Your Leak-Proof
Flow & Control Solution Partner

Hansun Engineering has been manufacturing tube fittings and valves for instrumentation, hydraulics, flow & control system, oil & gas E&P, refinery, petrochemical processing, shipbuilding & heavy industries, pulp & paper mill etc.
S-LOK® and S-LOK® may not be familiar, but we have been serving our customers for two decades and our technology is more than enough to compete with any other brands in the world.

Hansun Engineering has been focusing on a single goal “customer satisfaction” and has already established global networks in various industries including famous local (Korean) partners.

Hansun Engineering has been investing heavily in developing new technology and innovative products. We will continue to offer new solutions to various industries and satisfy various global needs.

Our quality policy is to provide the best quality products by satisfying customer’s requirements and each related rules & regulation through continuous quality innovation.

We have twenty-year history of creating values for our customers. We are committed to being your best leak-proof flow & control solution partner. We will do our best to create values for our partners.

Our Motto is Value Creation!
Your leak-proof flow & control solution partner, Hansun Engineering!

INDEX

Fittings

Valves

Valves

ETC



We Support Your Dreams!

Real champion is the person who are marking efforts day and night to be the best leader.
We also want to make our dreams come true in the world along with our valuable customers.

IN ANY INDUSTRIES

- Process instrumentation / Oil and Gas E&P
- Refinery & Petrochemical / Power Plant
- Shipbuilding / Semiconductor
- CNG Vehicles / LNG Terminal

IN ANY COUNTRIES

- North & South America
- Europe
- MENA(Middle East & North Africa)
- Asia
- Australia

WITH ANY SOLUTIONS

- High pressure / Vacuum
- High Temperature / Cryogenic
- Shock / Vibration Resistance
- Lifetime Warranty
- Availability of spare parts in worldwide

Your value creation partner through innovation of technologies is Hansun Engineering in Korea!

S-LOK
Compression Tube Fittings

The best partner for value creation
We support the innovations of customer

01

Catalogue No. S-LOK Mar.2024

Installation Instruction

- Fully insert the tube into the fitting and against the shoulder; tight the nut by finger-tightening.
(**Caution** : The tube may be elliptical or have burrs; foreign material on the surface and/or inside of the tube fitting).

- Mark the nut at the 6 o'clock position before placing the spanner.

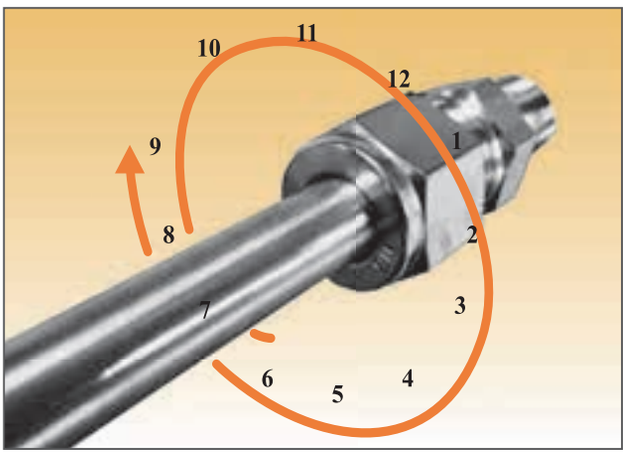

- While holding the fitting body steady, tight the nut with the spanner by turning 1-1/4 clockwise.
- Make sure that the spanner's starting point at 6 o'clock is being positioned at 9 o'clock after tightening 1-1/4 clockwise.
- Tighten the nut only 3/4 turn to the 3 o'clock position for 1/16″, 1/8″ and 3/16″(2mm, 3mm and 4mm) size tube fittings.
- When it was tightened 1-1/4 turn clockwise, the tube fitting has been designed to be endurable even from the bursting pressure of the tube, therefore insufficient tightening against the regulation may cause the leakage and bursting while over-tightening makes the reassembly difficult due to deformity.

Gaugeability

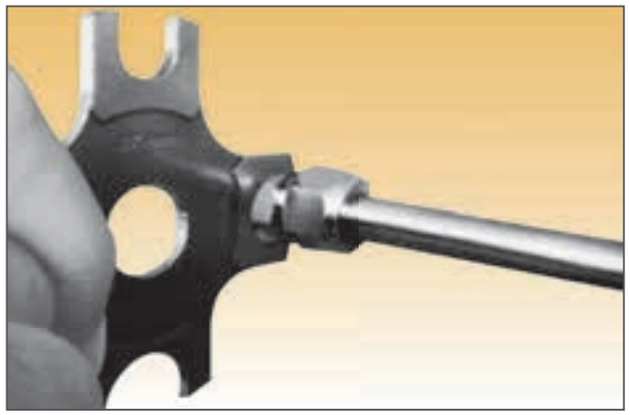

- Gap inspection gauge assures the installer or the inspector that the instrument has been sufficiently tightened during the first installation inspection.
- Place gap inspection gauge at the gap between the nut and body.
- When the gauge does not fit into the gap, it means that the fitting is sufficiently tightened.
- When the gauge fits into the gap, it means that it needs to be tightened more.

Reassembly Instruction

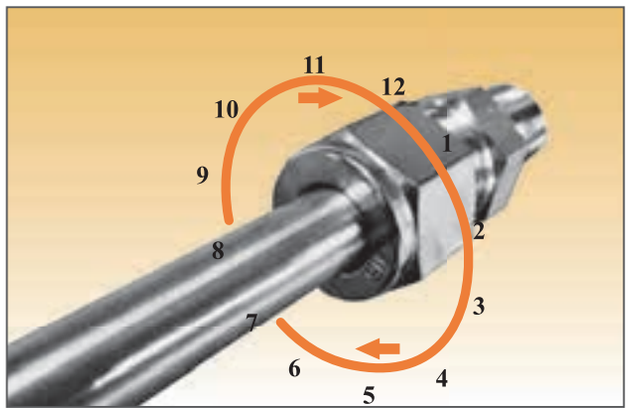

- S-LOK products can be disassembled and reassembled numerously.
- For reassembly, insert the tube with ferrules into the fitting until the front ferrule seats against the fitting body to avoid any damage from foreign objects at the disassembled area.
- After hand-tightening the nut while holding the fitting's body steady, tight the nut with a spanner to the previously pulled-up position.
- At this point, you would feel a significant increase in resistance.
- Then tight the nut slightly.

Introduction

S-LOK tube fittings are manufactured under very strict quality control to assure maximum reliable performance.
S-LOK tube fittings require no special tools assembly. Connections cam be quickly and easily made by simple insertion and tightening the nuts.
S-LOK tube fittings has been specifically designed for use on instrumentation, process and control systems and equipment employed in chemical, petroleum, power generating and pulp and paper plants.
S-LOK tube fittings could also be used in extensive applications of other fields where very high quality tube fittings are required.

Construction

S-LOK tube fittings are composed of four precision part ; body, nut, front ferrule and back ferrule.
By screwing the nut onto the body, the nut is tightened against the tapered area of the body, and its edge is compressed tightly against the tube by curling inward.
The back ferrule is also located between the body and nut.
As the front ferrule rolls, the back ferrule rolls up and bites into the tube resulting in the connection of tube and the fitting as well as a non-leakage effected.
The double ferrule design achieves the leak proof sealing by assembly motion being transmitted axially through the tubing. This results in no radial movement of the tubing upon assembly. Therefore, the tube is not stressed and the mechanical integrity is maintained. This is the result of close monitoring of tolerance control in machining, and hardness of each and every part of S-LOK tube fittings.
Through this swaging action, S-LOK tube fittings are mechanically integrated with the tube connected.

Materials

S-LOK tube fittings are made of stainless steel, brass and alloy steels.

Fitting Material	Bar Stock	Forging
Stainless Steel 316	ASTM A479 / A276 TYPE 316	ASTM A182 F316
Duplex Stainless Steel	ASTM A479 / A276 UNS S31803	A182 F51
Super Duplex Stainless Steel	ASTM A479 / A276 UNS S32750	A182 F53
Alloy 400	ASTM B164 UNS N04400	ASTM B564 UNS N04400
Alloy 625	ASTM B446 UNS N06625	ASTM B564 UNS N06625
Alloy 825	ASTM B425 UNS N08825	ASTM B564 UNS N08825
Alloy C-276	ASTM B574 UNS N10276	ASTM B564 UNS N10276
Carbon Steel	ASTM A108 JIS G4051 S45C	ASTM A105 JIS G4051 S45C
Brass	ASTM B16 C3600 JIS H3250 C3604	ASTM B124 C3770 JIS H3250 C3771

Pressure Ratings

S-LOK tube fittings are rated its maximum working pressure in accordance with the maximum working pressure of recommended tubing within this catalogue.

Tubing

Suitable tube selection is essential in performance of tubing system. For safe, reliable and leak-free seals tubing should Be considered as a fitting component. S-LOK tube fittings perform best when good quality tubing is used.
When selecting tubing material including size and wall thickness, customer must consider pressure, flow, temperature Environment and compatibility of system.

- General Rules.

1. For leak-free sealing, the tubing surface is very important. The tubing must have a good surface condition with free of scratches, draw mark, flat spots or dirt.
2. In case of welded tubing, it should not have a visible poor bead on its surface.
3. Tubing and fitting material is essential for the thermal compatibility and corrosion resistance.
4. Tubing must be softer than fitting material. When tubing and fittings are made of the same material, the metal tubing must be fully annealed.
5. Tubing hardness must be selected according to the information in the table 2 to 4.
6. Do not select a too thin or too thick wall. A too thin wall may collapse, and a too thick wall may mot properly be deformed by the ferrule action. Selection the wall's thickness should be based on the applicable pressure, temperature, shock and vibration.

- Consider the following in selecting tube.

1. Quality of the tubing material and manufacturing method.
2. Hardness of tube.
3. Surface treatment of tube.
4. O.D and tolerance.
5. Wall thickness and tolerance.
6. Concentricity of tube.
7. Ovality. (shape)

Temperature Ranges

The maximum and minimum operating temperatures for various tubing material.

Tubing Material	Temperature Range
Stainless Steel 316	-196˚C to 649˚C (-321˚F to 1200˚F)
Carbon Steel	-53˚C to 426˚C (-65˚F to 800˚F)
Copper	-40˚C to 204˚C (-40˚F to 400˚F)
Alloy 400	-198˚C to 426˚C (-324˚F to 800˚F)

Tubing Material	Temperature Range
Alloy 600	-130˚C to 649˚C (-205˚F to 1200˚F)
Alloy C-276	-195˚C to 537˚C (-320˚F to 1000˚F)
Titanium	-195˚C to 315˚C (-320˚F to 600˚F)
PTFE	-17˚C to 65˚C (0˚F to 150˚F)

Temperature De-rating Factors

The allowable working pressure is determined by various temperatures. To determine the working pressure at the specific temperatures, multiply the working pressure at ambient temperature and factor.

Temp ˚F(˚C)	Stainless Steel ASTM A269		Carbon Steel ASTM A179	Copper ASTM B75	Alloy 400
	304	316			
100 (37)	1.00	1.00	1.00	1.00	1.00
200 (93)	1.00	1.00	0.95	0.80	0.88
300 (148)	1.00	1.00	0.90	0.78	0.82
400 (204)	0.93	0.96	0.86	0.50	0.79
500 (260)	0.87	0.90	0.82	-	0.79
600 (315)	0.82	0.85	0.77	-	0.79
700 (370)	0.80	0.82	0.73	-	0.76
800 (426)	0.76	0.79	0.59	-	0.76
900 (480)	0.73	0.78	-	-	-
1000 (537)	0.69	0.76	-	-	-
1200 (649)	0.30	0.37	-	-	-

Example : Tube S316 3/8 O.D. x 0.035″ at 700 °F
3,300psi x 0.82=2.706psi
Therefore 2.706psi is the maximum allowable working pressure of S316 3/8″ O.D x 0.035″ wall tubing.

Stainless Steel Tubing

Fully annealed 304 or 316 high quality seamless steel tube to ASTM A269 or equivalent. Recommended Hardness : HRB 90 or less

Stainless Steel Fractional Tubing

Tube O.D (inch)	Tube Wall Thickness (inch)															
	0.010	0.012	0.014	0.016	0.020	0.028	0.035	0.049	0.065	0.083	0.095	0.109	0.120	0.134	0.156	0.188
1/16	5,600	6,800	8,100	9,400	12,000											
1/8						8,500	10,900					Working pressure (psig)				
3/16						5,400	7,000	10,200								
1/4						4,000	5,100	7,500	10,200							
5/16							4,000	5,800	8,000							
3/8							3,300	4,800	6,500	7500						
1/2							2,600	3,700	5,100	6,700						
5/8		For gas service, applying tube wall thickness should only be selected from the outside of the shaded boundary.						2,900	4,000	5,200	6,000					
3/4								2,400	3,300	4,200	4,900	5,800				
7/8								2,000	2,800	3,600	4,200	4,800				
1									2,400	3,100	3,600	4,200	4,700			
1-1/4										2,400	2,800	3,300	3,600	4,100	4,900	
1-1/2											2,300	2,700	3,000	3,400	4,000	4,900
2												2,000	2,200	2,500	2,900	3,600

Stainless Steel Metric Tubing

Tube O.D (mm)	Tube Wall Thickness (mm)														
	0.3	0.8	1.0	1.2	1.5	1.8	2.0	2.2	2.5	2.8	3.0	3.5	4.0	4.5	5.0
2	210	660													
3		670									Working pressure (bar)				
4		500	660												
6		310	420	540	710										
8			310	390	520										
10			240	300	400	510	580								
12			200	250	330	410	470								
14			160	200	270	340	380	430							
15			150	190	250	310	360	400							
16				170	230	290	330	370	400						
18				150	200	260	290	320	370						
20				140	180	230	260	290	330	380					
22				140	180	200	230	260	300	340					
25						180	200	230	260	290	320				
28							180	200	230	260	280	330			
30		For gas service, applying tube wall thickness should only be selected from the outside of the shaded boundary.					170	180	210	240	260	310			
32							160	170	200	220	240	290	330		
38								140	160	190	200	240	270	310	
50											150	180	210	240	270

- Working pressure are based on allowable stress value of 20,000psi (137,800kPa) as specified in ASME B31.3 within the temperature range of -29°C to 37°C (-20°F to 100°F), considering ultimate tensile strength 75,000psi (516,700kPa).
- Pressure calculation are based on Maximum O.D and minimum wall thickness and no allowance is made for corrosion and erosion.
- Welded tubing Based on ASME B31.3 for weld integrity, a de-rating factor must be applied to welded tubing.
  For double butt seam tubing, multiply by 0.85, For single butt seam tubing, multiply by 0.80.

Carbon Steel Tubing

Soft annealed seamless carbon steel tube to ASTM A179 or equivalent. Recommended Hardness : HRB 72 or less

Carbon Steel Fractional Tubing

Tube O.D (inch)	Tube Wall Thickness (inch)													
	0.020	0.028	0.035	0.049	0.065	0.083	0.095	0.109	0.120	0.134	0.148	0.165	0.180	0.220
1/16	9,700													
1/8		8,000	10,200								Working pressure (psig)			
3/16		5,100	6,600	9,600										
1/4		3,700	4,800	7,000	9,600									
5/16			3,700	5,500	7,500									
3/8			3,100	4,500	6,200									
1/2			2,300	3,200	4,500	5,900								
5/8			1,800	2,600	3,500	4,600	5,300							
3/4				2,100	2,900	3,700	4,300	5,100						
7/8	For gas service, applying tube wall thickness should only be selected from the outside of the shaded boundary.			1,800	2,400	3,200	3,700	4,300						
1				1,500	2,100	2,700	3,200	3,700	4,100					
1-1/4					1,600	2,100	2,500	2,900	3,200	3,600	4,000	4,600	5,000	
1-1/2						1,800	2,000	2,400	2,600	2,900	3,300	3,700	4,100	5,100
2							1,500	1,700	1,900	2,100	2,400	2,700	3,000	3,700

Carbon Steel Metric Tubing

Tube O.D (mm)	Tube Wall Thickness (mm)												
	0.8	1.0	1.2	1.5	1.8	2.0	2.2	2.5	2.8	3.0	3.5	4.0	4.5
3	630	790											
6	290	370	460	590						Working pressure (bar)			
8		270	330	430									
10		210	260	330									
12		170	210	270	330	380	420						
14		150	180	230	280	320	350						
15		140	170	210	260	290	330						
16		130	150	200	240	270	300	350					
18			140	170	210	240	270	310					
20			120	160	190	210	240	270	310				
22			110	140	170	190	210	240	280				
25			100	120	150	170	180	210	240	260			
28	For gas service, applying tube wall thickness should only be selected from the outside of the shaded boundary.					150	160	190	210	230	270		
30						140	150	170	200	210	250		
32						130	140	160	180	200	230	270	
38							120	130	150	160	190	230	260

- Working pressure are based on allowable stress value of 15,700psi (108,2000kPa) as specified in ASME B31.3 within the temperature range of -29°C to 37°C (-20°F to 100°F), considering ultimate tensile strength 47,000psi (324,000kPa).
- Pressure calculation are based on Maximum O.D and minimum wall thickness and no allowance is made for corrosion and erosion.

Copper Tubing

High quality soft annealed seamless copper tube to ASTM B75 or equivalent. Recommended Hardness : HRB60 or less

Copper Fractional Tubing

Tube O.D (inch)	Tube Wall Thickness (inch)								
	0.028	0.030	0.035	0.049	0.065	0.083	0.095	0.109	0.120
1/8	2,700	3,000	3,600						
3/16	1,800	1,900	2,300	3,400			Working pressure (psig)		
1/4	1,300	1,400	1,600	2,500	3,500				
5/16			1,300	1,900	2,700				
3/8			1,000	1,600	2,200				
1/2			800	1,100	1,600	2,100			
5/8	For gas service, applying tube wall thickness should only be selected from the outside of the shaded boundary.			900	1,200	1,600	1,900		
3/4				700	1,000	1,300	1,500	1,800	
7/8				600	800	1,100	1,300	1,500	
1				500	700	900	1,100	1,300	1,500

Copper Metric Tubing

Tube O.D (mm)	Tube Wall Thickness (mm)									
	0.8	1.0	1.2	1.5	1.8	2.0	2.2	2.5	2.8	3.0
3	200									
4	140	200						Working pressure (bar)		
6	110	140	170	220						
8		100	120	160						
10		80	100	130						
12		60	80	100	130	140				
14		50	60	90	110	120				
15			60	80	100	110	120			
16				70	90	100	110	120		
18				60	80	90	100	110		
20	For gas service, applying tube wall thickness should only be selected from the outside of the shaded boundary.			60	70	80	90	100	110	
22				50	60	70	80	90	100	
25				40	50	60	70	80	90	100
28					40	50	60	70	80	90

- Working pressure are based on allowable stress value of 6,000psi (41,300kPa) as specified in ASME B31.3 within the temperature range of -29°C to 37°C (-20°F to 100°F), considering ultimate tensile strength 30,000psi (206,700kPa).
- Pressure calculation are based on Maximum O.D and minimum wall thickness and no allowance is made for corrosion and erosion.

Alloy 400 Tubing

Fully annealed seamless Alloy 400 tube to ASTM B165 or equivalent. Recommended Hardness : HRB 75 or less

Alloy 400 Fractional Tubing

Tube O.D (inch)	Tube Wall Thickness (inch)							
	0.028	0.035	0.049	0.065	0.083	0.095	0.109	0.120
1/8	7,900	10,100						
3/16	5,100	6,500	9,500			Working pressure (psig)		
1/4	3,700	4,800	7,000	9,500				
5/16		3,700	5,400	7,300				
3/8		3,100	4,400	6,100				
1/2		2,300	3,200	4,400				
5/8	For gas service, applying tube wall thickness should only be selected from the outside of the shaded boundary.		2,700	3,700	4,800	5,600		
3/4			2,200	3,000	4,000	4,600		
7/8			1,900	2,600	3,400	3,900	4,500	
1				2,200	2,900	3,400	3,900	4,300

Alloy 400 Metric Tubing

Tube O.D (mm)	Tube Wall Thickness (mm)									
	0.8	1.0	1.2	1.5	1.8	2.0	2.2	2.5	2.8	3.0
3	630									
4	400						Working pressure (bar)			
6	310	390	490	620						
8		290	350	450						
10		220	280	350						
12		180	230	290						
14		180	190	240	270					
15			190	240	290	330	330			
16			170	220	270	310	320			
18			150	200	240	270	300			
20	For gas service, applying tube wall thickness should only be selected from the outside of the shaded boundary.			180	210	240	270	290		
22				170	200	230	250	290	310	
25					170	190	210	240	270	290
28										

- Working pressure are based on allowable stress value of 20,000psi (137,800kPa) as specified in ASME B31.3 within the temperature range of -29°C to 37°C (-20°F to 100°F), considering ultimate tensile strength 70,000psi (482,300kPa).
- Pressure calculation are based on Maximum O.D and minimum wall thickness and no allowance is made for corrosion and erosion.

Special Alloy Tubing

When special alloy tubing is selected, we recommend:
Full annealed seamless (or welded and cold-drawn, where permitted) alloy tubing to the ASTM specification as shown below.
Tubing should be free of scratches for bending of flaring.

Tube Material	ASTM code	MAX. Hardness
Alloy C-276	B622	HRB 100
Alloy 20	B729	HRB 95
Alloy 600	B167	HRB 92

Tube Material	ASTM code	MAX. Hardness
Alloy 625	B444	HRC 25
Alloy 825	B163	HR15T 90
Alloy 6Mo	A269	HRB 96

Cryogenic Service

S-LOK tube fittings in 316 stainless steel provide highly reliable performance from cryogenic temperatures to high temperature levels. 316 stainless steel temperature range : -196°C to 649°C (-321°F to 1200°F).
Cryogenic temperature are considered to be temperatures below : -73°C (-100°F)

Proper Tube Handling

Good handling practices can greatly save the good surface finish of the supplied tube.

- Tubing should never be dragged out of a tubing rack.
- Tubing should never be dragged across cement, asphalt, gravel or any other rough surface.
- Tubing cutter wheel and hacksaw blade should always be sharp.
- Try not to take deep cuts with each turn of the cutter or stroke of the saw.
- Tube end should always be de burred.
- Tubing should be stored to avoid collection of dirt and contamination.
- If possible, tubing ends should be plugged, so any foreign materials will not fall inside.

Tube Bending

For sealing installation in case of bended tubing being near S-LOK fittings, there should be enough lineal distance from bending point to the fittings. When tube bend is too close to the fitting, the deformed section of the bend may enter the fitting, and it may result in leaking. Also the bending radius should not be too short of bending radius may affect the working pressure and may cause insufficient flow. Minimum bending radius is usually recommended by the bending manufacturer.

Tube O.D (T) (inch)	Straight Length (L)
1/16	1/2
1/8	23/32
3/16	3/4
1/4	13/16
5/16	7/8
3/8	15/16
1/2	1-3/16
5/8	1-1/4
3/4	1-1/4
7/8	1-5/16
1	1-1/2
1-1/4	2
1-1/2	2-13/32
2	3-1/4

Tube O.D (T) (mm)	Straight Length (L)
3	19
6	21
8	23
10	25
12	31
14	32
15	32
16	32
18	32
20	34
22	40
25	46
28	50
32	54
38	63
50	80

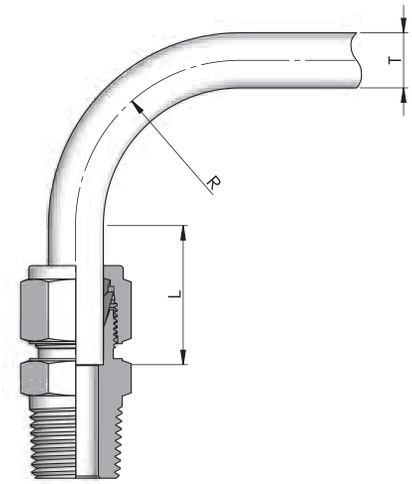

T : Tube O.D
R : Radius
Follow the bented tube vendor's recommendation.
L : Straight tubing length is required from the beginning of the bend to the tubing end.

Pressure Rating

Many S-LOK tube fittings have a male or female pipe end. These ends occasionally have a lower pressure rating than the pressure rating of the tube fitting end so consider both of the rating.

NPT/ISO Pipe Size (inch)	Stainless Steel 316				Brass				Carbon Steel			
	Male		Female		Male		Female		Male		Female	
	psig	bar	psig	bar	psig	bar	psig	bar	psig	bar	psig	bar
1/16	11,000	758	6,700	462	5,500	378	3,300	227	11,000	758	6,700	462
1/8	10,000	689	6,500	448	5,000	345	3,200	221	10,000	689	6500	448
1/4	8,000	551	6,600	455	4,000	276	3,300	227	8,000	551	6,600	455
3/8	7,800	538	5,300	365	3,900	269	2,600	179	7,800	538	5,300	365
1/2	7,700	531	4,900	338	3,800	262	2,400	165	7,700	531	4,900	338
3/4	7,300	503	4,600	317	3,600	248	2,300	159	7,300	503	4,600	317
1	5,300	365	4,400	303	2,600	179	2,200	152	5,300	365	4,400	303
1-1/4	6,000	414	5,000	345	3,000	207	2,500	172	6,000	414	5,000	345
1-1/2	5,000	345	4,600	317	2,500	172	2,300	159	5,000	345	4,600	317
2	3,900	269	3,900	269	1,900	131	1,900	131	3,900	269	3,900	269

- The ratings shown above and based on ASME B31.3.
- Female pipe ends have lower ratings than male pipe in a given size due to the inner and outer diameters of female threads being larger than those of male pipe ends.
- The ratings shown above are reference only.

Pipe Thread Sealant

Pipe thread sealant is essential to ensure leak-free seal. Since the PTFE tape is commonly used, we provide information of recommended tape width, as well as the numbers of thread to be wrapped. The PTFE tape fills the voids between threads and prevents galling on pipe threads. The sealant usually contains a lubricant.

Nominal Pipe Size	Recommended Tape Width	Effective Thread External Length (L)	Approx. of Thread
1/8	1/8 – 1/4	0.2639	7
1/4	1/4	0.4018	7-1/4
3/8	1/4	0.4075	7-1/3
1/2	1/4 – 1/2	0.5337	7-1/2
3/4	1/4 – 1/2	0.5457	7-2/3
1	1/4 – 1/2	0.6828	8

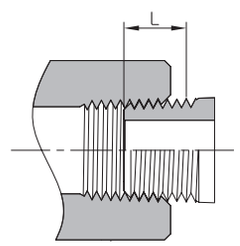

Elastomer Seal Temperature Rating

When elastomer seal is used in the fitting, care must be taken for allowable working temperature.

Elastomer Seal Material	Temperature Range
NBR	-20°C ~ 105°C (-4°F ~ 221°F)
FKM	-28°C ~ 204°C (-20°F ~ 400°F)
EPDM	-28°C ~ 148°C (-20°F ~ 300°F)
FFKM	-25°C ~ 275°C (-13°F ~ 527°F)

Ordering Information

The symbols in the part number column on each page represent the shape and size of individual fittings.

Example 1 : Tube to Pipe ends

SMC - 4 - 4R - S6

- S-LOK Tube Fitting (Double Ferrule)
- Name of Fitting (Male Connector)
- Tube O.D Designations (1/4″ O.D)
- Pipe Thread Designations(1/4)
- Thread symbol (PT)
- Material Designator

Example 2 : Tube to Tube ends

ST - 4 - S6

- S-LOK Tube Fitting (Double Ferrule)
- Name of Fitting (Male Connector)
- Tube O.D Designations (1/4″ O.D)
- Material Designator

Example 3 : Tee & Cross Tee & Cross are described by first the run (1 and 2) and next the branch (3 and 4)

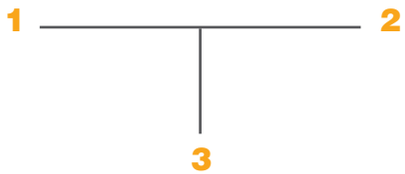

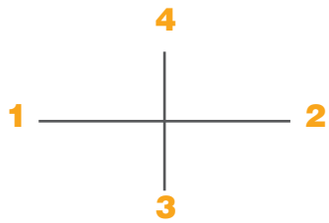

Example 4 : Single Ferrule type To order, use “O” as a suffix to the desired type of fitting ordering designation.

SMCO - 4 - 4R - S6 **STO - 4 - S6**

Tube O.D Designator			
Inch	Identifier	Metric	Identifier
1/16	1	3mm	3M
1/8	2	4mm	4M
3/16	3	6mm	6M
1/4	4	8mm	8M
5/16	5	10mm	10M
3/8	6	12mm	12M
1/2	8	14mm	14M
5/8	10	15mm	15M
3/4	12	16mm	16M
7/8	14	20mm	20M
1	16	22mm	22M
1-1/4	20	25mm	25M
1-1/2	24	28mm	28M
2	32	32mm	32M
		38mm	38M
		50mm	50M

Pipe Thread Size Designator			
Nominal Pipe Size	Identifier	Nominal Pipe Size	Identifier
1/8	2	1	16
1/4	4	1-1/4	20
3/8	6	1-1/2	24
1/2	8	2	32
3/4	12		

Fitting Material Designator	
Body Material	Identifier
Stainless Steel 316	S6
Stainless Steel 316L	S6L
Stainless Steel 304	S4
Carbon Steel	CS
Brass	BS
Alloy 400	A400
Alloy 625	A625

Type	Taper Threads		Parallel Threads	
Symbol	R	N	G	U
Specification	ISO 7/1, BS21 (BSPT) JIS B 0203 (PT) DIN 2999	ASME B 1.20.1 (NPT)	ISO 228/1 BS 2779 (BSPP) JIS B 0202 (PF)	ASME B 1.1

Tube to Tube Union

Tube to Male Pipe

Tube to Female Pipe

Stub Tube Connector

Tube to AN Tube

Tube to SAE O-Ring Seal

Tube to Weld End

Tube to Flange

Plug and Cap

Spare Parts

ETC

Union

SU

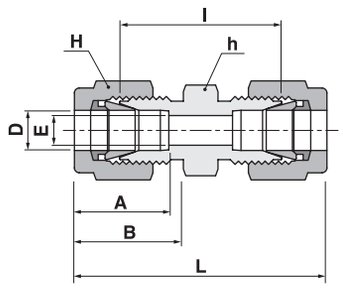

Connects fractional tube

Part No.	Tube O.D D		E	Width across flat h		H		A	B	I	L
	in	mm	Min	in	mm	in	mm				
SU-1	1/16	1.59	1.27	5/16	7.93	5/16	7.93	8.63	10.92	17.50	25.15
SU-2	1/8	3.17	2.28	7/16	11.11	7/16	11.11	12.70	15.24	22.35	35.56
SU-3	3/16	4.76	3.04	7/16	11.11	1/2	12.70	13.71	16.00	24.13	37.33
SU-4	1/4	6.35	4.82	1/2	12.70	9/16	14.28	15.24	17.78	26.16	40.89
SU-5	5/16	7.93	6.35	9/16	14.28	5/8	15.87	16.25	18.54	28.19	42.92
SU-6	3/8	9.52	7.11	5/8	15.87	11/16	17.46	16.76	19.30	30.22	44.95
SU-8	1/2	12.70	10.41	13/16	20.64	7/8	22.22	22.86	21.84	30.98	51.30
SU-10	5/8	15.87	12.70	15/16	23.81	1	25.40	24.38	21.84	31.75	52.07
SU-12	3/4	19.05	15.74	1-1/16	26.98	1-1/8	28.58	24.38	21.84	33.27	53.89
SU-14	7/8	22.22	18.28	1-3/16	30.16	1-1/4	31.75	25.90	21.84	35.05	55.37
SU-16	1	25.40	22.35	1-3/8	34.92	1-1/2	38.10	31.24	26.41	40.38	64.77
SU-20	1-1/4	31.75	27.68	1-3/4	44.45	1-7/8	47.63	41.14	38.86	48.00	92.20
SU-24	1-1/2	38.10	34.03	2-1/8	53.97	2-1/4	57.15	50.03	45.21	53.60	107.95
SU-32	2	50.80	45.97	2-3/4	69.85	3	76.20	67.56	62.73	74.70	149.35

Connects metric tube

Part No.	Tube O.D D	E Min	Width across flat h	H	A	B	I	L
SU-2M	2	1.7	12	12	12.9	15.3	22.1	35.6
SU-3M	3	2.4	12	12	12.9	15.3	22.1	35.3
SU-4M	4	2.4	12	12	13.7	16.1	24.1	37.3
SU-6M	6	4.8	14	14	15.3	17.7	26.2	41.0
SU-8M	8	6.4	15	16	16.2	18.6	28.2	43.2
SU-10M	10	7.9	18	19	17.2	19.5	31.0	46.2
SU-12M	12	9.5	22	22	22.8	22.0	31.0	51.2
SU-15M	15	11.9	24	25	24.4	22.0	31.8	52.0
SU-16M	16	12.7	24	25	24.4	22.0	31.8	52.0
SU-18M	18	15.1	27	30	24.4	22.0	33.3	53.5
SU-20M	20	15.9	30	32	26.0	22.0	34.8	55.0
SU-22M	22	18.3	30	32	26.0	22.0	34.8	55.0
SU-25M	25	21.8	35	38	31.3	26.5	40.4	65.0
SU-28M	28	21.8	41	46	36.6	36.6	43.4	85.0
SU-32M	32	28.6	46	50	42.0	41.6	51.3	97.3
SU-38M	38	33.7	55	60	49.4	47.9	58.4	113.6

Union Elbow

SL

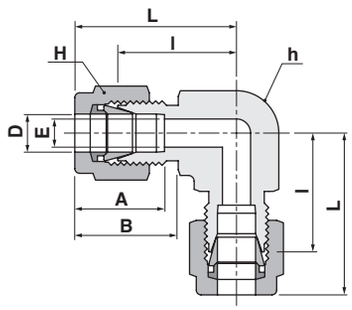

Connects fractional tube

Part No.	Tube O.D D		E	Width across flat h		H		A	B	I	L
	in	mm	Min	in	mm	in	mm				
SL-1	1/16	1.59	1.27	3/8	9.52	5/16	7.93	8.63	10.92	14.00	17.88
SL-2	1/8	3.17	2.28	3/8	9.52	7/16	11.11	12.70	15.24	15.74	22.35
SL-3	3/16	4.76	3.04	1/2	12.70	1/2	12.70	13.71	16.00	17.78	24.35
SL-4	1/4	6.35	4.82	1/2	12.70	9/16	14.28	15.24	17.78	19.55	26.92
SL-5	5/16	7.93	6.35	9/16	14.28	5/8	15.87	16.25	18.54	21.33	28.70
SL-6	3/8	9.52	7.11	5/8	15.87	11/16	17.46	16.76	19.30	23.11	30.48
SL-8	1/2	12.70	10.41	13/16	20.64	7/8	22.22	22.86	21.84	25.90	36.06
SL-10	5/8	15.87	12.70	15/16	23.81	1	25.40	24.38	21.84	28.70	38.80
SL-12	3/4	19.05	15.74	1-1/16	26.98	1-1/8	28.58	24.38	21.84	29.71	39.87
SL-14	7/8	22.22	18.28	1-1/4	31.75	1-1/4	31.75	25.90	21.84	34.54	44.70
SL-16	1	25.40	22.35	1-3/8	34.92	1-1/2	38.10	31.24	26.41	36.83	49.02
SL-20	1-1/4	31.75	27.68	1-11/16	42.86	1-7/8	47.63	41.14	38.86	44.50	66.54
SL-24	1-1/2	38.10	34.03	2	50.80	2-1/4	57.15	50.03	45.21	50.80	77.97
SL-32	2	50.80	45.97	2-3/4	69.85	3	76.20	67.56	62.73	69.80	107.18

Connects metric tube

Part No.	Tube O.D D	E Min	Width across flat h	H	A	B	I	L
SL-2M	2	1.7	9.5	12	12.9	15.3	15.7	22.3
SL-3M	3	2.4	9.5	12	12.9	15.3	15.7	22.3
SL-4M	4	2.4	12.7	12	13.7	16.1	18.8	25.4
SL-6M	6	4.8	12.7	14	15.3	17.7	19.6	27.0
SL-8M	8	6.4	14.3	16	16.2	18.6	21.3	28.8
SL-10M	10	7.9	17.5	19	17.2	19.5	23.9	31.5
SL-12M	12	9.5	20.6	22	22.8	22.0	25.9	36.0
SL-15M	15	11.9	23.8	25	24.4	22.0	28.7	38.8
SL-16M	16	12.7	23.8	25	24.4	22.0	28.7	38.8
SL-18M	18	15.1	27.0	30	24.4	22.0	29.7	39.8
SL-20M	20	15.9	31.8	32	26.0	22.0	34.5	42.6
SL-22M	22	18.3	31.8	32	26.0	22.0	34.5	42.6
SL-25M	25	21.8	34.9	38	31.3	26.5	36.8	49.1
SL-28M	28	21.8	41.0	46	36.6	36.6	43.2	64.0
SL-32M	32	28.6	46.0	50	42.0	41.6	49.3	72.3
SL-38M	38	33.7	55.0	60	49.4	47.9	56.4	84.0

Reducing Union

SUR

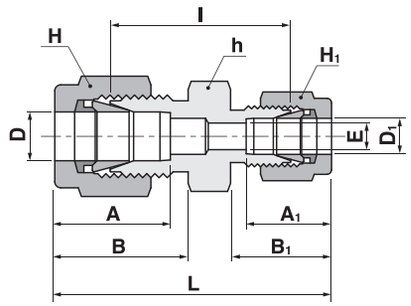

Connects fractional tube

Part No.	Tube O.D				E	Width across flat						A	A_1	B	B_1	I	L
	D		D_1			h		H		H_1							
	in	mm	in	mm	Min	in	mm	in	mm	in	mm						
SUR-2-1	1/8	3.17	1/16	1.59	1.27	7/16	11.11	7/16	11.11	5/16	7.93	12.70	8.63	15.24	10.92	20.60	30.91
SUR-3-1	3/16	4.76	1/16	1.59	1.27	7/16	11.11	1/2	12.70	5/16	7.93	13.71	8.63	16.00	10.92	21.84	32.25
SUR-3-2	3/16	4.76	1/8	3.17	2.28	7/16	11.11	1/2	12.70	7/16	11.11	13.71	12.70	16.00	15.24	23.36	36.57
SUR-4-1	1/4	6.35	1/16	1.59	1.27	1/2	12.70	9/16	14.28	5/16	7.93	15.24	8.63	17.78	10.92	23.11	34.29
SUR-4-2	1/4	6.35	1/8	3.17	2.28	1/2	12.70	9/16	14.28	7/16	11.11	15.24	12.70	17.78	15.24	24.63	38.60
SUR-4-3	1/4	6.35	3/16	4.76	3.04	1/2	12.70	9/16	14.28	1/2	12.70	15.24	13.71	17.78	16.00	25.40	39.37
SUR-5-2	5/16	7.93	1/8	3.17	2.28	9/16	14.28	5/8	15.87	7/16	11.11	16.25	12.70	18.54	15.24	25.90	39.87
SUR-5-4	5/16	7.93	1/4	6.35	4.82	9/16	14.28	5/8	15.87	9/16	14.28	16.25	15.24	18.54	17.78	27.43	42.16
SUR-6-1	3/8	9.52	1/16	1.59	1.27	5/8	15.87	11/16	17.46	5/16	7.93	16.76	8.63	19.30	10.92	25.40	36.57
SUR-6-2	3/8	9.52	1/8	3.17	2.28	5/8	15.87	11/16	17.46	7/16	11.11	16.76	12.70	19.30	15.24	26.92	40.89
SUR-6-4	3/8	9.52	1/4	6.35	4.82	5/8	15.87	11/16	17.46	9/16	14.28	16.76	15.24	19.30	17.78	28.44	43.18
SUR-6-5	3/8	9.52	5/16	7.93	6.35	5/8	15.87	11/16	17.46	5/8	15.87	16.76	16.25	19.30	18.54	29.46	44.19
SUR-8-2	1/2	12.70	1/8	3.17	2.28	13/16	20.64	7/8	22.22	7/16	11.11	22.86	12.70	21.84	15.24	28.44	45.21
SUR-8-4	1/2	12.70	1/4	6.35	4.82	13/16	20.64	7/8	22.22	9/16	14.28	22.86	15.24	21.84	17.78	29.46	46.99
SUR-8-6	1/2	12.70	3/8	9.52	7.11	13/16	20.64	7/8	22.22	11/16	17.46	22.86	16.76	21.84	19.30	30.98	48.51
SUR-10-6	5/8	15.87	3/8	9.52	7.11	15/16	23.81	1	25.40	11/16	17.46	24.38	16.76	21.84	19.30	31.75	49.27
SUR-10-8	5/8	15.87	1/2	12.70	10.41	15/16	23.81	1	25.40	7/8	22.22	24.38	22.86	21.84	21.84	31.75	52.07
SUR-12-4	3/4	19.05	1/4	6.35	4.82	1-1/16	26.98	1-1/8	28.58	9/16	14.28	24.38	15.24	21.84	17.78	31.75	49.27
SUR-12-6	3/4	19.05	3/8	9.52	7.11	1-1/16	26.98	1-1/8	28.58	11/16	17.46	24.38	16.76	21.84	19.30	33.27	50.80
SUR-12-8	3/4	19.05	1/2	12.70	10.41	1-1/16	26.98	1-1/8	28.58	7/8	22.22	24.38	22.86	21.84	21.84	33.27	53.59
SUR-12-10	3/4	19.05	5/8	15.87	12.70	1-1/16	26.98	1-1/8	28.58	1	25.40	24.38	24.38	21.84	21.84	33.27	53.59
SUR-16-8	1	25.40	1/2	12.70	10.41	1-3/8	34.92	1-1/2	38.10	7/8	22.22	31.24	22.86	26.41	21.84	40.89	63.24
SUR-16-12	1	25.40	3/4	19.05	15.74	1-3/8	34.92	1-1/2	38.10	1-1/8	28.58	31.24	24.38	26.41	21.84	40.38	62.73

Reducing Union

SUR

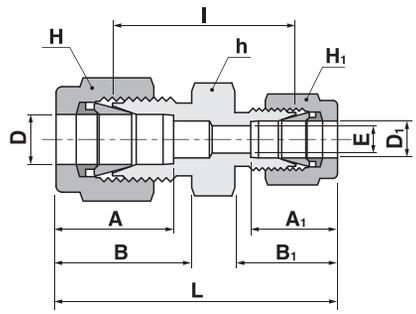

Connects metric tube

Part No.	Tube O.D		E	Width across flat			A	A_1	B	B_1	I	L
	D	D_1		h	H	H_1						
SUR-3M-2M	3	2	1.7	12	12	12	12.9	12.9	15.3	15.3	22.1	35.3
SUR-6M-2M	6	2	1.7	14	14	12	15.3	12.9	17.7	15.3	24.6	38.6
SUR-6M-3M	6	3	2.4	14	14	12	15.3	12.9	17.7	15.3	24.6	38.6
SUR-6M-4M	6	4	2.4	14	14	12	15.3	13.7	17.7	16.1	25.4	39.4
SUR-8M-6M	8	6	4.8	15	16	14	16.2	15.3	18.6	17.7	27.4	42.3
SUR-10M-6M	10	6	4.8	18	19	14	17.2	15.3	19.5	17.7	29.5	44.5
SUR-10M-8M	10	8	6.4	18	19	16	17.2	16.2	19.5	18.6	30.3	45.1
SUR-12M-6M	12	6	4.8	22	22	14	22.8	15.3	22.0	17.7	29.5	47.0
SUR-12M-8M	12	8	6.4	22	22	16	22.8	16.2	22.0	18.6	30.2	47.8
SUR-12M-10M	12	10	7.9	22	22	19	22.8	17.2	22.0	19.5	31.0	48.7
SUR-16M-10M	16	10	7.9	24	25	19	24.4	17.2	22.0	19.5	31.8	49.5
SUR-16M-12M	16	12	9.5	24	25	22	24.4	22.8	22.0	22.0	31.8	52.0
SUR-18M-12M	18	12	9.5	27	30	22	24.4	22.8	22.0	22.0	33.3	53.5
SUR-25M-18M	25	18	15.1	35	38	30	31.3	24.4	26.5	22.0	38.6	61.0
SUR-25M-20M	25	20	15.9	35	38	32	31.3	26.0	26.5	22.0	39.9	62.3

Connects metric tube to fractional tube

Part No.	Tube O.D			E	Width across flat			A	A_1	B	B_1	I	L
	D	D_1			h	H	H_1						
		in	mm	Min									
SUR-3M-2	3	1/8	3.17	2.4	12	12	11.1	12.9	12.8	15.3	15.2	22.1	35.2
SUR-4M-2	4	1/8	3.17	2.4	12	12	11.1	13.7	12.8	16.1	15.2	23.4	36.5
SUR-4M-4	4	1/4	6.35	2.4	14	12	14.3	13.7	15.3	16.1	17.7	25.4	39.4
SUR-6M-2	6	1/8	3.17	2.4	14	14	11.1	15.3	12.8	17.7	15.2	24.6	38.5
SUR-6M-4	6	1/4	6.35	4.8	14	14	14.3	15.3	15.8	17.7	17.7	26.2	41.0
SUR-6M-5	6	5/16	7.93	4.8	14	14	15.9	15.3	16.2	17.7	18.6	27.4	42.3
SUR-8M-4	8	1/4	6.35	4.8	15	16	14.3	16.2	15.3	18.6	17.7	27.4	42.3
SUR-10M-2	10	1/8	3.17	2.4	18	19	11.1	17.2	12.8	19.5	15.2	27.7	41.8
SUR-10M-4	10	1/4	6.35	4.8	18	19	14.3	17.2	15.3	19.5	17.7	29.5	44.5
SUR-10M-5	10	5/16	7.93	6.4	18	19	15.9	17.2	16.2	19.5	18.6	30.3	45.1
SUR-10M-6	10	3/8	9.52	7.1	18	19	17.5	17.2	16.9	19.5	18.6	31.0	45.9
SUR-12M-5	12	5/16	7.93	6.4	22	22	15.9	22.8	16.2	22.0	18.6	30.2	47.8
SUR-12M-6	12	3/8	9.52	7.1	22	22	17.5	22.8	16.9	22.0	19.2	31.0	48.4
SUR-12M-8	12	1/2	12.70	9.5	22	22	22.2	22.8	22.8	22.0	22.0	31.0	51.2
SUR-15M-8	15	1/2	12.70	10.3	24	25	22.2	24.4	22.8	22.0	22.0	31.8	52.0
SUR-16M-10	16	5/8	19.05	12.7	24	25	25.4	24.4	24.4	22.0	22.0	31.8	52.0
SUR-18M-12	18	3/4	19.05	15.1	27	30	28.6	24.4	24.4	22.0	22.0	33.3	53.5
SUR-20M-12	20	3/4	19.05	15.9	30	32	28.6	26.0	24.4	22.0	22.0	34.8	54.9
SUR-20M-16	20	1	25.40	15.9	34.9	32	38.1	26.0	31.2	22.0	26.4	38.0	60.3
SUR-22M-16	22	1	25.40	18.3	34.9	32	38.1	26.0	31.2	22.0	26.4	38.2	60.3

Union Tee

ST

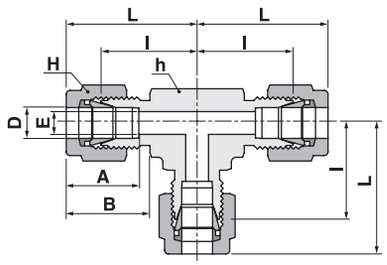

Connects fractional tube

Part No.	Tube O.D D		E	Width across flat h		Width across flat H		A	B	I	L
	in	mm	Min.	in	mm	in	mm				
ST-1	1/16	1.59	1.27	3/8	9.52	5/16	7.93	8.63	10.92	14.00	17.88
ST-2	1/8	3.17	2.28	3/8	9.52	7/16	11.11	12.70	15.24	15.74	22.35
ST-3	3/16	4.76	3.04	1/2	12.70	1/2	12.70	13.71	16.00	17.78	24.35
ST-4	1/4	6.35	4.82	1/2	12.70	9/16	14.28	15.24	17.78	19.55	26.92
ST-5	5/16	7.93	6.35	9/16	14.28	5/8	15.87	16.25	18.54	21.33	28.70
ST-6	3/8	9.52	7.11	5/8	15.87	11/16	17.46	16.76	19.30	23.11	30.48
ST-8	1/2	12.70	10.41	13/16	20.64	7/8	22.22	22.86	21.84	25.90	36.06
ST-10	5/8	15.87	12.70	15/16	23.81	1	25.40	24.38	21.84	28.70	38.80
ST-12	3/4	19.05	15.74	1-1/16	26.98	1-1/8	28.58	24.38	21.84	29.71	39.87
ST-14	7/8	22.22	18.28	1-1/4	31.75	1-1/4	31.75	25.90	21.84	34.54	44.70
ST-16	1	25.40	22.35	1-3/8	34.92	1-1/2	38.10	31.24	26.41	36.83	49.02
ST-20	1-1/4	31.75	27.68	1-11/16	42.86	1-7/8	47.63	41.14	38.86	44.50	66.54
ST-24	1-1/2	38.10	34.03	2	50.80	2-1/4	57.15	50.03	45.21	50.80	77.97
ST-32	2	50.80	45.97	2-3/4	69.85	3	76.20	67.56	62.73	69.80	107.18

Connects metric tube

Part No.	Tube O.D D	E Min.	Width across flat h	Width across flat H	A	B	I	L
ST-2M	2	1.7	9.5	12	12.9	15.3	15.7	22.3
ST-3M	3	2.4	9.5	12	12.9	15.3	15.7	22.3
ST-4M	4	2.4	12.7	12	13.7	16.1	18.8	25.4
ST-6M	6	4.8	12.7	14	15.3	17.7	19.6	27.0
ST-8M	8	6.4	14.3	16	16.2	18.6	21.3	28.8
ST-10M	10	7.9	17.5	19	17.2	19.5	23.9	31.5
ST-12M	12	9.5	20.6	22	22.8	22.0	25.9	36.0
ST-15M	15	11.9	23.8	25	24.4	22.0	28.7	38.8
ST-16M	16	12.7	23.8	25	24.4	22.0	28.7	38.8
ST-18M	18	15.1	27.0	30	24.4	22.0	29.7	39.8
ST-20M	20	15.9	31.8	32	26.0	22.0	34.5	42.6
ST-22M	22	18.3	31.8	32	26.0	22.0	34.5	42.6
ST-25M	25	21.8	34.9	38	31.3	26.5	36.8	49.1
ST-28M	28	21.8	41.0	46	36.6	36.6	43.2	64.0
ST-32M	32	28.6	46.0	50	42.0	41.6	49.3	72.3
ST-38M	38	33.7	55.0	60	49.4	47.9	56.4	84.0

Union Cross

SX

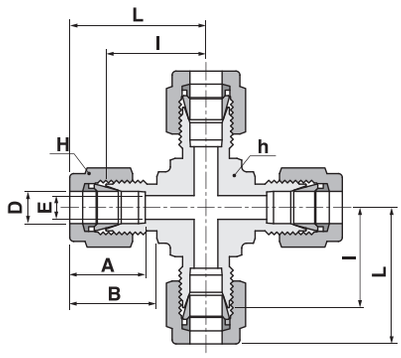

Connects fractional tube

Part No.	Tube O.D D		E	Width across flat h		Width across flat H		A	B	I	L
	in	mm	Min.	in	mm	in	mm				
SX-1	1/16	1.59	1.27	3/8	9.52	5/16	7.93	8.63	10.92	14.00	17.88
SX-2	1/8	3.17	2.28	3/8	9.52	7/16	11.11	12.70	15.24	15.74	22.35
SX-3	3/16	4.76	3.04	1/2	12.70	1/2	12.70	13.71	16.00	17.78	24.35
SX-4	1/4	6.35	4.82	1/2	12.70	9/16	14.28	15.24	17.78	19.55	26.92
SX-5	5/16	7.93	6.35	9/16	14.28	5/8	15.87	16.25	18.54	21.33	28.70
SX-6	3/8	9.52	7.11	5/8	15.87	11/16	17.46	16.76	19.30	23.11	30.48
SX-8	1/2	12.70	10.41	13/16	20.64	7/8	22.22	22.86	21.84	25.90	36.06
SX-10	5/8	15.87	12.70	15/16	23.81	1	25.40	24.38	21.84	28.70	38.80
SX-12	3/4	19.05	15.74	1-1/16	26.98	1-1/8	28.58	24.38	21.84	29.71	39.87
SX-14	7/8	22.22	18.28	1-1/4	31.75	1-1/4	31.75	25.90	21.84	34.54	44.70
SX-16	1	25.40	22.35	1-3/8	34.92	1-1/2	38.10	31.24	26.41	36.83	49.02
SX-20	1-1/4	31.75	27.68	1-11/16	42.86	1-7/8	47.63	41.14	38.86	44.50	66.54
SX-24	1-1/2	38.10	34.03	2	50.80	2-1/4	57.15	50.03	45.21	50.80	77.97
SX-32	2	50.80	45.97	2-3/4	69.85	3	76.20	67.56	62.73	69.80	107.18

Connects metric tube

Part No.	Tube O.D D	E Min.	Width across flat h	Width across flat H	A	B	I	L
SX-2M	2	1.7	9.5	12	12.9	15.3	15.7	22.3
SX-3M	3	2.4	9.5	12	12.9	15.3	15.7	22.3
SX-4M	4	2.4	12.7	12	13.7	16.1	18.8	25.4
SX-6M	6	4.8	12.7	14	15.3	17.7	19.6	27.0
SX-8M	8	6.4	14.3	16	16.2	18.6	21.3	28.8
SX-10M	10	7.9	17.5	19	17.2	19.5	23.9	31.5
SX-12M	12	9.5	20.6	22	22.8	22.0	25.9	36.0
SX-15M	15	11.9	27.0	25	24.4	22.0	28.7	38.8
SX-16M	16	12.7	27.0	25	24.4	22.0	28.7	38.8
SX-18M	18	15.1	27.0	30	24.4	22.0	29.7	39.8
SX-20M	20	15.9	31.8	32	26.0	22.0	34.5	42.6
SX-22M	22	18.3	31.8	32	26.0	22.0	34.5	42.6
SX-25M	25	21.8	34.9	38	31.3	26.5	36.8	49.1
SX-28M	28	21.8	41.0	46	36.6	36.6	43.2	64.0
SX-32M	32	28.6	46.0	50	42.0	41.6	49.3	72.3
SX-38M	38	33.7	55.0	60	49.4	47.9	56.4	84.0

Reducing Union Tee

STR

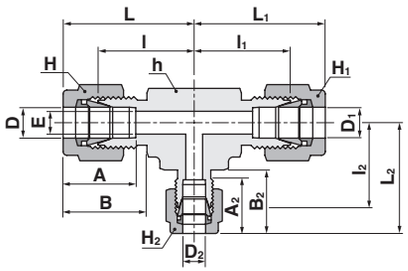

Connects fractional tube

Part No.	Tube O.D D in	Tube O.D D mm	Tube O.D D_1 in	Tube O.D D_1 mm	Tube O.D D_2 in	Tube O.D D_2 mm	E Min.	A	A_1	A_2	B	B_1	B_2	Width across flat h in	Width across flat h mm	Width across flat H in	Width across flat H mm	Width across flat H_1 in	Width across flat H_1 mm	Width across flat H_2 in	Width across flat H_2 mm	l	l_1	l_2	L	L_1	L_2
STR-4-2	1/4	6.35	1/4	6.35	1/8	3.17	2.28	15.24	15.24	12.70	17.78	17.78	15.24	1/2	12.70	9/16	14.28	9/16	14.28	7/16	11.11	19.55	19.55	17.90	26.91	26.91	24.50
STR-4-6	1/4	6.35	1/4	6.35	3/8	9.52	4.82	15.24	15.24	16.76	17.78	17.78	19.30	5/8	15.87	9/16	14.28	9/16	14.28	11/16	17.46	21.92	21.92	23.10	29.28	29.28	30.46
STR-4-8-8	1/4	6.35	1/2	12.70	1/2	12.70	4.82	15.24	22.86	22.86	17.78	21.84	21.84	13/16	20.64	9/16	14.28	7/8	22.22	7/8	22.22	24.40	25.90	25.90	31.76	36.06	36.06
STR-6-4-6	3/8	9.52	1/4	6.35	3/8	9.52	4.82	16.76	15.24	16.76	19.30	17.78	19.30	5/8	15.87	11/16	17.46	9/16	14.28	11/16	17.46	23.10	21.92	23.10	30.46	29.28	30.46
STR-6-4	3/8	9.52	3/8	9.52	1/4	6.35	4.82	16.76	16.76	15.24	19.30	19.30	17.78	5/8	15.87	11/16	17.46	11/16	17.46	9/16	14.28	23.10	23.10	21.92	30.46	30.46	29.28
STR-6-8	3/8	9.52	3/8	9.52	1/2	12.70	7.11	16.76	16.76	22.86	19.30	19.30	21.84	13/16	20.64	11/16	17.46	11/16	17.46	7/8	22.22	25.90	25.90	25.90	33.26	33.26	36.06
STR-8-4-6	1/2	12.70	1/4	6.35	3/8	9.52	4.82	22.86	15.24	16.76	21.84	17.78	19.30	13/16	20.64	7/8	22.22	9/16	14.28	11/16	17.46	25.90	25.90	25.90	36.06	33.26	33.26
STR-8-4-8	1/2	12.70	1/4	6.35	1/2	12.70	4.82	22.86	15.24	22.86	21.84	17.78	21.84	13/16	20.64	7/8	22.22	9/16	14.28	7/8	22.22	25.90	24.40	25.90	36.06	31.76	36.06
STR-8-6-6	1/2	12.70	3/8	9.52	3/8	9.52	7.11	22.86	16.76	16.76	21.84	19.30	19.30	13/16	20.64	7/8	22.22	11/16	17.46	11/16	17.46	25.90	25.90	25.90	36.06	33.26	33.26
STR-8-4	1/2	12.70	1/2	12.70	1/4	6.35	4.82	22.86	22.86	15.24	21.84	21.84	17.78	13/16	20.64	7/8	22.22	7/8	22.22	9/16	14.28	25.90	25.90	24.40	36.06	36.06	31.76
STR-8-6	1/2	12.70	1/2	12.70	3/8	9.52	7.11	22.86	22.86	16.76	21.84	21.84	19.30	13/16	20.64	7/8	22.22	7/8	22.22	11/16	17.46	25.90	25.90	25.90	36.06	36.06	33.26
STR-10-6	5/8	15.87	5/8	15.87	3/8	9.52	7.11	24.38	24.38	16.76	21.84	21.84	19.30	15/16	23.81	1	25.40	1	25.40	11/16	17.46	28.70	28.70	28.70	38.86	38.86	36.06
STR-12-8-12	3/4	19.05	1/2	12.70	3/4	19.05	10.41	24.38	22.86	24.38	21.84	21.84	21.84	1-1/16	26.98	1-1/8	28.58	7/8	22.22	1-1/8	28.58	29.71	29.71	29.71	39.87	39.87	39.87
STR-12-4	3/4	19.05	3/4	19.05	1/4	6.35	4.82	24.38	24.38	15.24	21.84	21.84	17.78	1-1/16	26.98	1-1/8	28.58	1-1/8	28.58	9/16	14.28	29.71	29.71	28.21	39.87	39.87	35.57
STR-12-6	3/4	19.05	3/4	19.05	3/8	9.52	7.11	24.38	24.38	16.76	21.84	21.84	19.30	1-1/16	26.98	1-1/8	28.58	1-1/8	28.58	11/16	17.46	29.71	29.71	29.71	39.87	39.87	35.57
STR-12-8	3/4	19.05	3/4	19.05	1/2	12.70	10.41	24.38	24.38	22.86	21.84	21.84	21.84	1-1/16	26.98	1-1/8	28.58	1-1/8	28.58	7/8	22.22	29.71	29.71	29.71	39.87	39.87	38.37
STR-12-16	3/4	19.05	3/4	19.05	1	25.40	15.74	24.38	24.38	31.24	21.84	21.84	26.41	1-3/8	34.92	1-1/8	28.58	1-1/8	28.58	1-1/2	38.10	34.43	34.43	36.83	49.02	49.02	45.70
STR-12-20	3/4	19.05	3/4	19.05	1-1/4	31.75	15.74	24.38	24.38	41.14	21.84	21.84	38.86	1-11/16	42.86	1-1/8	28.58	1-1/8	28.58	1-7/8	47.63	39.41	39.41	44.45	49.57	49.57	66.55
STR-14-8	7/8	22.22	7/8	22.22	1/2	12.70	10.41	25.90	25.90	22.86	21.84	21.84	21.84	1-1/4	31.75	1-1/4	31.75	1-1/4	31.75	7/8	22.22	34.54	34.54	34.54	44.70	44.70	44.70
STR-16-12-12	1	25.40	3/4	19.05	3/4	19.05	15.74	31.24	24.38	24.38	26.41	21.84	21.84	1-3/8	34.92	1-1/2	38.10	1-1/8	28.58	1-1/8	28.58	36.83	35.54	35.54	49.02	45.70	45.70
STR-16-4	1	25.40	1	25.40	1/4	6.35	4.82	31.24	31.24	15.24	26.41	26.41	17.78	1-3/8	34.92	1-1/2	38.10	1-1/2	38.10	9/16	14.28	36.83	36.83	33.04	49.02	49.02	40.40
STR-16-6	1	25.40	1	25.40	3/8	9.52	7.11	31.24	31.24	16.76	26.41	26.41	19.30	1-3/8	34.92	1-1/2	38.10	1-1/2	38.10	11/16	17.46	36.83	36.83	34.54	49.02	49.02	41.90
STR-16-8	1	25.40	1	25.40	1/2	12.70	10.41	31.24	31.24	22.86	26.41	26.41	21.84	1-3/8	34.92	1-1/2	38.10	1-1/2	38.10	7/8	22.22	36.83	36.83	34.54	49.02	49.02	44.70
STR-16-12	1	25.40	1	25.40	3/4	19.05	15.74	31.24	31.24	24.38	26.41	26.41	21.84	1-3/8	34.92	1-1/2	38.10	1-1/2	38.10	1-1/8	28.58	36.83	36.83	35.54	49.02	49.02	45.70
STR-20-12-12	1-1/4	31.75	3/4	19.05	3/4	19.05	15.74	41.14	24.38	24.38	38.86	21.84	21.84	1-11/16	42.86	1-7/8	47.63	1-1/8	28.58	1-1/8	28.58	44.45	39.41	39.41	66.55	49.57	49.57
STR-20-12	1-1/4	31.75	1-1/4	31.75	3/4	19.05	15.74	41.14	41.14	24.38	38.86	38.86	21.84	1-11/16	42.86	1-7/8	47.63	1-7/8	47.63	1-1/8	28.58	44.45	44.45	39.41	66.55	66.55	49.57
STR-24-20-20	1-1/2	38.10	1-1/4	31.75	1-1/4	31.75	27.68	50.03	41.14	41.14	45.21	38.86	38.86	2	50.80	2-1/4	57.15	1-7/8	47.63	1-7/8	47.63	50.80	49.62	49.62	77.97	71.72	71.72
STR-24-8	1-1/2	38.10	1-1/2	38.10	1/2	12.70	10.41	50.03	50.03	22.86	45.21	45.21	21.84	2	50.80	2-1/4	57.15	2-1/4	57.15	7/8	22.22	50.80	50.80	44.58	77.97	77.97	54.74
STR-24-12	1-1/2	38.10	1-1/2	38.10	3/4	19.05	15.74	50.03	50.03	24.38	45.21	45.21	21.84	2	50.80	2-1/4	57.15	2-1/4	57.15	1-1/8	28.58	50.80	50.80	44.58	77.97	77.97	54.74
STR-24-16	1-1/2	38.10	1-1/2	38.10	1	25.40	22.35	50.03	50.03	31.24	45.21	45.21	26.41	2	50.80	2-1/4	57.15	2-1/4	57.15	1-1/2	38.10	50.80	50.80	47.75	77.97	77.97	59.94

Reducing Union Tee

STR

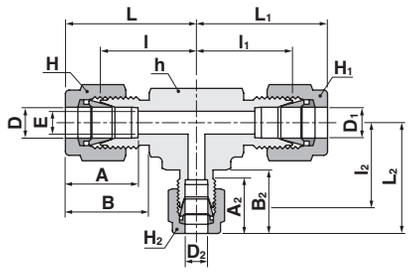

Connects metric tube

Part No.	Tube O.D			E	A	A_1	A_2	B	B_1	B_2	Width across flat				l	l_1	l_2	L	L_1	L_2
	D	D_1	D_2	Min.							h	H	H_1	H_2						
STR-3M-6M	3	3	6	2.4	12.9	12.9	15.3	15.3	15.3	17.7	12.7	12	12	14	18.0	18.0	19.6	24.6	24.6	27.0
STR-8M-6M	8	8	6	4.8	16.2	16.2	15.3	18.6	18.6	17.7	15.0	16	16	14	21.3	21.3	20.5	28.8	28.8	28.0
STR-10M-6M	10	10	6	4.8	17.2	17.2	15.3	19.5	19.5	17.7	17.4	19	19	14	23.9	23.9	22.4	31.5	31.5	29.8
STR-10M-12M	10	10	12	7.9	17.2	17.2	22.8	19.5	19.5	22.0	20.6	19	19	22	25.9	25.9	25.9	33.5	33.5	36.0
STR-12M-6M-10M	12	6	10	4.8	22.8	15.3	17.2	22.0	17.7	19.5	20.6	22	14	19	25.9	24.4	25.9	36.0	31.8	33.5
STR-12M-6M-12M	12	6	12	4.8	22.8	15.3	22.8	22.0	17.7	22.0	20.6	22	14	22	25.9	24.4	25.9	36.0	31.8	36.0
STR-12M-10M-10M	12	10	10	7.9	22.8	17.2	17.2	22.0	19.5	19.5	20.6	22	19	19	25.9	25.9	25.9	36.0	33.5	33.5
STR-12M-10M	12	12	10	7.9	22.8	22.8	17.2	22.0	22.0	19.5	20.6	22	22	19	25.9	25.9	25.9	36.0	36.0	33.5
STR-12M-6M	12	12	6	4.8	22.8	22.8	15.3	22.0	22.0	17.7	20.6	22	22	14	25.9	25.9	24.4	36.0	36.0	31.8
STR-15M-12M	15	15	12	9.8	24.4	24.4	22.8	28.7	28.7	22.0	23.8	25	25	22	28.7	28.7	28.7	38.8	38.8	38.8
STR-16M-12M	16	16	12	9.8	24.4	24.4	22.8	28.7	28.7	22.0	23.8	25	25	22	28.7	28.7	28.7	38.8	38.8	38.8
STR-18M-12M	18	18	12	9.8	24.4	24.4	22.8	29.7	29.7	22.0	27.0	30	30	22	29.7	29.7	29.5	39.8	39.8	39.6
STR-20M-12M-20M	20	12	20	9.8	26.0	22.8	26.0	34.5	22.0	34.5	34.9	32	22	32	32.5	32.5	32.5	42.6	42.6	42.6
STR-20M-6M	20	20	6	4.8	26.0	26.0	15.3	34.5	34.5	17.7	34.9	32	32	14	32.5	32.5	31.0	42.6	42.6	38.4
STR-20M-10M	20	20	10	7.9	26.0	26.0	17.2	34.5	34.5	19.5	34.9	32	32	19	32.5	32.5	32.5	42.6	42.6	40.1
STR-20M-12M	20	20	12	9.8	26.0	26.0	22.8	34.5	34.5	22.0	34.9	32	32	22	32.5	32.5	32.5	42.6	42.6	42.6
STR-20M-25M	20	20	25	15.9	26.0	26.0	31.3	34.5	34.5	26.5	34.9	32	32	38	34.3	34.3	36.8	44.4	44.4	49.1
STR-20M-32M	20	20	32	15.9	26.0	26.0	42.0	34.5	34.5	41.6	46.0	32	32	50	42.5	42.5	49.3	52.6	52.6	72.3
STR-22M-12M	22	22	12	9.8	26.0	26.0	22.8	34.5	34.5	22.0	31.8	32	32	22	32.5	32.5	32.5	42.6	42.6	42.6
STR-25M-20M-20M	25	20	20	15.9	31.3	26.0	26.0	26.5	34.5	34.5	34.9	38	32	32	36.8	34.3	34.3	49.1	44.4	44.4
STR-25M-10M	25	25	10	7.9	31.3	31.3	17.2	26.5	26.5	19.5	34.9	38	38	19	36.8	36.8	34.3	49.1	49.1	38.9
STR-25M-12M	25	25	12	9.8	31.3	31.3	22.8	26.5	26.5	22.0	34.9	38	38	22	36.8	36.8	34.3	49.1	49.1	44.4
STR-25M-20M	25	25	20	15.9	31.3	31.3	26.0	26.5	26.5	34.5	34.9	38	38	32	36.8	36.8	34.3	49.1	49.1	44.4
STR-32M-20M	32	32	20	15.9	42.0	42.0	26.0	41.6	41.6	34.5	46.0	38	38	32	49.3	49.3	42.5	72.3	72.3	52.6
STR-38M-32M-32M	38	32	32	28.6	49.4	42.0	42.0	47.9	41.6	41.6	50.8	60	38	38	56.4	54.7	54.7	84.0	77.7	77.7
STR-38M-20M	38	38	20	15.9	49.4	49.4	26.0	47.9	47.9	34.5	50.8	60	60	32	56.4	56.4	47.9	84.0	84.0	58.0
STR-38M-25M	38	38	25	21.8	49.4	49.4	31.3	47.9	47.9	26.5	50.8	60	60	38	56.4	56.4	50.4	84.0	84.0	62.7

Bulkhead Union

SUB

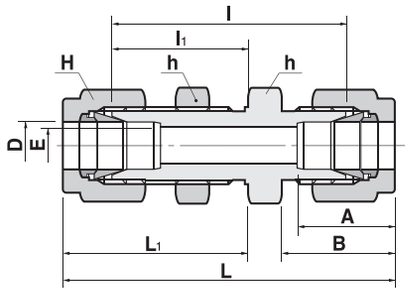

Connects fractional tube

Part No.	Tube O.D D		E	Width across flat h		H		A	B	I	I_1	L	L_1	Panel Hole Drill Size	Panel Max. Thickness
	in	mm	Min.	in	mm	in	mm								
SUB-1	1/16	1.59	1.27	5/16	7.93	5/16	7.93	8.63	10.92	23.87	13.46	31.50	17.27	5.16	3.05
SUB-2	1/8	3.17	2.28	1/2	12.70	7/16	11.11	12.70	15.24	38.10	24.63	51.30	31.24	8.33	12.70
SUB-3	3/16	4.76	3.04	9/16	14.28	1/2	12.70	13.71	16.00	40.38	25.40	53.59	32.00	9.92	12.70
SUB-4	1/4	6.35	4.82	5/8	15.87	9/16	14.28	15.24	17.78	42.92	26.16	57.65	33.52	11.50	10.16
SUB-5	5/16	7.93	6.35	11/16	17.46	5/8	15.87	16.25	18.54	45.97	28.44	60.70	35.81	13.09	11.17
SUB-6	3/8	9.52	7.11	3/4	19.05	11/16	17.46	16.76	19.30	47.49	29.46	62.23	36.83	14.68	11.17
SUB-8	1/2	12.70	10.41	15/16	23.81	7/8	22.22	22.86	21.84	50.80	31.75	71.10	41.91	19.44	12.70
SUB-10	5/8	15.87	12.70	1-1/16	26.98	1	25.40	24.38	21.84	52.32	32.51	72.64	42.67	22.62	12.70
SUB-12	3/4	19.05	15.74	1-3/16	30.16	1-1/8	28.58	24.38	21.84	58.67	37.33	78.99	47.49	25.79	16.76
SUB-14	7/8	22.22	18.28	1-3/8	34.92	1-1/4	31.75	25.90	21.84	64.26	42.92	84.58	53.08	28.97	19.05
SUB-16	1	25.40	22.35	1-5/8	41.27	1-1/2	38.10	31.24	26.41	71.37	45.21	95.75	57.40	33.73	19.05
SUB-20	1-1/4	31.75	27.68	1-7/8	47.63	1-7/8	47.63	41.14	38.86	78.99	47.75	123.19	69.85	41.67	19.05
SUB-24	1-1/2	38.10	34.03	2-1/4	57.15	2-1/4	57.15	50.03	45.21	84.83	49.27	139.19	76.45	49.61	19.05
SUB-32	2	50.80	45.97	2-3/4	69.85	3	76.20	67.56	62.73	105.66	56.38	180.34	93.72	57.94	19.05

Connects metric tube

Part No.	Tube O.D D	E Min.	Width across flat h	H	A	B	I	I_1	L	L_1	Panel Hole Drill Size	Panel Max. Thickness
SUB-3M	3	2.4	14	12	12.9	15.3	38.1	24.6	51.3	31.2	8.3	12.7
SUB-4M	4	2.4	14	12	13.7	16.1	40.4	25.4	53.6	32.0	9.9	12.7
SUB-6M	6	4.8	16	14	15.3	17.7	42.9	26.2	57.7	33.6	11.5	10.2
SUB-8M	8	6.4	18	16	16.2	18.6	46.0	28.6	61.0	36.1	13.1	11.2
SUB-10M	10	7.9	22	19	17.2	19.5	48.5	29.4	63.7	37.0	16.2	11.2
SUB-12M	12	9.5	24	22	22.8	22.0	50.8	31.8	71.0	41.9	19.5	12.7
SUB-15M	15	11.9	27	25	24.4	22.0	52.3	32.5	72.5	42.6	22.8	12.7
SUB-16M	16	12.7	27	25	24.4	22.0	52.3	32.5	72.5	42.6	22.8	12.7
SUB-18M	18	15.1	30	30	24.4	22.0	58.7	37.3	78.9	47.4	26.0	16.8
SUB-20M	20	15.9	35	32	26.0	22.0	64.3	42.9	84.5	53.0	29.0	17.0
SUB-22M	22	18.3	35	32	26.0	22.0	64.3	42.9	84.5	53.0	29.0	19.1
SUB-25M	25	21.8	41	38	31.3	26.5	71.4	45.2	95.9	57.5	33.7	19.1
SUB-32M	32	28.6	50	50	42.0	41.6	82.3	49.5	128.3	72.5	42.5	19.0
SUB-38M	38	33.7	60	60	49.4	47.9	89.4	51.5	144.6	79.1	50.5	19.0

45° Union Elbow

SLBU

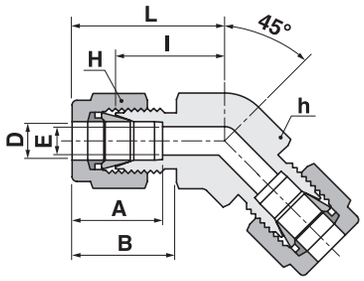

Connects fractional tube

Part No.	Tube O.D D		E	Width across flat h		Width across flat H		A	B	I	L
	in	mm	Min.	in	mm	in	mm				
SLBU-4	1/4	6.35	4.82	1/2	12.7	9/16	14.28	15.24	17.78	17.27	24.63
SLBU-6	3/8	9.52	7.11	5/8	15.87	11/16	17.46	16.76	19.30	20.60	27.94
SLBU-8	1/2	12.7	10.41	13/16	20.64	7/8	22.22	22.86	22.00	21.80	32.00
SLBU-12	3/4	19.05	15.74	1-1/16	26.98	1-1/8	28.58	24.20	21.70	21.80	31.70
SLBU-16	1	25.4	22.35	1-3/8	34.92	1-1/2	38.10	31.24	26.41	28.20	40.40
*SLBU-20	1-1/4	31.75	27.68	1-11/16	42.86	1-7/8	47.63	41.00	38.88	44.50	66.50
*SLBU-24	1-1/2	38.1	34.03	2	50.8	2-1/4	57.15	50.38	45.40	50.00	77.40
*SLBU-32	2	50.8	45.97	2-3/4	69.85	3	76.20	67.56	62.73	69.80	107.18

*Approval Drawing Required

Connects metric tube

Part No.	Tube O.D D	E Min.	Width across flat h	Width across flat H	A	B	I	L
SLBU-4M	4	2.4	12.7	12	13.7	16.0	18.0	24.5
SLBU-6M	6	4.8	12.7	14	15.3	17.6	19.0	26.3
SLBU-12M	12	9.5	20.6	22	22.9	22.0	20.6	30.8
SLBU-15M	15	11.9	27	25	24.3	22.0	22.8	32.8
SLBU-18M	18	15.1	27	30	24.4	22.0	24.4	34.5
SLBU-20M	20	15.9	34.9	32	26.0	22.0	26.2	36.1
SLBU-25M	25	21.8	34.9	38	31.3	26.5	28.2	40.5
SLBU-38M	38	33.7	55	60	49.4	47.9	50.0	77.6

Male Connector

SMC-N

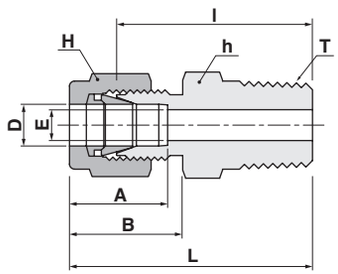

Connects fractional tube to female NPT thread

These fittings may have a larger opening at the pipe / staight thread end.

Part No.	Tube O.D D		T	E	Width across flat h		H		A	B	I	L
	in	mm	N(NPT)	Min.	in	mm	in	mm				
SMC-1-1N	1/16	1.59	1/16	1.27	5/16	7.93	5/16	7.93	8.63	10.92	20.00	23.83
SMC-1-2N	1/16	1.59	1/8	1.27	7/16	11.11	5/16	7.93	8.63	10.92	22.35	26.23
SMC-1-4N	1/16	1.59	1/4	1.27	9/16	14.28	5/16	7.93	8.63	10.92	27.17	30.98
SMC-2-1N	1/8	3.17	1/16	2.28	7/16	11.11	7/16	11.11	12.70	15.24	23.11	29.71
SMC-2-2N	1/8	3.17	1/8	2.28	7/16	11.11	7/16	11.11	12.70	15.24	23.87	30.48
SMC-2-4N	1/8	3.17	1/4	2.28	9/16	14.28	7/16	11.11	12.70	15.24	28.95	35.56
SMC-2-6N	1/8	3.17	3/8	2.28	11/16	17.46	7/16	11.11	12.70	15.24	29.21	35.38
SMC-2-8N	1/8	3.17	1/2	2.28	7/8	22.22	7/16	11.11	12.70	15.24	35.56	42.16
SMC-3-2N	3/16	4.76	1/8	3.04	7/16	11.11	1/2	12.70	13.71	16.00	24.63	31.24
SMC-3-4N	3/16	4.76	1/4	3.04	9/16	14.28	1/2	12.70	13.71	16.00	29.71	36.32
SMC-4-1N	1/4	6.35	1/16	4.82	1/2	12.70	9/16	14.28	15.24	17.78	25.40	32.76
SMC-4-2N	1/4	6.35	1/8	4.82	1/2	12.70	9/16	14.28	15.24	17.78	25.40	32.76
SMC-4-4N	1/4	6.35	1/4	4.82	9/16	14.28	9/16	14.28	15.24	17.78	30.48	37.84
SMC-4-6N	1/4	6.35	3/8	4.82	11/16	17.46	9/16	14.28	15.24	17.78	30.98	38.35
SMC-4-8N	1/4	6.35	1/2	4.82	7/8	22.22	9/16	14.28	15.24	17.78	37.33	44.70
SMC-4-12N	1/4	6.35	3/4	4.82	1-1/6	26.98	9/16	14.28	15.24	17.78	38.86	46.22
SMC-5-2N	5/16	7.93	1/8	6.35	9/16	14.28	5/8	15.87	16.25	18.54	26.67	34.03
SMC-5-4N	5/16	7.93	1/4	6.35	9/16	14.28	5/8	15.87	16.25	18.54	31.24	38.60
SMC-5-6N	5/16	7.93	3/8	6.35	11/16	17.46	5/8	15.87	16.25	18.54	31.75	39.11
SMC-5-8N	5/16	7.93	1/2	6.35	7/8	22.22	5/8	15.87	16.25	18.54	38.11	45.60
SMC-6-2N	3/8	9.52	1/8	7.11	5/8	15.87	11/16	17.46	16.76	19.30	27.94	35.30
SMC-6-4N	3/8	9.52	1/4	7.11	5/8	15.87	11/16	17.46	16.76	19.30	32.51	39.87
SMC-6-6N	3/8	9.52	3/8	7.11	11/16	17.46	11/16	17.46	16.76	19.30	32.51	39.87
SMC-6-8N	3/8	9.52	1/2	7.11	7/8	22.22	11/16	17.46	16.76	19.30	38.86	46.22
SMC-6-12N	3/8	9.52	3/4	7.11	1-1/16	26.98	11/16	17.46	16.76	19.30	40.38	47.75
SMC-8-2N	1/2	12.70	1/8	10.41	13/16	20.64	7/8	22.22	22.86	21.84	28.70	38.86
SMC-8-4N	1/2	12.70	1/4	10.41	13/16	20.64	7/8	22.22	22.86	21.84	33.27	43.43
SMC-8-6N	1/2	12.70	3/8	10.41	13/16	20.64	7/8	22.22	22.86	21.84	33.27	43.43
SMC-8-8N	1/2	12.70	1/2	10.41	7/8	22.22	7/8	22.22	22.86	21.84	38.86	49.02
SMC-8-12N	1/2	12.70	3/4	10.41	1-1/16	26.98	7/8	22.22	22.86	21.84	40.38	50.54
SMC-8-16N	1/2	12.70	1	10.41	1-3/8	34.92	7/8	22.22	22.86	21.84	46.99	57.15
SMC-10-6N	5/8	15.87	3/8	12.70	15/16	23.81	1	25.40	24.38	21.84	34.03	44.19
SMC-10-8N	5/8	15.87	1/2	12.70	15/16	23.81	1	25.40	24.38	21.84	38.86	49.02
SMC-10-12N	5/8	15.87	3/4	12.70	1-1/16	26.98	1	25.40	24.38	21.84	40.38	50.54
SMC-12-8N	3/4	19.05	1/2	15.74	1-1/16	26.98	1-1/8	28.58	24.38	21.84	40.38	50.54
SMC-12-12N	3/4	19.05	3/4	15.74	1-1/16	26.98	1-1/8	28.58	24.38	21.84	40.38	50.54
SMC-12-16N	3/4	19.05	1	15.74	1-3/8	34.92	1-1/8	28.58	24.38	21.84	46.99	57.15
SMC-14-12N	7/8	22.22	3/4	18.28	1-3/16	30.16	1-1/4	31.75	25.90	21.84	40.38	50.54
SMC-14-16N	7/8	22.22	1	18.28	1-3/8	34.92	1-1/4	31.75	25.90	21.84	46.99	57.15
SMC-16-8N	1	25.40	1/2	22.35	1-3/8	34.92	1-1/2	38.10	31.24	26.41	45.21	57.40
SMC-16-12N	1	25.40	3/4	22.35	1-3/8	34.92	1-1/2	38.10	31.24	26.41	45.21	57.40
SMC-16-16N	1	25.40	1	22.35	1-3/8	34.92	1-1/2	38.10	31.24	26.41	50.03	62.23
SMC-20-16N	1-1/4	31.75	1	27.68	1-3/4	44.45	1-7/8	47.63	41.14	38.86	55.11	77.21
SMC-20-20N	1-1/4	31.75	1-1/4	27.68	1-3/4	44.45	1-7/8	47.63	41.14	38.86	55.11	77.21
SMC-20-24N	1-1/4	31.75	1-1/2	27.68	1-3/4	44.45	1-7/8	47.63	41.14	38.86	60.54	82.64
SMC-24-20N	1-1/2	38.10	1-1/4	34.03	2-1/8	53.98	2-1/4	57.15	50.03	45.21	59.42	86.60
SMC-24-24N	1-1/2	38.10	1-1/2	34.03	2-1/8	53.98	2-1/4	57.15	50.03	45.21	61.72	88.90
SMC-24-32N	1-1/2	38.10	2	34.03	2-3/4	69.85	2-1/4	57.15	50.03	45.21	62.42	99.75
SMC-32-8N	2	50.80	1/2	45.97	2-3/4	69.85	3	76.20	67.56	62.73	68.40	105.73
SMC-32-20N	2	50.80	1-1/4	45.97	2-3/4	69.85	3	76.20	67.56	62.73	71.40	108.73
SMC-32-24N	2	50.80	1-1/2	45.97	2-3/4	69.85	3	76.20	67.56	62.73	75.50	112.83
SMC-32-32N	2	50.80	2	45.97	2-3/4	69.85	3	76.20	67.56	62.73	76.20	113.53

Male Connector

SMC-R

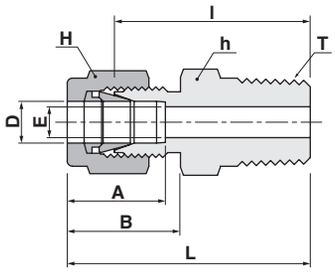

Connects metric tube to female ISO taper thread

These fittings may have a larger opening at the pipe / staight thread end.

Part No.	Tube O.D	T	E	Width across flat		A	B	I	L
	D	R(PT)	Min.	h	H				
SMC-2M-2R	2	1/8	1.7	12	12	12.9	15.3	23.1	29.7
SMC-3M-2R	3	1/8	2.4	12	12	12.9	15.3	23.1	29.7
SMC-3M-4R	3	1/4	2.4	14	12	12.9	15.3	29.0	35.6
SMC-4M-2R	4	1/8	2.4	12	12	13.7	16.1	24.6	31.2
SMC-4M-4R	4	1/4	2.4	14	12	13.7	16.1	29.7	36.3
SMC-6M-2R	6	1/8	4.8	14	14	15.3	17.7	25.4	32.8
SMC-6M-4R	6	1/4	4.8	14	14	15.3	17.7	30.2	37.6
SMC-6M-6R	6	3/8	4.8	8	14	15.3	17.7	31.0	38.4
SMC-6M-8R	6	1/2	4.8	22	14	15.3	17.7	36.6	44.0
SMC-8M-2R	8	1/8	6.4	15	16	16.2	18.6	26.7	34.2
SMC-8M-4R	8	1/4	6.4	15	16	16.2	18.6	31.2	38.7
SMC-8M-6R	8	3/8	6.4	18	16	16.2	18.6	31.8	39.2
SMC-8M-8R	8	1/2	6.4	22	16	16.2	18.6	37.3	44.8
SMC-10M-2R	10	1/8	4.8	18	19	17.2	19.5	28.7	36.3
SMC-10M-4R	10	1/4	7.1	18	19	17.2	19.5	33.3	40.9
SMC-10M-6R	10	3/8	7.9	18	19	17.2	19.5	33.3	40.9
SMC-10M-8R	10	1/2	7.9	22	19	17.2	19.5	38.1	45.7
SMC-12M-4R	12	1/4	9.5	22	22	22.8	22.0	33.3	43.4
SMC-12M-6R	12	3/8	9.5	22	22	22.8	22.0	33.3	43.4
SMC-12M-8R	12	1/2	9.5	22	22	22.8	22.0	38.1	48.2
SMC-12M-12R	12	3/4	9.5	27	22	22.8	22.0	38.9	49.0
SMC-15M-8R	15	1/2	11.9	24	25	24.4	22.0	38.9	49.0
SMC-16M-4R	16	1/4	12.7	24	25	24.4	22.0	34.0	44.1
SMC-16M-6R	16	3/8	12.7	24	25	24.4	22.0	34.0	44.1
SMC-16M-8R	16	1/2	12.7	24	25	24.4	22.0	38.9	49.0
SMC-16M-12R	16	3/4	12.7	27	25	24.4	22.0	38.9	49.0
SMC-18M-8R	18	1/2	15.1	27	30	24.4	22.0	40.4	50.5
SMC-18M-12R	18	3/4	15.1	27	30	24.4	22.0	40.4	50.5
SMC-20M-8R	20	1/2	15.9	30	32	26.0	22.0	42.2	52.3
SMC-20M-12R	20	3/4	15.9	30	32	26.0	22.0	42.2	52.3
SMC-22M-12R	22	3/4	18.3	30	32	26.0	22.0	42.2	52.3
SMC-22M-16R	22	1	18.3	35	32	26.0	22.0	47.8	57.9
SMC-25M-12R	25	3/4	21.8	35	38	31.3	26.5	45.2	57.5
SMC-25M-16R	25	1	21.8	35	38	31.3	26.5	50.0	62.3
SMC-28M-16R	28	1	21.8	41	46	36.6	36.6	51.6	72.4
SMC-28M-20R	28	1-1/4	21.8	46	46	36.6	36.6	52.3	73.1
SMC-32M-20R	32	1-1/4	28.6	46	50	42.0	41.6	56.6	79.6
SMC-38M-24R	38	1-1/2	33.7	55	60	49.4	47.9	64.0	91.6

Male Connector
for Bonded Seal

SMC-G

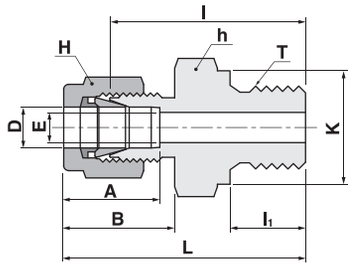

Connects fractional tube to female ISO parallel thread
These fittings may have a larger opening at the pipe / staight thread end.

Part No.	Tube O.D D		T	E	Width across flat h		H		A	B	I	l_1	L	K
	in	mm	G(PF)	Min.	in	mm	in	mm						
SMC-2-2G	1/8	3.17	1/8	2.28	9/16	14.28	7/16	11.11	12.70	15.24	23.37	7.11	29.97	13.72
SMC-2-4G	1/8	3.17	1/4	2.28	3/4	19.05	7/16	11.11	12.70	15.24	28.70	11.18	35.31	18.03
SMC-2-6G	1/8	3.17	3/8	2.28	7/8	22.22	7/16	11.11	12.70	15.24	29.72	11.18	36.21	21.84
SMC-4-2G	1/4	6.35	1/8	4.82	9/16	14.28	9/16	14.28	15.24	17.78	24.89	7.11	32.26	13.72
SMC-4-4G	1/4	6.35	1/4	4.82	3/4	19.05	9/16	14.28	15.24	17.78	30.23	11.18	37.59	18.03
SMC-4-6G	1/4	6.35	3/8	4.82	7/8	22.22	9/16	14.28	15.24	17.78	61.50	11.18	38.86	21.84
SMC-4-8G	1/4	6.35	1/2	4.82	1-1/16	26.98	9/16	14.28	15.24	17.78	37.34	14.22	44.70	25.91
SMC-6-4G	3/8	9.52	1/4	7.11	3/4	19.05	11/16	17.46	16.76	19.30	31.75	11.18	39.12	18.03
SMC-6-6G	3/8	9.52	3/8	7.11	7/8	22.22	11/16	17.46	16.76	19.30	33.02	11.18	40.39	21.84
SMC-6-8G	3/8	9.52	1/2	7.11	1-1/16	26.98	11/16	17.46	16.76	19.30	38.86	14.22	46.23	25.91
SMC-8-4G	1/2	12.70	1/4	10.41	13/16	20.64	7/8	22.22	22.86	21.84	32.51	11.18	42.67	18.03
SMC-8-6G	1/2	12.70	3/8	10.41	7/8	22.22	7/8	22.22	22.86	21.84	33.02	11.18	43.18	21.84
SMC-8-8G	1/2	12.70	1/2	10.41	1-1/16	26.98	7/8	22.22	22.86	21.84	38.86	14.22	49.02	25.91
SMC-12-8G	3/4	19.05	1/2	15.74	1-1/16	26.98	1-1/8	28.58	24.38	21.84	38.86	14.22	49.02	25.91
SMC-12-12G	3/4	19.05	3/4	15.74	1-5/16	33.33	1-1/8	28.58	24.38	21.84	42.67	15.75	52.83	32.00
SMC-16-8G	1	25.40	1/2	22.35	1-3/8	34.92	1-1/2	38.10	31.24	26.41	43.69	14.22	55.88	25.91
SMC-16-16G	1	25.40	1	22.35	1-5/8	41.27	1-1/2	38.10	31.24	26.41	47.75	18.29	59.94	39.12
SMC-20-20G	1-1/4	31.75	1-1/4	27.68	2	50.80	1-7/8	47.63	41.14	38.86	51.16	20.00	73.26	49.00
SMC-24-24G	1-1/2	38.10	1-1/2	34.03	2-1/4	57.15	2-1/4	57.15	50.03	45.21	57.57	22.00	84.75	55.00

Connects metric tube to female ISO parallel thread

Part No.	Tube O.D D	T G(PF)	E Min.	Width across flat h	H	A	B	I	l_1	L	K
SMC-2M-2G	2	1/8	1.7	14	12	12.9	15.3	23.4	7.1	30.0	13.8
SMC-3M-2G	3	1/8	2.4	14	12	12.9	15.3	23.4	7.1	30.0	13.8
SMC-3M-4G	3	1/4	2.4	19	12	12.9	15.3	28.7	11.2	35.3	18.0
SMC-4M-2G	4	1/8	2.4	14	12	13.7	16.1	24.1	7.1	30.7	13.8
SMC-4M-4G	4	1/4	2.4	19	12	13.7	16.1	29.4	11.2	36.0	18.0
SMC-6M-2G	6	1/8	4.8	14	14	15.3	17.7	24.9	7.1	32.3	13.8
SMC-6M-4G	6	1/4	4.8	19	14	15.3	17.7	30.2	11.2	37.6	18.0
SMC-6M-6G	6	3/8	4.8	22	14	15.3	17.7	31.5	11.2	38.9	21.8
SMC-6M-8G	6	1/2	4.8	27	14	15.3	17.7	37.3	14.2	44.7	26.0
SMC-8M-2G	8	1/8	6.4	15	16	16.2	18.6	25.7	7.1	33.2	13.8
SMC-8M-4G	8	1/4	6.4	19	16	16.2	18.6	31.0	11.2	38.5	18.0
SMC-8M-6G	8	3/8	6.4	22	16	16.2	18.6	32.3	11.2	39.8	21.8
SMC-8M-8G	8	1/2	6.4	27	16	16.2	18.6	38.1	14.2	45.6	26.0
SMC-10M-4G	10	1/4	7.9	19	19	17.2	19.5	31.8	11.2	39.4	18.0
SMC-10M-6G	10	3/8	7.9	22	19	17.2	19.5	33.0	11.2	40.6	21.8
SMC-10M-8G	10	1/2	7.9	27	19	17.2	19.5	38.9	14.2	46.5	26.0
SMC-12M-4G	12	1/4	9.5	22	22	22.8	22.0	32.5	11.2	42.6	18.0
SMC-12M-6G	12	3/8	9.5	22	22	22.8	22.0	33.0	11.2	43.1	21.8
SMC-12M-8G	12	1/2	9.5	27	22	22.8	22.0	38.9	14.2	49.0	26.0
SMC-12M-12G	12	3/4	9.5	35	22	22.8	22.0	42.7	15.7	52.8	32.0
SMC-16M-6G	16	3/8	12.7	24	25	24.4	22.0	33.8	11.2	43.9	21.8
SMC-16M-8G	16	1/2	12.7	27	25	24.4	22.0	38.9	14.2	49.0	26.0
SMC-18M-8G	18	1/2	15.1	27	30	24.4	22.0	38.9	14.2	49.0	26.0
SMC-18M-12G	18	3/4	15.1	35	30	24.4	22.0	42.7	15.7	52.8	32.0
SMC-20M-8G	20	1/2	15.9	30	32	26.0	22.0	40.4	14.2	50.5	26.0
SMC-20M-12G	20	3/4	15.9	35	32	26.0	22.0	42.7	15.7	52.8	32.0
SMC-22M-12G	22	3/4	18.3	35	32	26.0	22.0	42.7	15.7	52.8	32.0
SMC-22M-16G	22	1	18.3	41	32	26.0	22.0	45.2	18.3	55.3	39.0
SMC-25M-12G	25	3/4	21.8	35	38	31.3	26.5	45.2	15.7	57.5	32.0
SMC-25M-16G	25	1	21.8	41	38	31.3	26.5	47.8	18.3	60.1	39.0
SMC-28M-16G	28	1	21.8	41	46	36.6	36.6	49.3	18.3	70.1	39.0
SMC-28M-20G	28	1-1/4	21.8	50	46	36.6	36.6	53.1	19.8	73.9	49.0
SMC-32M-20G	32	1-1/4	28.6	50	50	42.0	41.6	55.9	19.8	78.9	49.0
SMC-38M-24G	38	1-1/2	33.7	55	60	49.4	47.9	63.2	22.1	90.8	54.7

Thermocouple Connector

SMCT

S-LOK thermocouple connector has no shoulder nor sizing angle inside the fitting; the features enable thermocoupler to go through the fitting's thread end.

Example : SMCT 8-8N-S6 for ordering Thermocouple connector
O.D 1/2"× 1/2"NPT S316

Assembly Instructions
1. Position the length of the Thermocouple passed through fitting's thread end and hold it to prevent shifting during assembly.
2. Turn the nut 1-1/4 after finger tight with a wrench by holding the body with a back up wrench for size 1/4"(6mm) or above.

ISO Pipe Thread

The International Standards Organization created the ISO 228/1 and 7/1 threads to standardize the nomenclature of several international pipe threads.

ISO 7/1

The ISO 7/1 is a tapered thread that is sealing threads working by interference fit. This still requires thread sealant for pressure-tight seal by filling the voids between threads, and further, this prevents galling on piping threads. The sealant usually contains a lubricant.
The ISO 7/1 is described in following codes.
1. BS 21(BSPT) 2. JIS B0203(PT) 3. ISO 7/1 4. DIN 2999 (male thread only)

The ISO 7/1 looks similar to the NPT thread. See how different they are as illustrated below.

ISO 7/1 tapered pipe thread

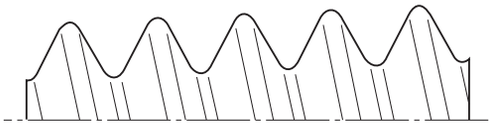

*55°thread angle
*Pitch measured in millimeters
*Truncation of root and crest are round
*Taper angle 1°47'

NPT tapered pipe threads

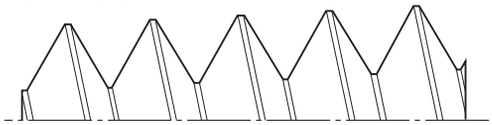

*60°thread angle
*Pitch measured in Inches
*Truncation of root and crest are flat
*Taper angle 1°47'

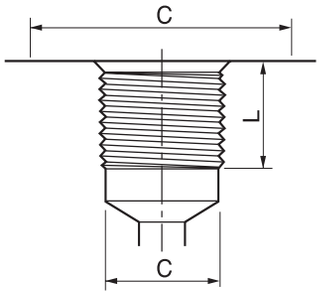

ISO Internal Parallel Pipe Thread

S-LOK Pipe Thread Designator	ISO Female Parallel Pipe Size	Minimum Full Thread Depth L	Thread Minor Diameter D	Minmum Flat Diameter for SGB & SGC C
2	1/8	0.31	0.337 / 0.348	0.59
4	1/4	0.47	0.450 / 0.468	0.75
6	3/8	0.47	0.588 / 0.606	0.91
8	1/2	0.55	0.733 / 0.755	1.06
12	3/4	0.63	0.949 / 0.971	1.30
16	1	0.71	1.193 / 1.218	1.57

ISO 228/1

ISO 228/1 is parallel thread the that is no sealing threads. The pressure tight seal is usually made metal to metal against the female port or with a gasket.

ISO 228/1 is described in following codes.
1.BS 2779(BSPP) 2.DIN-ISO 228/1 3.JIS B0202(PF) 4.ISO 228/1

The ISO 228/1 threads sealing available in S-LOK are listed below.

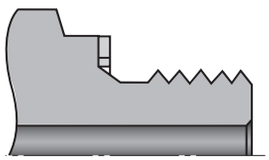

Sealing by compression against face of body
Reference DIN 3852 Type A

A self-centering taper is constructed at the hex. This taper centers a bonded washer to seal to the surface surrounding the female thread.

SGB Bonded Seal Gasket
(Buna inner ring bonded to carbon steel outer ring)

Ordering Number	E		H		D	
	in	mm	in	mm	in	mm
SGB-2-	0.41	10.4	0.08	2.0	0.63	16.0
SGB-4-	0.54	13.7	0.08	2.0	0.81	20.6
SGB-6-	0.68	17.3	0.08	2.0	0.94	23.9
SGB-8-	0.85	21.6	0.10	2.5	1.13	28.7
SGB-12-	1.06	27.2	0.10	2.5	1.38	35.1
SGB-16-	1.33	33.8	0.10	3.2	1.69	42.9
SGB-20-	1.67	42.4	0.10	3.2	2.01	51.1
SGB-24-	1.92	48.8	0.10	3.2	2.33	59.2

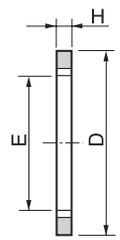

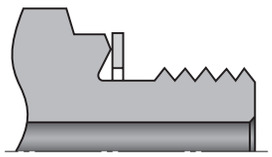

Sealing by gasket (washer)
Reference DIN 3852 Type B

A metal gasket performs the sealing between the reverse bevel of the fitting and the face of the female threaded component.

SGC Copper Gasket

Ordering Number	E		H		D	
	in	mm	in	mm	in	mm
SGC-2-	0.39	9.9	0.04	1.0	0.59	15.0
SGC-4-	0.52	13.2	0.06	1.5	0.75	19.1
SGC-6-	0.66	16.8	0.06	1.5	0.91	23.1
SGC-8-	0.83	21.1	0.06	1.5	1.06	26.9
SGC-12-	1.05	26.7	0.08	2.0	1.30	33.0
SGC-16-	1.31	33.3	0.08	2.0	1.58	40.1
SGC-20-	1.66	42.2	0.08	2.0	1.96	49.8
SGC-24-	1.89	48.0	0.08	2.0	2.30	58.4

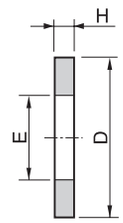

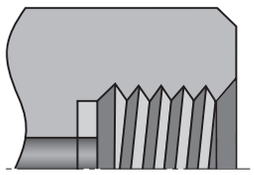

Sealing by gasket.
Reference DIN 3852 Type Y

A gasket is dropped into the flat bottom of the female thread. The face of the male thread eerts aload on the gasket to seal.

SGG Copper Gasket

Ordering Number	E		H		D	
	in	mm	in	mm	in	mm
SGG-4-	0.30	7.6	0.08	2.0	0.42	10.7
SGG-6-	0.34	8.6	0.10	2.5	0.56	14.2
SGG-8-	0.36	9.1	0.10	2.5	0.70	17.8

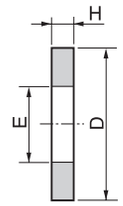

Male Connector
for Metal Gasket

SOM

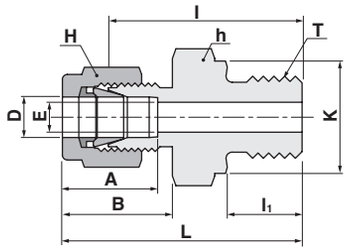

Connects fractional tube to female ISO parallel thread

These fittings may have a larger opening at the pipe / staight thread end.

Part No.	Tube O.D D		T	E	Width across flat h		H		A	B	I	I_1	L	K
	in	mm	G(PF)	Min.	in	mm	in	mm						
SOM-2-2G	1/8	3.17	1/8	2.28	9/16	14.28	7/16	11.11	12.70	15.24	23.37	7.11	29.97	13.72
SOM-2-4G	1/8	3.17	1/4	2.28	3/4	19.05	7/16	11.11	12.70	15.24	28.70	11.18	35.31	18.03
SOM-2-6G	1/8	3.17	3/8	2.28	7/8	22.22	7/16	11.11	12.70	15.24	29.72	11.18	36.21	21.84
SOM-4-2G	1/4	6.35	1/8	4.82	9/16	14.28	9/16	14.28	15.24	17.78	24.89	7.11	32.26	13.72
SOM-4-4G	1/4	6.35	1/4	4.82	3/4	19.05	9/16	14.28	15.24	17.78	30.23	11.18	37.59	18.03
SOM-4-6G	1/4	6.35	3/8	4.82	7/8	22.22	9/16	14.28	15.24	17.78	61.50	11.18	38.86	21.84
SOM-4-8G	1/4	6.35	1/2	4.82	1-1/16	26.98	9/16	14.28	15.24	17.78	37.34	14.22	44.70	25.91
SOM-6-4G	3/8	9.52	1/4	7.11	3/4	19.05	11/16	17.46	16.76	19.30	31.75	11.18	39.12	18.03
SOM-6-6G	3/8	9.52	3/8	7.11	7/8	22.22	11/16	17.46	16.76	19.30	33.02	11.18	40.39	21.84
SOM-6-8G	3/8	9.52	1/2	7.11	1-1/16	26.98	11/16	17.46	16.76	19.30	38.86	14.22	46.23	25.91
SOM-8-4G	1/2	12.70	1/4	10.41	13/16	20.64	7/8	22.22	22.86	21.84	32.51	11.18	42.67	18.03
SOM-8-6G	1/2	12.70	3/8	10.41	7/8	22.22	7/8	22.22	22.86	21.84	33.02	11.18	43.18	21.84
SOM-8-8G	1/2	12.70	1/2	10.41	1-1/16	26.98	7/8	22.22	22.86	21.84	38.86	14.22	49.02	25.91
SOM-12-8G	3/4	19.05	1/2	15.74	1-1/16	26.98	1-1/8	28.58	24.38	21.84	38.86	14.22	49.02	25.91
SOM-12-12G	3/4	19.05	3/4	15.74	1-5/16	33.33	1-1/8	28.58	24.38	21.84	42.67	15.75	52.83	32.00
SOM-16-8G	1	25.40	1/2	22.35	1-3/8	34.92	1-1/2	38.10	31.24	26.41	43.69	14.22	55.88	25.91
SOM-16-16G	1	25.40	1	22.35	1-5/8	41.27	1-1/2	38.10	31.24	26.41	47.75	18.29	59.94	39.12
SOM-20-20G	1-1/4	31.75	1-1/4	27.68	2	50.80	1-7/8	47.63	41.14	38.86	51.16	20.00	73.26	49.00
SOM-24-24G	1-1/2	38.10	1-1/2	34.03	2-1/4	57.15	2-1/4	57.15	50.03	45.21	57.57	22.00	84.75	55.00

Connects metric tube to female ISO parallel thread

Part No.	Tube O.D D	T G(PF)	E Min.	Width across flat h	H	A	B	I	I_1	L	K
SOM-3M-2G	3	1/8	2.4	14	12	12.9	15.3	23.4	7.1	30.0	13.8
SOM-3M-4G	3	1/4	2.4	19	12	12.9	15.3	28.7	11.2	35.3	18.0
SOM-4M-2G	4	1/8	2.4	14	12	13.7	16.1	24.1	7.1	30.7	13.8
SOM-6M-2G	6	1/8	4.8	14	14	15.3	17.7	24.9	7.1	32.3	13.8
SOM-6M-4G	6	1/4	4.8	19	14	15.3	17.7	30.2	11.2	37.6	18.0
SOM-6M-6G	6	3/8	4.8	22	14	15.3	17.7	31.5	11.2	38.9	21.8
SOM-6M-8G	6	1/2	4.8	27	14	15.3	17.7	37.3	14.2	44.7	26.0
SOM-8M-2G	8	1/8	6.4	15	16	16.2	18.6	25.7	7.1	33.2	13.8
SOM-8M-4G	8	1/4	6.4	19	16	16.2	18.6	31.0	11.2	38.5	18.0
SOM-8M-6G	8	3/8	6.4	22	16	16.2	18.6	32.3	11.2	39.8	21.8
SOM-8M-8G	8	1/2	6.4	27	16	16.2	18.6	38.1	14.2	45.6	26.0
SOM-10M-4G	10	1/4	7.9	19	19	17.2	19.5	31.8	11.2	39.4	18.0
SOM-10M-6G	10	3/8	7.9	22	19	17.2	19.5	33.0	11.2	40.6	21.8
SOM-10M-8G	10	1/2	7.9	27	19	17.2	19.5	38.9	14.2	46.5	26.0
SOM-12M-4G	12	1/4	9.5	22	22	22.8	22.0	32.5	11.2	42.6	18.0
SOM-12M-6G	12	3/8	9.5	22	22	22.8	22.0	33.0	11.2	43.1	21.8
SOM-12M-8G	12	1/2	9.5	27	22	22.8	22.0	38.9	14.2	49.0	26.0
SOM-12M-12G	12	3/4	9.5	35	22	22.8	22.0	42.7	15.7	52.8	32.0
SOM-16M-6G	16	3/8	12.7	24	25	24.4	22.0	33.8	11.2	43.9	21.8
SOM-16M-8G	16	1/2	12.7	27	25	24.4	22.0	38.9	14.2	49.0	26.0
SOM-18M-8G	18	1/2	15.1	27	30	24.4	22.0	38.9	14.2	49.0	26.0
SOM-18M-12G	18	3/4	15.1	35	30	24.4	22.0	42.7	15.7	52.8	32.0
SOM-20M-8G	20	1/2	15.9	30	32	26.0	22.0	40.4	14.2	50.5	26.0
SOM-20M-12G	20	3/4	15.9	35	32	26.0	22.0	42.7	15.7	52.8	32.0
SOM-22M-12G	22	3/4	18.3	35	32	26.0	22.0	42.7	15.7	52.8	32.0
SOM-22M-16G	22	1	18.3	41	32	26.0	22.0	45.2	18.3	55.3	39.0
SOM-25M-12G	25	3/4	21.8	35	38	31.3	26.5	45.2	15.7	57.5	32.0
SOM-25M-16G	25	1	21.8	41	38	31.3	26.5	47.8	18.3	60.1	39.0
SOM-28M-16G	28	1	21.8	41	46	36.6	36.6	49.3	18.3	70.1	39.0
SOM-28M-20G	28	1-1/4	21.8	50	46	36.6	36.6	53.1	19.8	73.9	49.0
SOM-32M-20G	32	1-1/4	28.6	50	50	42.0	41.6	55.9	19.8	78.9	49.0
SOM-38M-24G	38	1-1/2	33.7	55	60	49.4	47.9	61.7	20.6	89.3	54.7

Bulkhead
Male Connector

SMCB

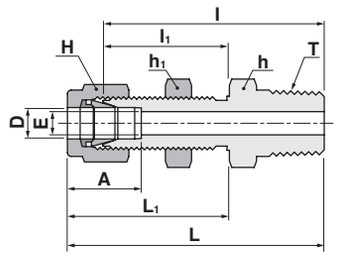

Connects fractional tube to female NPT thread
These fittings may have a larger opening at the pipe / staight thread end.

Part No.	Tube O.D D		T	E	Width across flat h		h_1		H		A	I	I_1	L	L_1	Panel Hole Drill Size	Panel Max. Thickness
	in	mm	N(NPT)	Min.	in	mm	in	mm	in	mm							
SMCB-2-2N	1/8	3.17	1/8	2.28	1/2	12.70	1/2	12.70	7/16	11.11	12.70	39.87	24.63	46.48	31.24	8.33	12.70
SMCB-4-2N	1/4	6.35	1/8	4.82	5/8	15.87	5/8	15.87	9/16	14.28	15.24	42.16	26.16	49.53	33.52	11.50	10.16
SMCB-4-4N	1/4	6.35	1/4	4.82	5/8	15.87	5/8	15.87	9/16	14.28	15.24	45.97	26.16	53.34	33.52	11.50	10.16
SMCB-6-4N	3/8	9.52	1/4	7.11	3/4	19.05	3/4	19.05	11/16	17.46	16.76	50.03	29.46	57.40	36.83	14.68	11.17
SMCB-6-6N	3/8	9.52	3/8	7.11	3/4	19.05	3/4	19.05	11/16	17.46	16.76	50.03	29.46	57.40	36.83	14.68	11.17
SMCB-6-8N	3/8	9.52	1/2	7.11	7/8	22.22	7/8	22.22	11/16	17.46	16.76	56.38	29.46	63.75	36.83	14.68	11.17
SMCB-8-6N	1/2	12.70	3/8	10.41	15/16	23.81	15/16	23.81	7/8	22.22	22.86	53.08	31.75	63.24	41.91	19.44	12.70
SMCB-8-8N	1/2	12.70	1/2	10.41	15/16	23.81	15/16	23.81	7/8	22.22	22.86	58.67	31.75	68.83	41.91	19.44	12.70
SMCB-12-12N	3/4	19.05	3/4	15.74	1-3/16	30.16	1-3/16	30.16	1-1/8	28.58	24.38	66.04	37.33	76.20	47.49	25.76	16.76
SMCB-16-16N	1	25.40	1	22.35	1-5/8	41.28	1-5/8	41.28	1-1/2	38.10	31.24	81.02	45.21	93.21	57.40	33.73	19.05
SMCB-20-20N	1-1/4	31.75	1-1/4	27.68	1-7/8	47.63	1-7/8	47.63	1-7/8	47.63	41.14	85.97	47.75	108.07	69.85	41.67	19.05
SMCB-24-24N	1-1/2	38.10	1-1/2	34.03	2-1/4	57.15	2-1/4	57.15	2-1/4	57.15	50.03	93.03	49.27	120.21	76.45	49.61	19.05
SMCB-32-32N	2	50.80	2	45.97	2-3/4	69.85	2-3/4	69.85	3	76.20	67.56	107.29	56.38	144.62	93.71	57.94	19.05

45° Male Elbow

SLBM

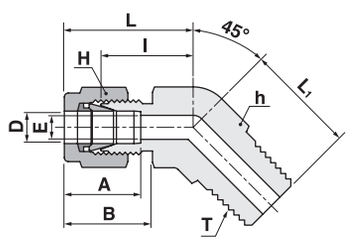

Connects fractional tube to female NPT thread
These fittings may have a larger opening at the pipe / staight thread end.

Part No.	Tube O.D D		T	E	Width across flat h		H		A	B	I	L	L_1
	in	mm	N(NPT)	Min.	in	mm	in	mm					
SLBM-4-2N	1/4	6.35	1/8	4.82	1/2	12.70	9/16	14.28	15.24	17.78	17.27	24.63	16.51
SLBM-4-4N	1/4	6.35	1/4	4.82	1/2	12.70	9/16	14.28	15.24	17.78	17.27	24.63	21.08
SLBM-6-2N	3/8	9.52	1/8	4.82	5/8	15.87	11/16	17.46	16.76	19.30	20.57	27.94	18.28
SLBM-6-4N	3/8	9.52	1/4	7.11	5/8	15.87	11/16	17.46	16.76	19.30	20.57	27.94	22.86
SLBM-6-6N	3/8	9.52	3/8	7.11	11/16	17.46	11/16	17.46	16.76	19.30	21.84	29.21	24.13
SLBM-8-6N	1/2	12.70	3/8	10.41	13/16	20.64	7/8	22.22	22.86	21.84	21.84	32.00	24.13
SLBM-8-8N	1/2	12.70	1/2	10.41	13/16	20.64	7/8	22.22	22.86	21.84	21.84	32.00	28.95
SLBM-12-12N	3/4	19.05	3/4	15.74	1-1/16	26.98	1-1/8	28.58	24.38	21.84	23.87	34.03	30.98
SLBM-16-16N	1	25.40	1	22.35	1-3/8	34.92	1-1/2	38.10	31.24	26.41	28.19	40.38	37.84

Male Elbow

SLM

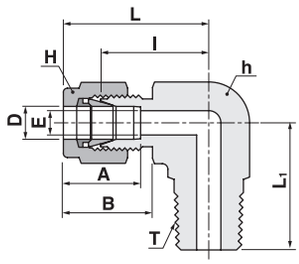

Connects fractional tube to female NPT thread

These fittings may have a larger opening at the pipe / staight thread end.

Part No.	Tube O.D D		T	E	Width across flat h		H		A	B	l	L	L_1
	in	mm	N(NPT)	Min.	in	mm	in	mm					
SLM-1-1N	1/16	1.59	1/16	1.27	7/16	11.11	5/16	7.93	8.63	10.92	15.24	19.05	17.78
SLM-1-2N	1/16	1.59	1/8	1.27	7/16	11.11	5/16	7.93	8.63	10.92	15.24	19.05	17.78
SLM-2-2N	1/8	3.17	1/8	2.28	1/2	12.70	7/16	11.11	12.70	15.24	18.30	24.91	18.90
SLM-2-4N	1/8	3.17	1/4	2.28	1/2	12.70	7/16	11.11	12.70	15.24	18.30	24.91	23.36
SLM-3-2N	3/16	4.76	1/8	3.04	1/2	12.70	1/2	12.70	13.71	16.00	18.79	25.40	18.79
SLM-3-4N	3/16	4.76	1/4	3.04	1/2	12.70	1/2	12.70	13.71	16.00	18.79	25.40	23.36
SLM-4-1N	1/4	6.35	1/16	4.82	1/2	12.70	9/16	14.28	15.24	17.78	19.55	26.90	18.79
SLM-4-2N	1/4	6.35	1/8	4.82	1/2	12.70	9/16	14.28	15.24	17.78	19.10	26.47	19.10
SLM-4-4N	1/4	6.35	1/4	4.82	1/2	12.70	9/16	14.28	15.24	17.78	19.81	27.18	23.87
SLM-4-6N	1/4	6.35	3/8	4.82	11/16	17.46	9/16	14.28	15.24	17.78	22.35	29.71	26.20
SLM-4-8N	1/4	6.35	1/2	4.82	13/16	20.64	9/16	14.28	15.24	17.78	24.60	31.97	33.02
SLM-5-2N	5/16	7.93	1/8	6.35	9/16	14.28	5/8	15.87	16.25	18.54	21.33	28.70	19.81
SLM-5-4N	5/16	7.93	1/4	6.35	9/16	14.28	5/8	15.87	16.25	18.54	21.33	29.77	24.50
SLM-5-6N	5/16	7.93	3/8	6.35	11/16	17.46	5/8	15.87	16.25	18.54	23.11	30.48	26.20
SLM-6-2N	3/8	9.52	1/8	7.11	5/8	15.87	11/16	17.46	16.76	19.30	23.11	30.48	20.60
SLM-6-4N	3/8	9.52	1/4	7.11	5/8	15.87	11/16	17.46	16.76	19.30	23.11	30.48	25.40
SLM-6-6N	3/8	9.52	3/8	7.11	11/16	17.46	11/16	17.46	16.76	19.30	23.87	31.24	26.20
SLM-6-8N	3/8	9.52	1/2	7.11	13/16	20.64	11/16	17.46	16.76	19.30	25.90	31.42	33.02
SLM-6-12N	3/8	9.52	3/4	7.11	1-1/16	26.98	11/16	17.46	16.76	19.30	29.71	37.08	36.83
SLM-8-4N	1/2	12.70	1/4	10.41	13/16	20.64	7/8	22.22	22.86	21.84	25.90	36.06	28.30
SLM-8-6N	1/2	12.70	3/8	10.41	13/16	20.64	7/8	22.22	22.86	21.84	25.90	36.06	28.30
SLM-8-8N	1/2	12.70	1/2	10.41	13/16	20.64	7/8	22.22	22.86	21.84	25.90	36.06	33.02
SLM-8-12N	1/2	12.70	3/4	10.41	1-1/16	26.98	7/8	22.22	22.86	21.84	29.71	39.87	36.83
SLM-10-6N	5/8	15.87	3/8	12.70	15/16	23.81	1	25.40	24.38	21.84	28.00	37.06	30.22
SLM-10-8N	5/8	15.87	1/2	12.70	15/16	23.81	1	25.40	24.38	21.84	28.00	37.06	35.10
SLM-10-12N	5/8	15.87	3/4	12.70	1-1/16	26.98	1	25.40	24.38	21.84	29.71	39.87	36.83
SLM-12-8N	3/4	19.05	1/2	15.74	1-1/16	26.98	1-1/8	28.58	24.38	21.84	29.71	39.87	37.00
SLM-12-12N	3/4	19.05	3/4	15.74	1-1/16	26.98	1-1/8	28.58	24.38	21.84	29.71	39.87	36.83
SLM-14-12N	7/8	22.22	3/4	18.28	1-1/4	31.75	1-1/4	31.75	25.90	21.84	34.54	44.70	41.65
SLM-16-12N	1	25.40	3/4	22.35	1-3/8	34.92	1-1/2	38.10	31.24	26.41	36.83	49.02	42.20
SLM-16-16N	1	25.40	1	22.35	1-3/8	34.92	1-1/2	38.10	31.24	26.41	36.83	49.02	49.70
SLM-20-20N	1-1/4	31.75	1-1/4	27.68	1-11/16	42.86	1-7/8	47.63	41.14	38.86	44.50	66.54	49.75
SLM-24-24N	1-1/2	38.10	1-1/2	34.03	2	50.80	2-1/4	57.15	50.03	45.21	50.80	77.97	60.45
SLM-32-32N	2	50.80	2	45.97	2-3/4	69.82	3	76.20	67.56	62.54	69.80	107.18	70.61

Male Elbow

SLM

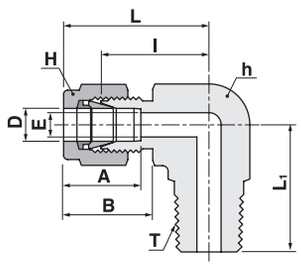

Connects metric tube to female ISO taper thread

Part No.	Tube O.D	T	E	Width across flat		A	B	l	L	L_1
	D	R(PT)	Min.	h	H					
SLM-3M-2R	3	1/8	2.4	12.7	12	12.9	15.3	17.0	23.6	17.8
SLM-3M-4R	3	1/4	2.4	12.7	12	12.9	15.3	18.0	24.6	23.4
SLM-4M-2R	4	1/8	2.4	12.7	12	13.7	16.1	18.8	25.4	18.8
SLM-4M-4R	4	1/4	2.4	12.7	12	13.7	16.1	18.8	25.4	23.4
SLM-6M-2R	6	1/8	4.8	12.7	14	15.3	17.7	19.6	27.0	18.8
SLM-6M-4R	6	1/4	4.8	12.7	14	15.3	17.7	19.6	27.0	23.4
SLM-6M-6R	6	3/8	4.8	17.5	14	15.3	17.7	22.4	29.8	26.2
SLM-6M-8R	6	1/2	4.8	20.6	14	15.3	17.7	24.4	31.8	33.0
SLM-8M-2R	8	1/8	6.4	14.3	16	16.2	18.6	21.3	28.8	19.8
SLM-8M-4R	8	1/4	6.4	14.3	16	16.2	18.6	21.3	28.8	24.4
SLM-8M-6R	8	3/8	6.4	17.5	16	16.2	18.6	23.1	30.6	26.2
SLM-8M-8R	8	1/2	6.4	20.6	16	16.2	18.6	25.1	32.6	33.0
SLM-10M-2R	10	1/8	7.9	17.5	19	17.2	19.5	23.9	31.5	23.6
SLM-10M-4R	10	1/4	7.9	17.5	19	17.2	19.5	23.9	31.5	26.2
SLM-10M-6R	10	3/8	7.9	17.5	19	17.2	19.5	23.9	31.5	26.2
SLM-10M-8R	10	1/2	7.9	20.6	19	17.2	19.5	25.9	33.5	33.0
SLM-12M-2R	12	1/4	9.5	20.6	22	22.8	22.0	25.9	36.0	23.6
SLM-12M-4R	12	1/4	9.5	20.6	22	22.8	22.0	25.9	36.0	28.2
SLM-12M-6R	12	3/8	9.5	20.6	22	22.8	22.0	25.9	36.0	28.2
SLM-12M-8R	12	1/2	9.5	20.6	22	22.8	22.0	25.9	36.0	33.0
SLM-12M-12R	12	3/4	9.5	27.0	22	22.8	22.0	29.7	39.8	36.8
SLM-16M-6R	16	3/8	12.7	23.8	25	24.4	22.0	27.9	38.0	30.2
SLM-16M-8R	16	1/2	12.7	23.8	25	24.4	22.0	27.9	38.0	35.1
SLM-16M-12R	16	3/4	12.7	27.0	25	24.4	22.0	29.7	39.8	36.8
SLM-18M-8R	18	1/2	15.1	27.0	30	24.4	22.0	29.7	39.8	36.8
SLM-18M-12R	18	3/4	15.1	27.0	30	24.4	22.0	29.7	39.8	36.8
SLM-20M-8R	20	1/2	15.9	31.8	32	26.0	22.0	34.5	44.6	41.7
SLM-20M-12R	20	3/4	15.9	31.8	32	26.0	22.0	34.5	44.6	41.7
SLM-22M-12R	22	3/4	18.3	31.8	32	26.0	22.0	34.5	44.6	41.7
SLM-22M-16R	22	1	18.3	34.9	32	26.0	22.0	34.5	44.6	46.5
SLM-25M-12R	25	3/4	21.8	34.9	38	31.3	26.5	36.8	49.1	41.7
SLM-25M-16R	25	1	21.8	34.9	38	31.3	26.5	36.8	49.1	46.5

Male Run Tee

STRM

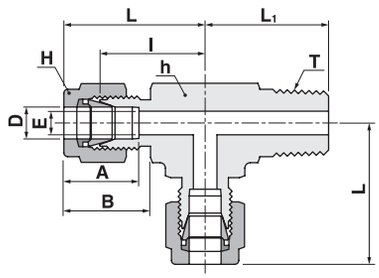

Connects fractional tube to female NPT thread

These fittings may have a larger opening at the pipe / staight thread end.

Part No.	Tube O.D D		T	E	Width across flat h		H		A	B	I	L	L_1
	in	mm	N(NPT)	Min.	in	mm	in	mm					
STRM-1-1N	1/16	1.59	1/16	1.27	7/16	11.11	5/16	7.93	8.63	10.92	15.24	19.05	17.78
STRM-1-2N	1/16	1.59	1/8	1.27	7/16	11.11	5/16	7.93	8.63	10.92	15.24	19.05	17.78
STRM-2-2N	1/8	3.17	1/8	2.28	1/2	12.70	7/16	11.11	12.70	15.24	18.30	24.91	18.90
STRM-2-4N	1/8	3.17	1/4	2.28	1/2	12.70	7/16	11.11	12.70	15.24	18.30	24.91	23.36
STRM-3-2N	3/16	4.76	1/8	3.04	1/2	12.70	1/2	12.70	13.71	16.00	18.79	25.40	18.79
STRM-3-4N	3/16	4.76	1/4	3.04	1/2	12.70	1/2	12.70	13.71	16.00	18.79	25.40	23.36
STRM-4-1N	1/4	6.35	1/16	4.82	1/2	12.70	9/16	14.28	15.24	17.78	19.55	26.90	18.79
STRM-4-2N	1/4	6.35	1/8	4.82	1/2	12.70	9/16	14.28	15.24	17.78	19.10	26.47	19.10
STRM-4-4N	1/4	6.35	1/4	4.82	1/2	12.70	9/16	14.28	15.24	17.78	19.81	27.18	23.87
STRM-4-6N	1/4	6.35	3/8	4.82	11/16	17.46	9/16	14.28	15.24	17.78	22.35	29.71	26.20
STRM-4-8N	1/4	6.35	1/2	4.82	13/16	20.64	9/16	14.28	15.24	17.78	24.60	31.97	33.02
STRM-5-2N	5/16	7.93	1/8	6.35	9/16	14.28	5/8	15.87	16.25	18.54	21.33	28.70	19.81
STRM-5-4N	5/16	7.93	1/4	6.35	9/16	14.28	5/8	15.87	16.25	18.54	21.33	29.77	24.50
STRM-5-6N	5/16	7.93	3/8	6.35	11/16	17.46	5/8	15.87	16.25	18.54	23.11	30.48	26.20
STRM-6-4N	3/8	9.52	1/4	7.11	5/8	15.87	11/16	17.46	16.76	19.30	23.11	30.48	25.40
STRM-6-6N	3/8	9.52	3/8	7.11	11/16	17.46	11/16	17.46	16.76	19.30	23.87	31.24	26.20
STRM-6-8N	3/8	9.52	1/2	7.11	13/16	20.64	11/16	17.46	16.76	19.30	25.90	31.42	33.02
STRM-6-12N	3/8	9.52	3/4	7.11	1-1/16	26.98	11/16	17.46	16.76	19.30	29.71	37.08	36.83
STRM-8-4N	1/2	12.70	1/4	10.41	13/16	20.64	7/8	22.22	22.86	21.84	25.90	36.06	28.30
STRM-8-6N	1/2	12.70	3/8	10.41	13/16	20.64	7/8	22.22	22.86	21.84	25.90	36.06	28.30
STRM-8-8N	1/2	12.70	1/2	10.41	13/16	20.64	7/8	22.22	22.86	21.84	25.90	36.06	33.02
STRM-8-12N	1/2	12.70	3/4	10.41	1-1/16	26.98	7/8	22.22	22.86	21.84	29.71	39.87	36.83
STRM-10-6N	5/8	15.87	3/8	12.70	15/16	23.81	1	25.40	24.38	21.84	28.00	37.06	30.22
STRM-10-8N	5/8	15.87	1/2	12.70	15/16	23.81	1	25.40	24.38	21.84	28.00	37.06	35.10
STRM-10-12N	5/8	15.87	3/4	12.70	1-1/16	26.98	1	25.40	24.38	21.84	29.71	39.87	36.83
STRM-12-8N	3/4	19.05	1/2	15.74	1-1/16	26.98	1-1/8	28.58	24.38	21.84	29.71	39.87	37.00
STRM-12-12N	3/4	19.05	3/4	15.74	1-1/16	26.98	1-1/8	28.58	24.38	21.84	29.71	39.87	36.83
STRM-14-12N	7/8	22.22	3/4	18.28	1-1/4	31.75	1-1/4	31.75	25.90	21.84	34.54	44.70	41.65
STRM-16-12N	1	25.40	3/4	22.35	1-3/8	34.92	1-1/2	38.10	31.24	26.41	36.83	49.02	42.20
STRM-16-16N	1	25.40	1	22.35	1-3/8	34.92	1-1/2	38.10	31.24	26.41	36.83	49.02	49.70
STRM-20-20N	1-1/4	31.75	1-1/4	27.68	1-11/16	42.86	1-7/8	47.63	41.14	38.86	44.50	66.54	49.75
STRM-24-24N	1-1/2	38.10	1-1/2	34.03	2	50.80	2-1/4	57.15	50.03	45.21	50.80	77.97	60.45
STRM-32-32N	2	50.80	2	45.97	2-3/4	69.82	3	76.20	67.56	62.54	69.80	107.18	70.61

Male Run Tee

STRM

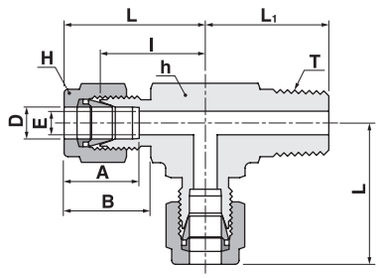

Connects metric tube to female ISO taper thread

Part No.	Tube O.D	T	E	Width across flat		A	B	I	L	L_1
	D	R(PT)	Min.	h	H					
STRM-3M-2R	3	1/8	2.4	12.7	12	12.9	15.3	17.0	23.6	17.8
STRM-3M-4R	3	1/4	2.4	12.7	12	12.9	15.3	18.0	24.6	23.4
STRM-4M-2R	4	1/8	2.4	12.7	12	13.7	16.1	18.8	25.4	18.8
STRM-4M-4R	4	1/4	2.4	12.7	12	13.7	16.1	18.8	25.4	23.4
STRM-6M-2R	6	1/8	4.8	12.7	14	15.3	17.7	19.6	27.0	18.8
STRM-6M-4R	6	1/4	4.8	12.7	14	15.3	17.7	19.6	27.0	23.4
STRM-6M-6R	6	3/8	4.8	17.5	14	15.3	17.7	22.4	29.8	26.2
STRM-6M-8R	6	1/2	4.8	20.6	14	15.3	17.7	24.4	31.8	33.0
STRM-8M-2R	8	1/8	6.4	14.3	16	16.2	18.6	21.3	28.8	19.8
STRM-8M-4R	8	1/4	6.4	14.3	16	16.2	18.6	21.3	28.8	24.4
STRM-8M-6R	8	3/8	6.4	17.5	16	16.2	18.6	23.1	30.6	26.2
STRM-8M-8R	8	1/2	6.4	20.6	16	16.2	18.6	25.1	32.6	33.0
STRM-10M-2R	10	1/8	7.9	17.5	19	17.2	19.5	23.9	31.5	23.6
STRM-10M-4R	10	1/4	7.9	17.5	19	17.2	19.5	23.9	31.5	26.2
STRM-10M-6R	10	3/8	7.9	17.5	19	17.2	19.5	23.9	31.5	26.2
STRM-10M-8R	10	1/2	7.9	20.6	19	17.2	19.5	25.9	33.5	33.0
STRM-12M-4R	12	1/4	9.5	20.6	22	22.8	22.0	25.9	36.0	28.2
STRM-12M-6R	12	3/8	9.5	20.6	22	22.8	22.0	25.9	36.0	28.2
STRM-12M-8R	12	1/2	9.5	20.6	22	22.8	22.0	25.9	36.0	33.0
STRM-12M-12R	12	3/4	9.5	27.0	22	22.8	22.0	29.7	39.8	36.8
STRM-16M-6R	16	3/8	12.7	23.8	25	24.4	22.0	27.9	38.0	30.2
STRM-16M-8R	16	1/2	12.7	23.8	25	24.4	22.0	27.9	38.0	35.1
STRM-16M-12R	16	3/4	12.7	27.0	25	24.4	22.0	29.7	39.8	36.8
STRM-18M-8R	18	1/2	15.1	27.0	30	24.4	22.0	29.7	39.8	36.8
STRM-18M-12R	18	3/4	15.1	27.0	30	24.4	22.0	29.7	39.8	36.8
STRM-20M-8R	20	1/2	15.9	31.8	32	26.0	22.0	34.5	44.6	41.7
STRM-20M-12R	20	3/4	15.9	31.8	32	26.0	22.0	34.5	44.6	41.7
STRM-22M-12R	22	3/4	18.3	31.8	32	26.0	22.0	34.5	44.6	41.7
STRM-22M-16R	22	1	18.3	34.9	32	26.0	22.0	34.5	44.6	46.5
STRM-25M-12R	25	3/4	21.8	34.9	38	31.3	26.5	36.8	49.1	41.7
STRM-25M-16R	25	1	21.8	34.9	38	31.3	26.5	36.8	49.1	46.5

Male Branch Tee

STBM

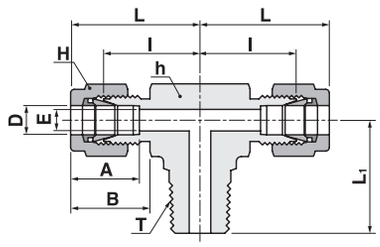

Connects fractional tube to female NPT thread

These fittings may have a larger opening at the pipe / staight thread end.

Part No.	Tube O.D D		T	E	Width across flat h		H		A	B	I	L	L_1
	in	mm	N(NPT)	Min.	in	mm	in	mm					
STBM-1-1N	1/16	1.59	1/16	1.27	7/16	11.11	5/16	7.93	8.63	10.92	15.24	19.05	17.78
STBM-1-2N	1/16	1.59	1/8	1.27	7/16	11.11	5/16	7.93	8.63	10.92	15.24	19.05	17.78
STBM-2-2N	1/8	3.17	1/8	2.28	1/2	12.70	7/16	11.11	12.70	15.24	18.30	24.91	18.90
STBM-2-4N	1/8	3.17	1/4	2.28	1/2	12.70	7/16	11.11	12.70	15.24	18.30	24.91	23.36
STBM-3-2N	3/16	4.76	1/8	3.04	1/2	12.70	1/2	12.70	13.71	16.00	18.79	25.40	18.79
STBM-3-4N	3/16	4.76	1/4	3.04	1/2	12.70	1/2	12.70	13.71	16.00	18.79	25.40	23.36
STBM-4-1N	1/4	6.35	1/16	4.82	1/2	12.70	9/16	14.28	15.24	17.78	19.55	26.90	18.79
STBM-4-2N	1/4	6.35	1/8	4.82	1/2	12.70	9/16	14.28	15.24	17.78	19.10	26.47	19.10
STBM-4-4N	1/4	6.35	1/4	4.82	1/2	12.70	9/16	14.28	15.24	17.78	19.81	27.18	23.87
STBM-4-6N	1/4	6.35	3/8	4.82	11/16	17.46	9/16	14.28	15.24	17.78	22.35	29.71	26.20
STBM-4-8N	1/4	6.35	1/2	4.82	13/16	20.64	9/16	14.28	15.24	17.78	24.60	31.97	33.02
STBM-5-2N	5/16	7.93	1/8	6.35	9/16	14.28	5/8	15.87	16.25	18.54	21.33	28.70	19.81
STBM-5-4N	5/16	7.93	1/4	6.35	9/16	14.28	5/8	15.87	16.25	18.54	21.33	29.77	24.50
STBM-5-6N	5/16	7.93	3/8	6.35	11/16	17.46	5/8	15.87	16.25	18.54	23.11	30.48	26.20
STBM-6-4N	3/8	9.52	1/4	7.11	5/8	15.87	11/16	17.46	16.76	19.30	23.11	30.48	25.40
STBM-6-6N	3/8	9.52	3/8	7.11	11/16	17.46	11/16	17.46	16.76	19.30	23.87	31.24	26.20
STBM-6-8N	3/8	9.52	1/2	7.11	13/16	20.64	11/16	17.46	16.76	19.30	25.90	31.42	33.02
STBM-6-12N	3/8	9.52	3/4	7.11	1-1/16	26.98	11/16	17.46	16.76	19.30	29.71	37.08	36.83
STBM-8-4N	1/2	12.70	1/4	10.41	13/16	20.64	7/8	22.22	22.86	21.84	25.90	36.06	28.30
STBM-8-6N	1/2	12.70	3/8	10.41	13/16	20.64	7/8	22.22	22.86	21.84	25.90	36.06	28.30
STBM-8-8N	1/2	12.70	1/2	10.41	13/16	20.64	7/8	22.22	22.86	21.84	25.90	36.06	33.02
STBM-8-12N	1/2	12.70	3/4	10.41	1-1/16	26.98	7/8	22.22	22.86	21.84	29.71	39.87	36.83
STBM-10-6N	5/8	15.87	3/8	12.70	15/16	23.81	1	25.40	24.38	21.84	28.00	37.06	30.22
STBM-10-8N	5/8	15.87	1/2	12.70	15/16	23.81	1	25.40	24.38	21.84	28.00	37.06	35.10
STBM-10-12N	5/8	15.87	3/4	12.70	1-1/16	26.98	1	25.40	24.38	21.84	29.71	39.87	36.83
STBM-12-8N	3/4	19.05	1/2	15.74	1-1/16	26.98	1-1/8	28.58	24.38	21.84	29.71	39.87	37.00
STBM-12-12N	3/4	19.05	3/4	15.74	1-1/16	26.98	1-1/8	28.58	24.38	21.84	29.71	39.87	36.83
STBM-14-12N	7/8	22.22	3/4	18.28	1-1/4	31.75	1-1/4	31.75	25.90	21.84	34.54	44.70	41.65
STBM-16-12N	1	25.40	3/4	22.35	1-3/8	34.92	1-1/2	38.10	31.24	26.41	36.83	49.02	42.20
STBM-16-16N	1	25.40	1	22.35	1-3/8	34.92	1-1/2	38.10	31.24	26.41	36.83	49.02	49.70
STBM-20-20N	1-1/4	31.75	1-1/4	27.68	1-11/16	42.86	1-7/8	47.63	41.14	38.86	44.50	66.54	49.75
STBM-24-24N	1-1/2	38.10	1-1/2	34.03	2	50.80	2-1/4	57.15	50.03	45.21	50.80	77.97	60.45
STBM-32-32N	2	50.80	2	45.97	2-3/4	69.82	3	76.20	67.56	62.54	69.80	107.18	70.61

Male Branch Tee

STBM

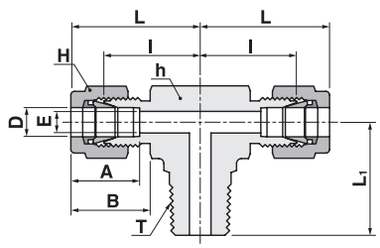

Connects metric tube to female ISO taper thread

Part No.	Tube O.D	T	E	Width across flat		A	B	l	L	L_1
	D	R(PT)	Min.	h	H					
STBM-3M-2R	3	1/8	2.4	12.7	12	12.9	15.3	17.0	23.6	17.8
STBM-3M-4R	3	1/4	2.4	12.7	12	12.9	15.3	18.0	24.6	23.4
STBM-4M-2R	4	1/8	2.4	12.7	12	13.7	16.1	18.8	25.4	18.8
STBM-4M-4R	4	1/4	2.4	12.7	12	13.7	16.1	18.8	25.4	23.4
STBM-6M-2R	6	1/8	4.8	12.7	14	15.3	17.7	19.6	27.0	18.8
STBM-6M-4R	6	1/4	4.8	12.7	14	15.3	17.7	19.6	27.0	23.4
STBM-6M-6R	6	3/8	4.8	17.5	14	15.3	17.7	22.4	29.8	26.2
STBM-6M-8R	6	1/2	4.8	20.6	14	15.3	17.7	24.4	31.8	33.0
STBM-8M-2R	8	1/8	6.4	14.3	16	16.2	18.6	21.3	28.8	19.8
STBM-8M-4R	8	1/4	6.4	14.3	16	16.2	18.6	21.3	28.8	24.4
STBM-8M-6R	8	3/8	6.4	17.5	16	16.2	18.6	23.1	30.6	26.2
STBM-8M-8R	8	1/2	6.4	20.6	16	16.2	18.6	25.1	32.6	33.0
STBM-10M-2R	10	1/8	7.9	17.5	19	17.2	19.5	23.9	31.5	23.6
STBM-10M-4R	10	1/4	7.9	17.5	19	17.2	19.5	23.9	31.5	26.2
STBM-10M-6R	10	3/8	7.9	17.5	19	17.2	19.5	23.9	31.5	26.2
STBM-10M-8R	10	1/2	7.9	20.6	19	17.2	19.5	25.9	33.5	33.0
STBM-12M-4R	12	1/4	9.5	20.6	22	22.8	22.0	25.9	36.0	28.2
STBM-12M-6R	12	3/8	9.5	20.6	22	22.8	22.0	25.9	36.0	28.2
STBM-12M-8R	12	1/2	9.5	20.6	22	22.8	22.0	25.9	36.0	33.0
STBM-12M-12R	12	3/4	9.5	27.0	22	22.8	22.0	29.7	39.8	36.8
STBM-16M-6R	16	3/8	12.7	23.8	25	24.4	22.0	27.9	38.0	30.2
STBM-16M-8R	16	1/2	12.7	23.8	25	24.4	22.0	27.9	38.0	35.1
STBM-16M-12R	16	3/4	12.7	27.0	25	24.4	22.0	29.7	39.8	36.8
STBM-18M-8R	18	1/2	15.1	27.0	30	24.4	22.0	29.7	39.8	36.8
STBM-18M-12R	18	3/4	15.1	27.0	30	24.4	22.0	29.7	39.8	36.8
STBM-20M-8R	20	1/2	15.9	31.8	32	26.0	22.0	34.5	44.6	41.7
STBM-20M-12R	20	3/4	15.9	31.8	32	26.0	22.0	34.5	44.6	41.7
STBM-22M-12R	22	3/4	18.3	31.8	32	26.0	22.0	34.5	44.6	41.7
STBM-22M-16R	22	1	18.3	34.9	32	26.0	22.0	34.5	44.6	46.5
STBM-25M-12R	25	3/4	21.8	34.9	38	31.3	26.5	36.8	49.1	41.7
STBM-25M-16R	25	1	21.8	34.9	38	31.3	26.5	36.8	49.1	46.5

Female Connector

SCF

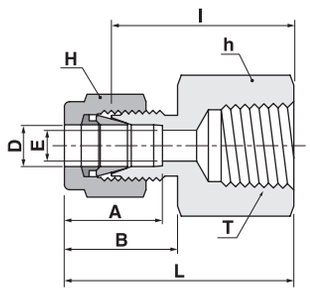

Connects fractional tube to male NPT thread

Part No.	Tube O.D D		T	E	Width across flat h		H		A	B	I	L
	in	mm	N(NPT)	Min.	in	mm	in	mm				
SCF-1-1N	1/16	1.59	1/16	1.27	7/16	11.11	5/16	7.93	8.63	10.92	19.21	23.62
SCF-1-2N	1/16	1.59	1/8	1.27	9/16	14.28	5/16	7.93	8.63	10.92	20.57	24.38
SCF-2-2N	1/8	3.17	1/8	2.28	9/16	14.28	7/16	11.11	12.70	15.24	22.09	28.70
SCF-2-4N	1/8	3.17	1/4	2.28	3/4	19.05	7/16	11.11	12.70	15.24	26.92	33.52
SCF-3-2N	3/16	4.76	1/8	3.04	9/16	14.28	1/2	12.70	13.71	16.00	23.11	29.71
SCF-4-2N	1/4	6.35	1/8	4.82	9/16	14.28	9/16	14.28	15.24	17.78	23.87	31.24
SCF-4-4N	1/4	6.35	1/4	4.82	3/4	19.05	9/16	14.28	15.24	17.78	28.44	35.81
SCF-4-6N	1/4	6.35	3/8	4.82	7/8	22.22	9/16	14.28	15.24	17.78	30.22	37.59
SCF-4-8N	1/4	6.35	1/2	4.82	1-1/16	26.98	9/16	14.28	15.24	17.78	35.05	42.41
SCF-5-2N	5/16	7.93	1/8	6.35	9/16	14.28	5/8	15.87	16.25	18.54	24.63	32.00
SCF-5-4N	5/16	7.93	1/4	6.35	3/4	19.05	5/8	15.87	16.25	18.54	29.46	36.83
SCF-6-2N	3/8	9.52	1/4	7.11	5/8	15.87	11/16	17.46	16.76	19.30	25.40	32.76
SCF-6-4N	3/8	9.52	1/4	7.11	3/4	19.05	11/16	17.46	16.76	19.30	30.22	37.59
SCF-6-6N	3/8	9.52	3/8	7.11	7/8	22.22	11/16	17.46	16.76	19.30	31.75	39.11
SCF-6-8N	3/8	9.52	1/2	7.11	1-1/16	26.98	11/16	17.46	16.76	19.30	36.57	43.94
SCF-6-12N	3/8	9.52	3/4	7.11	1-5/16	33.33	11/16	17.46	16.76	19.30	40.38	47.75
SCF-8-4N	1/2	12.70	1/4	10.41	13/16	20.64	7/8	22.22	22.86	21.84	30.22	40.38
SCF-8-6N	1/2	12.70	3/8	10.41	7/8	22.22	7/8	22.22	22.86	21.84	31.75	41.91
SCF-8-8N	1/2	12.70	1/2	10.41	1-1/16	26.98	7/8	22.22	22.86	21.84	36.57	46.73
SCF-8-12N	1/2	12.70	3/4	10.41	1-5/16	33.33	7/8	22.22	22.86	21.84	38.10	48.26
SCF-10-6N	5/8	15.87	3/8	12.70	15/16	23.81	1	25.40	24.38	21.84	31.75	41.91
SCF-10-8N	5/8	15.87	1/2	12.70	1-1/16	26.98	1	25.40	24.38	21.84	36.57	46.73
SCF-10-12N	5/8	15.87	3/4	12.70	1-5/16	33.33	1	25.40	24.38	21.84	38.10	48.26
SCF-12-8N	3/4	19.05	1/2	15.74	1-1/16	26.98	1-1/8	28.58	24.38	21.84	36.57	46.73
SCF-12-12N	3/4	19.05	3/4	15.74	1-5/16	33.33	1-1/8	28.58	24.38	21.84	38.10	48.26
SCF-14-12N	7/8	22.22	3/4	18.28	1-5/16	33.33	1-1/4	31.75	25.90	21.84	39.62	49.78
SCF-16-12N	1	25.40	3/4	22.35	1-3/8	34.92	1-1/2	38.10	31.24	26.41	41.14	53.34
SCF-16-16N	1	25.40	1	22.35	1-5/8	41.27	1-1/2	38.10	31.24	26.41	50.03	62.23
SCF-20-20N	1-1/4	31.75	1-1/4	27.68	2-1/8	53.98	1-7/8	47.63	41.14	38.86	52.57	74.67
SCF-24-24N	1-1/2	38.10	1-1/2	34.03	2-3/8	60.33	2-1/4	57.15	50.03	45.21	56.13	83.31
SCF-32-32N	2	50.80	2	45.97	2-7/8	73.03	3	76.20	67.56	62.54	64.26	101.60

Female Connector

SCF

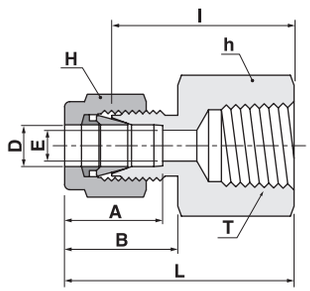

Connects metric tube to male ISO taper thread

Part No.	Tube O.D	T	E	Width across flat		A	B	I	L
	D	R(PT)	Min.	h	H				
SCF-3M-2R	3	1/8	2.4	14	12	12.9	15.3	22.1	28.7
SCF-3M-4R	3	1/4	2.4	19	12	12.9	15.3	26.9	33.5
SCF-4M-2R	4	1/8	2.4	14	12	13.7	16.1	23.1	29.7
SCF-6M-2R	6	1/8	4.8	14	14	15.3	17.7	23.9	31.3
SCF-6M-4R	6	1/4	4.8	19	14	15.3	17.7	28.4	35.8
SCF-6M-6R	6	3/8	4.8	22	14	15.3	17.7	29.5	36.9
SCF-6M-8R	6	1/2	4.8	27	14	15.3	17.7	35.1	42.5
SCF-8M-2R	8	1/8	6.4	15	16	16.2	18.6	24.6	32.1
SCF-8M-4R	8	1/4	6.4	19	16	16.2	18.6	29.5	37.0
SCF-8M-6R	8	3/8	6.4	22	16	16.2	18.6	30.2	37.7
SCF-8M-8R	8	1/2	6.4	27	16	16.2	18.6	35.8	43.3
SCF-10M-2R	10	1/8	7.9	18	19	17.2	19.5	25.4	33.0
SCF-10M-4R	10	1/4	7.9	19	19	17.2	19.5	30.2	37.8
SCF-10M-6R	10	3/8	7.9	22	19	17.2	19.5	31.0	38.6
SCF-10M-8R	10	1/2	7.9	27	19	17.2	19.5	36.6	44.2
SCF-12M-2R	12	1/4	9.5	22	22	22.8	22.0	28.4	38.5
SCF-12M-4R	12	1/4	9.5	22	22	22.8	22.0	30.2	40.3
SCF-12M-6R	12	3/8	9.5	22	22	22.8	22.0	31.0	41.1
SCF-12M-8R	12	1/2	9.5	27	22	22.8	22.0	36.6	46.7
SCF-12M-12R	12	3/4	9.5	35	22	22.8	22.0	38.9	49.0
SCF-15M-8R	15	1/2	11.9	27	27	24.4	22.0	36.6	46.7
SCF-16M-8R	16	1/2	12.7	27	25	24.4	22.0	36.8	46.9
SCF-20M-8R	20	1/2	15.9	30	32	26.0	22.0	37.8	47.9
SCF-20M-12R	20	3/4	15.9	35	32	26.0	22.0	39.6	49.7
SCF-22M-12R	22	3/4	18.3	35	32	26.0	22.0	39.6	49.7
SCF-22M-16R	22	1	18.3	41	32	26.0	22.0	47.8	57.9
SCF-25M-12R	25	3/4	21.8	35	38	31.3	26.5	41.1	53.4
SCF-25M-16R	25	1	21.8	41	38	31.3	26.5	50.0	62.3

Gauge Connector

SCG

See page 32
for SGG gasket

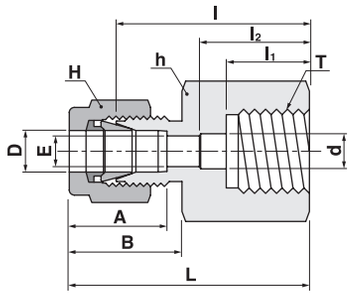

Connects fractional tube to male ISO parallel thread (gauge)

Part No.	Tube O.D D		T	E	Width across flat h		H		A	B	l	l_1	l_2	d	L
	in	mm	G(PF)	Min.	in	mm	in	mm							
SCG-4-2G	1/4	6.35	1/8	4.82	9/16	14.28	9/16	14.28	15.24	17.78	26.30	12.00	17.00	5.60	33.55
SCG-4-4G	1/4	6.35	1/4	4.82	3/4	19.05	9/16	14.28	15.24	17.78	30.22	12.95	17.00	5.60	37.59
SCG-4-6G	1/4	6.35	3/8	4.82	7/8	22.22	9/16	14.28	15.24	17.78	30.22	14.22	18.00	6.60	37.59
SCG-4-8G	1/4	6.35	1/2	4.82	1-1/16	26.98	9/16	14.28	15.24	17.78	36.07	18.80	22.00	7.10	43.43
SCG-5-4G	5/16	7.93	1/4	6.35	3/4	19.05	5/8	15.87	16.25	18.54	30.98	12.95	-	-	38.60
SCG-5-8G	5/16	7.93	1/2	6.35	1-1/16	26.98	5/8	15.87	16.25	18.54	33.53	18.80	-	-	40.89
SCG-6-4G	3/8	9.52	1/4	7.11	3/4	19.05	11/16	17.46	16.76	19.30	31.75	12.95	-	-	39.12
SCG-6-6G	3/8	9.52	3/8	7.11	7/8	22.22	11/16	17.46	16.76	19.30	31.24	14.22	-	-	38.61
SCG-6-8G	3/8	9.52	1/2	7.11	1-1/16	26.98	11/16	17.46	16.76	19.30	34.54	18.80	-	-	41.91
SCG-8-4G	1/2	12.70	1/4	10.41	13/16	20.64	7/8	22.22	22.86	21.84	31.80	12.95	-	-	41.95
SCG-8-6G	1/2	12.70	3/8	10.41	7/8	22.22	7/8	22.22	22.86	21.84	34.29	14.22	-	-	44.45
SCG-8-8G	1/2	12.70	1/2	10.41	1-1/16	26.98	7/8	22.22	22.86	21.84	38.10	18.80	-	-	48.26

Connects metric tube to male ISO parallel thread (gauge)

Part No.	Tube O.D D	T G(PF)	E Min.	Width across flat h	H	A	B	l	l_1	l_2	d	L
SCG-3M-4G	3	1/4	2.4	19	12	12.9	15.3	28.7	13	17.0	5.5	35.3
SCG-6M-4G	6	1/4	4.8	19	14	15.3	17.7	30.2	13	17.0	5.5	37.6
SCG-6M-6G	6	3/8	4.8	24	14	15.3	17.7	30.2	14	18.0	6.5	37.6
SCG-6M-8G	6	1/2	4.8	27	14	15.3	17.7	36.1	19	22.0	7.0	43.5
SCG-8M-4G	8	1/4	6.4	19	16	16.2	18.6	31.0	13	-	5.5	38.5
SCG-8M-6G	8	3/8	6.4	24	16	16.2	18.6	28.7	14	-	6.5	36.2
SCG-8M-8G	8	1/2	6.4	27	16	16.2	18.6	33.5	19	-	7.0	41.0
SCG-10M-4G	10	1/4	7.9	19	19	17.2	19.5	31.8	13	-	5.5	39.4
SCG-10M-6G	10	3/8	7.9	24	19	17.2	19.5	31.2	14	-	6.5	38.8
SCG-10M-8G	10	1/2	7.9	27	19	17.2	19.5	34.5	19	-	7.0	42.1
SCG-12M-4G	12	1/4	9.5	22	22	22.8	22.0	31.8	13	-	5.5	41.9
SCG-12M-6G	12	3/8	9.5	24	22	22.8	22.0	34.3	14	-	6.5	44.4
SCG-12M-8G	12	1/2	9.5	27	22	22.8	22.0	38.1	19	-	7.0	48.2
SCG-20M-8G	20	1/2	15.9	30	32	26.0	22.0	44.2	19	-	7.0	54.3
SCG-22M-8G	22	1/2	9.5	30	32	22.8	22.0	44.2	19	-	7.0	54.3

Bulkhead Female Connector

SCBF

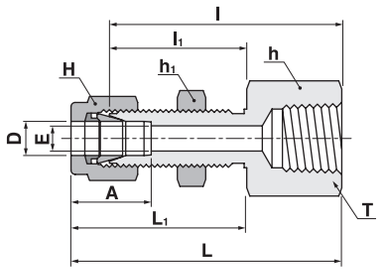

Connects fractional tube to male NPT thread

Part No.	Tube O.D D		T	E	Width across flat h		h_1		H		A	I	I_1	L	L_1	Panel Hole Drill Size	Panel Max. Thickness
	in	mm	N(NPT)	Min.	in	mm	in	mm	in	mm							
SCBF-2-2N	1/8	3.17	1/8	2.28	9/16	14.28	1/2	12.70	7/16	11.11	12.70	38.10	24.63	44.70	31.24	8.33	12.70
SCBF-4-2N	1/4	6.35	1/8	4.82	5/8	15.87	5/8	15.87	9/16	14.28	15.24	39.62	26.16	46.99	33.52	11.50	10.16
SCBF-4-4N	1/4	6.35	1/4	4.82	3/4	19.05	5/8	15.87	9/16	14.28	15.24	44.45	26.16	51.81	33.52	11.50	10.16
SCBF-6-4N	3/8	9.52	1/4	7.11	3/4	19.05	3/4	19.05	11/16	17.46	16.76	47.75	29.46	55.11	36.83	14.68	11.17
SCBF-6-6N	3/8	9.52	3/8	7.11	7/8	22.22	3/4	19.05	11/16	17.46	16.76	49.41	29.46	56.77	36.83	14.68	11.17
SCBF-8-6N	1/2	12.70	3/8	10.41	15/16	23.81	15/16	23.81	7/8	22.22	22.86	51.56	31.75	61.72	41.91	19.44	12.70
SCBF-8-8N	1/2	12.70	1/2	10.41	1-1/16	26.98	15/16	23.81	7/8	22.22	22.86	56.38	31.75	66.54	41.91	19.44	12.70
SCBF-12-12N	3/4	19.05	3/4	15.74	1-5/16	33.33	1-3/16	30.16	1-1/8	28.58	24.38	63.60	37.33	73.51	47.21	25.79	16.76
SCBF-16-16N	1	25.40	1	22.35	1-5/8	41.27	1-5/8	41.27	1-1/2	38.10	31.24	81.04	45.21	93.23	57.40	33.73	19.05
SCBF-20-20N	1-1/4	31.75	1-1/4	27.68	2-1/8	53.98	1-7/8	47.63	1-7/8	47.63	41.14	83.49	47.75	105.59	69.85	41.67	19.05
SCBF-24-24N	1-1/2	38.10	1-1/2	34.03	2-3/8	60.33	2-1/4	57.15	2-1/4	57.15	50.03	87.39	49.27	114.57	76.45	49.61	19.05
SCBF-32-32N	2	50.80	2	45.97	2/1/8	73.03	2-3/4	69.85	3	76.20	67.56	95.30	56.38	132.63	93.71	57.94	19.05

Connects metric tube to male NPT thread

Part No.	Tube O.D D	T N(NPT)	E Min.	Width across flat h	h_1	H	A	I	I_1	L	L_1	Panel Hole Drill Size	Panel Max. Thickness
SCBF-6M-2N	6	1/8	4.8	15.8	15.8	14	15.3	39.6	26.2	469	35.0	11.5	10.2
SCBF-6M-4N	6	1/4	4.8	19.0	16.0	14	15.3	44.4	26.2	51.8	33.6	11.5	10.2
SCBF-8M-4N	8	1/4	6.4	19.0	17.4	16	16.2	46.7	28.6	53.9	35.6	13.1	11.2
SCBF-12M-8N	12	1/2	9.5	27.0	24.0	22	22.8	56.4	31.8	66.5	41.9	19.5	12.7

Female Elbow

SLF

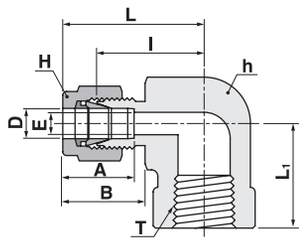

Connects fractional tube to male NPT thread

Part No.	Tube O.D D		T	E	Width across flat h		H		A	B	l	L	L_1
	in	mm	N(NPT)	Min.	in	mm	in	mm					
SLF-2-2N	1/8	3.17	1/8	2.28	1/2	12.70	7/16	11.11	12.70	15.24	18.03	24.63	19.05
SLF-2-4N	1/8	3.17	1/4	2.28	11/16	17.46	7/16	11.11	12.70	15.24	20.82	27.43	22.35
SLF-3-2N	3/16	4.76	1/8	3.04	1/2	12.70	1/2	12.70	13.71	16.00	18.79	25.40	19.05
SLF-4-2N	1/4	6.35	1/8	4.82	1/2	12.70	9/16	14.28	15.24	17.78	19.55	26.92	19.05
SLF-4-4N	1/4	6.35	1/4	4.82	11/16	17.46	9/16	14.28	15.24	17.78	22.35	29.71	22.35
SLF-4-6N	1/4	6.35	3/8	4.82	13/16	20.64	9/16	14.28	15.24	17.78	24.38	31.75	22.35
SLF-4-8N	1/4	6.35	1/2	4.82	1	25.40	9/16	14.28	15.24	17.78	27.17	34.54	28.44
SLF-5-2N	5/16	7.93	1/8	6.35	9/16	14.28	5/8	15.87	16.25	18.54	21.33	28.70	19.05
SLF-5-4N	5/16	7.93	1/4	6.35	11/16	17.46	5/8	15.87	16.25	18.54	23.11	30.48	22.35
SLF-6-2N	3/8	9.52	1/4	7.11	5/8	15.87	11/16	17.46	16.76	19.30	23.11	30.48	19.05
SLF-6-4N	3/8	9.52	1/4	7.11	11/16	17.46	11/16	17.46	16.76	19.30	23.87	31.24	22.35
SLF-6-6N	3/8	9.52	3/8	7.11	13/16	20.64	11/16	17.46	16.76	19.30	25.90	33.27	22.35
SLF-6-8N	3/8	9.52	1/2	7.11	1	25.40	11/16	17.46	16.76	19.30	28.70	36.06	28.44
SLF-8-4N	1/2	12.70	1/4	10.41	13/16	20.64	7/8	22.22	22.86	21.84	25.90	36.06	22.35
SLF-8-6N	1/2	12.70	3/8	10.41	13/16	20.64	7/8	22.22	22.86	21.84	25.90	36.06	22.35
SLF-8-8N	1/2	12.70	1/2	10.41	1	25.40	7/8	22.22	22.86	21.84	28.70	38.86	28.44
SLF-10-6N	5/8	15.87	3/8	12.70	15/16	23.81	1	25.40	24.38	21.84	27.94	38.10	22.35
SLF-10-8N	5/8	15.87	1/2	12.70	1	25.40	1	25.40	24.38	21.84	29.71	39.87	28.44
SLF-12-8N	3/4	19.05	1/2	15.74	1-1/16	26.98	1-1/8	28.58	24.38	21.84	29.71	39.87	28.44
SLF-12-12N	3/4	19.05	3/4	15.74	1-1/4	31.75	1-1/8	28.58	24.38	21.84	34.54	44.70	31.75
SLF-14-12N	7/8	22.22	3/4	18.28	1-1/4	31.75	1-1/4	31.75	25.90	21.84	34.54	44.70	31.75
SLF-16-12N	1	25.40	3/4	22.35	1-3/8	34.92	1-1/2	38.10	31.24	26.41	36.83	49.02	31.75
SLF-16-16N	1	25.40	1	22.35	1-11/16	42.86	1-1/2	38.10	31.24	26.41	41.40	50.29	38.10

Connects metric tube to male NPT thread

Part No.	Tube O.D D	T N(NPT)	E Min.	Width across flat h	H	A	B	l	L	L_1
SLF-6M-2N	6	1/8	4.8	12.70	14	15.3	17.7	19.6	27.0	19.00
SLF-6M-4N	6	1/4	4.8	17.46	14	15.3	17.7	22.4	29.8	22.40
SLF-6M-6N	6	3/8	4.8	20.64	14	15.3	17.7	24.4	31.7	22.40
SLF-6M-8N	6	1/2	4.8	25.40	14	15.3	17.7	27.2	34.6	28.40
SLF-8M-2N	8	1/8	6.4	15.87	16	16.2	18.6	23.1	29.9	19.00
SLF-8M-4N	8	1/4	6.4	17.46	16	16.2	18.6	23.1	30.6	22.40
SLF-8M-8N	8	1/2	6.4	25.40	16	16.2	18.6	28.0	35.2	28.40
SLF-10M-2N	10	1/8	7.9	17.46	19	17.2	19.5	23.9	31.5	19.00
SLF-10M-4N	10	1/4	7.9	20.64	19	17.2	19.5	25.9	33.5	22.40
SLF-10M-6N	10	3/8	7.9	20.64	19	17.2	19.5	25.9	33.5	22.40
SLF-10M-8N	10	1/2	7.9	25.40	19	17.2	19.5	28.7	36.1	28.40
SLF-12M-4N	12	1/4	9.5	20.64	22	22.8	22.0	25.9	36.0	22.40
SLF-12M-6N	12	3/8	9.5	20.64	22	22.8	22.0	25.9	36.2	22.35
SLF-12M-8N	12	1/2	9.5	25.40	22	22.8	22.0	28.7	38.8	28.40
SLF-16M-8N	16	1/2	12.7	26.98	25	24.4	22.0	29.7	39.5	28.40

Female Run Tee

STRF

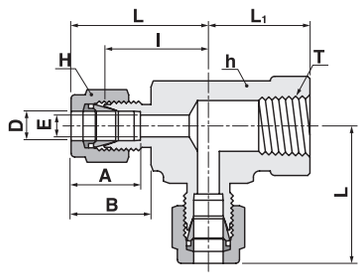

Connects fractional tube to male NPT thread

Part No.	Tube O.D D		T	E	Width across flat h		H		A	B	I	L	L_1
	in	mm	N(NPT)	Min.	in	mm	in	mm					
STRF-2-2N	1/8	3.17	1/8	2.28	1/2	12.70	7/16	11.11	12.70	15.24	18.03	24.63	19.05
STRF-2-4N	1/8	3.17	1/4	2.28	11/16	17.46	7/16	11.11	12.70	15.24	20.82	27.43	22.35
STRF-3-2N	3/16	4.76	1/8	3.04	1/2	12.70	1/2	12.70	13.71	16.00	18.79	25.40	19.05
STRF-4-2N	1/4	6.35	1/8	4.82	1/2	12.70	9/16	14.28	15.24	17.78	19.55	26.92	19.05
STRF-4-4N	1/4	6.35	1/4	4.82	11/16	17.46	9/16	14.28	15.24	17.78	22.35	29.71	22.35
STRF-4-6N	1/4	6.35	3/8	4.82	13/16	20.64	9/16	14.28	15.24	17.78	24.38	31.75	22.35
STRF-4-8N	1/4	6.35	1/2	4.82	1	25.40	9/16	14.28	15.24	17.78	27.17	34.54	28.44
STRF-5-2N	5/16	7.93	1/8	6.35	9/16	14.28	5/8	15.87	16.25	18.54	21.33	28.70	19.05
STRF-5-4N	5/16	7.93	1/4	6.35	11/16	17.46	5/8	15.87	16.25	18.54	23.11	30.48	22.35
STRF-6-2N	3/8	9.52	1/4	7.11	5/8	15.87	11/16	17.46	16.76	19.30	23.11	30.48	19.05
STRF-6-4N	3/8	9.52	1/4	7.11	11/16	17.46	11/16	17.46	16.76	19.30	23.87	31.24	22.35
STRF-6-6N	3/8	9.52	3/8	7.11	13/16	20.64	11/16	17.46	16.76	19.30	25.90	33.27	22.35
STRF-6-8N	3/8	9.52	1/2	7.11	1	25.40	11/16	17.46	16.76	19.30	28.70	36.06	28.44
STRF-8-4N	1/2	12.70	1/4	10.41	13/16	20.64	7/8	22.22	22.86	21.84	25.90	36.06	22.35
STRF-8-6N	1/2	12.70	3/8	10.41	13/16	20.64	7/8	22.22	22.86	21.84	25.90	36.06	22.35
STRF-8-8N	1/2	12.70	1/2	10.41	1	25.40	7/8	22.22	22.86	21.84	28.70	38.86	28.44
STRF-10-6N	5/8	15.87	3/8	12.70	15/16	23.81	1	25.40	24.38	21.84	27.94	38.10	22.35
STRF-10-8N	5/8	15.87	1/2	12.70	1	25.40	1	25.40	24.38	21.84	29.71	39.87	28.44
STRF-12-8N	3/4	19.05	1/2	15.74	1-1/16	26.98	1-1/8	28.58	24.38	21.84	29.71	39.87	28.44
STRF-12-12N	3/4	19.05	3/4	15.74	1-1/4	31.75	1-1/8	28.58	24.38	21.84	34.54	44.70	31.75
STRF-14-12N	7/8	22.22	3/4	18.28	1-1/4	31.75	1-1/4	31.75	25.90	21.84	34.54	44.70	31.75
STRF-16-12N	1	25.40	3/4	22.35	1-3/8	34.92	1-1/2	38.10	31.24	26.41	36.83	49.02	31.75
STRF-16-16N	1	25.40	1	22.35	1-11/16	42.86	1-1/2	38.10	31.24	26.41	41.40	50.29	38.10

Connects metric tube to male NPT thread

Part No.	Tube O.D D	T N(NPT)	E Min.	Width across flat h	H	A	B	I	L	L_1
STRF-6M-2N	6	1/8	4.8	12.70	14	15.3	17.7	19.6	27.0	19.00
STRF-6M-4N	6	1/4	4.8	17.46	14	15.3	17.7	22.4	29.8	22.40
STRF-6M-6N	6	3/8	4.8	20.64	14	15.3	17.7	24.4	31.7	22.40
STRF-6M-8N	6	1/2	4.8	25.40	14	15.3	17.7	27.2	34.6	28.40
STRF-8M-2N	8	1/8	6.4	15.87	16	16.2	18.6	23.1	29.9	19.00
STRF-8M-4N	8	1/4	6.4	17.46	16	16.2	18.6	23.1	30.6	22.40
STRF-8M-6N	8	1/4	6.4	20.64	16	16.2	18.6	25.2	32.4	22.40
STRF-8M-8N	8	1/2	6.4	25.40	16	16.2	18.6	28.0	35.2	28.40
STRF-10M-2N	10	1/8	7.9	17.46	19	17.2	19.5	23.9	31.5	19.00
STRF-10M-4N	10	1/4	7.9	20.64	19	17.2	19.5	25.9	33.5	22.40
STRF-10M-6N	10	3/8	7.9	20.64	19	17.2	19.5	25.9	33.5	22.40
STRF-10M-8N	10	1/2	7.9	25.40	19	17.2	19.5	28.7	36.1	28.40
STRF-12M-4N	12	1/4	9.5	20.64	22	22.8	22.0	25.9	36.0	22.40
STRF-12M-6N	12	3/8	9.5	20.64	22	22.8	22.0	25.9	36.2	22.35
STRF-12M-8N	12	1/2	9.5	25.40	22	22.8	22.0	28.7	38.8	28.40
STRF-16M-8N	16	1/2	12.7	26.98	25	24.4	22.0	29.7	39.5	28.40

Female Branch Tee

STBF

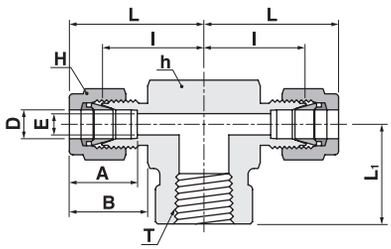

Connects fractional tube to male NPT thread

Part No.	Tube O.D D		T	E	Width across flat h		H		A	B	I	L	L_1
	in	mm	N(NPT)	Min.	in	mm	in	mm					
STBF-2-2N	1/8	3.17	1/8	2.28	1/2	12.70	7/16	11.11	12.70	15.24	18.03	24.63	19.05
STBF-2-4N	1/8	3.17	1/4	2.28	11/16	17.46	7/16	11.11	12.70	15.24	20.82	27.43	22.35
STBF-3-2N	3/16	4.76	1/8	3.04	1/2	12.70	1/2	12.70	13.71	16.00	18.79	25.40	19.05
STBF-4-2N	1/4	6.35	1/8	4.82	1/2	12.70	9/16	14.28	15.24	17.78	19.55	26.92	19.05
STBF-4-4N	1/4	6.35	1/4	4.82	11/16	17.46	9/16	14.28	15.24	17.78	22.35	29.71	22.35
STBF-4-6N	1/4	6.35	3/8	4.82	13/16	20.64	9/16	14.28	15.24	17.78	24.38	31.75	22.35
STBF-4-8N	1/4	6.35	1/2	4.82	1	25.40	9/16	14.28	15.24	17.78	27.17	34.54	28.44
STBF-5-2N	5/16	7.93	1/8	6.35	9/16	14.28	5/8	15.87	16.25	18.54	21.33	28.70	19.05
STBF-5-4N	5/16	7.93	1/4	6.35	11/16	17.46	5/8	15.87	16.25	18.54	23.11	30.48	22.35
STBF-6-2N	3/8	9.52	1/4	7.11	5/8	15.87	11/16	17.46	16.76	19.30	23.11	30.48	19.05
STBF-6-4N	3/8	9.52	1/4	7.11	11/16	17.46	11/16	17.46	16.76	19.30	23.87	31.24	22.35
STBF-6-6N	3/8	9.52	3/8	7.11	13/16	20.64	11/16	17.46	16.76	19.30	25.90	33.27	22.35
STBF-6-8N	3/8	9.52	1/2	7.11	1	25.40	11/16	17.46	16.76	19.30	28.70	36.06	28.44
STBF-8-4N	1/2	12.70	1/4	10.41	13/16	20.64	7/8	22.22	22.86	21.84	25.90	36.06	22.35
STBF-8-6N	1/2	12.70	3/8	10.41	13/16	20.64	7/8	22.22	22.86	21.84	25.90	36.06	22.35
STBF-8-8N	1/2	12.70	1/2	10.41	1	25.40	7/8	22.22	22.86	21.84	28.70	38.86	28.44
STBF-10-6N	5/8	15.87	3/8	12.70	15/16	23.81	1	25.40	24.38	21.84	27.94	38.10	22.35
STBF-10-8N	5/8	15.87	1/2	12.70	1	25.40	1	25.40	24.38	21.84	29.71	39.87	28.44
STBF-12-8N	3/4	19.05	1/2	15.74	1-1/16	26.98	1-1/8	28.58	24.38	21.84	29.71	39.87	28.44
STBF-12-12N	3/4	19.05	3/4	15.74	1-1/4	31.75	1-1/8	28.58	24.38	21.84	34.54	44.70	31.75
STBF-14-12N	7/8	22.22	3/4	18.28	1-1/4	31.75	1-1/4	31.75	25.90	21.84	34.54	44.70	31.75
STBF-16-12N	1	25.40	3/4	22.35	1-3/8	34.92	1-1/2	38.10	31.24	26.41	36.83	49.02	31.75
STBF-16-16N	1	25.40	1	22.35	1-11/16	42.86	1-1/2	38.10	31.24	26.41	41.40	50.29	38.10

Connects metric tube to male NPT thread

Part No.	Tube O.D D	T N(NPT)	E Min.	Width across flat h	H	A	B	I	L	L_1
STBF-6M-2N	6	1/8	4.8	12.70	14	15.3	17.7	19.6	27.0	19.00
STBF-6M-4N	6	1/4	4.8	17.46	14	15.3	17.7	22.4	29.8	22.40
STBF-6M-6N	6	3/8	4.8	20.64	14	15.3	17.7	24.4	31.7	22.40
STBF-6M-8N	6	1/2	4.8	25.40	14	15.3	17.7	27.2	34.6	28.40
STBF-8M-2N	8	1/8	6.4	15.87	16	16.2	18.6	23.1	29.9	19.00
STBF-8M-4N	8	1/4	6.4	17.46	16	16.2	18.6	23.1	30.6	22.40
STBF-8M-6N	8	1/4	6.4	20.64	16	16.2	18.6	25.2	32.4	22.40
STBF-8M-8N	8	1/2	6.4	25.40	16	16.2	18.6	28.0	35.2	28.40
STBF-10M-2N	10	1/8	7.9	17.46	19	17.2	19.5	23.9	31.5	19.00
STBF-10M-4N	10	1/4	7.9	20.64	19	17.2	19.5	25.9	33.5	22.40
STBF-10M-6N	10	3/8	7.9	20.64	19	17.2	19.5	25.9	33.5	22.40
STBF-10M-8N	10	1/2	7.9	25.40	19	17.2	19.5	28.7	36.1	28.40
STBF-12M-4N	12	1/4	9.5	20.64	22	22.8	22.0	25.9	36.0	22.40
STBF-12M-6N	12	3/8	9.5	20.64	22	22.8	22.0	25.9	36.2	22.35
STBF-12M-8N	12	1/2	9.5	25.40	22	22.8	22.0	28.7	38.8	28.40
STBF-16M-8N	16	1/2	12.7	26.98	25	24.4	22.0	29.7	39.5	28.40

Reducer

SR

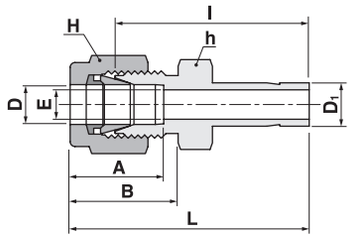

Connects fractional tube to frational S-LOK port

Part No.	Tube O.D				E	Width across flat				A	B	I	L
	D		D_1			h		H					
	in	mm	in	mm	Min.	in	mm	in	mm				
SR-1-2	1/16	1.59	1/8	3.17	1.27	5/16	7.93	5/16	7.93	8.63	10.92	25.40	29.21
SR-1-4	1/16	1.59	1/4	6.35	1.27	5/16	7.93	5/16	7.93	8.63	10.92	57.68	31.49
SR-2-1	1/8	3.17	1/16	1.59	2.28	7/16	11.11	7/16	11.11	12.70	15.24	22.35	28.95
SR-2-2	1/8	3.17	1/8	3.17	2.03	7/16	11.11	7/16	11.11	12.70	15.24	26.92	33.52
SR-2-3	1/8	3.17	3/16	4.76	2.28	7/16	11.11	7/16	11.11	12.70	15.24	27.68	34.29
SR-2-4	1/8	3.17	1/4	6.35	2.28	7/16	11.11	7/16	11.11	12.70	15.24	29.46	36.06
SR-2-6	1/8	3.17	3/8	9.52	2.28	7/16	11.11	7/16	11.11	12.70	15.24	30.98	37.59
SR-2-8	1/8	3.17	1/2	12.70	2.28	9/16	14.28	7/16	11.11	12.70	15.24	37.59	44.19
SR-3-2	3/16	4.76	3/16	4.76	2.03	7/16	11.11	1/2	12.70	13.71	16.00	28.19	34.79
SR-3-4	3/16	4.76	1/4	6.35	3.04	7/16	11.11	1/2	12.70	13.71	16.00	30.48	37.08
SR-4-2	1/4	6.35	1/8	3.17	2.03	1/2	12.70	9/16	14.28	15.24	17.78	29.46	36.83
SR-4-3	1/4	6.35	3/16	4.76	3.04	1/2	12.70	9/16	14.28	15.24	17.78	30.22	37.59
SR-4-4	1/4	6.35	1/4	6.35	4.82	1/2	12.70	9/16	14.28	15.24	17.78	31.75	39.11
SR-4-5	1/4	6.35	1/4	6.35	4.82	1/2	12.70	9/16	14.28	15.24	17.78	32.51	39.87
SR-4-6	1/4	6.35	3/8	9.52	4.82	1/2	12.70	9/16	14.28	15.24	17.78	33.27	40.64
SR-4-8	1/4	6.35	1/2	12.70	4.82	9/16	14.28	9/16	14.28	15.24	17.78	38.86	46.22
SR-4-10	1/4	6.35	5/8	15.87	4.82	11/16	17.46	9/16	14.28	15.24	17.78	40.64	48.00
SR-4-12	1/4	6.35	3/4	19.05	4.82	13/16	20.64	9/16	14.28	15.24	17.78	40.38	47.75
SR-5-6	5/16	7.93	3/8	9.52	6.35	9/16	14.28	5/8	15.87	16.25	18.54	34.54	41.91
SR-5-8	5/16	7.93	5/16	7.93	6.35	9/16	14.28	5/8	15.87	16.25	18.54	40.13	47.49
SR-6-4	3/8	9.52	1/4	6.35	4.82	5/8	15.87	11/16	17.46	16.76	19.30	34.03	41.40
SR-6-6	3/8	9.52	3/8	9.52	7.11	5/8	15.87	11/16	17.46	16.76	19.30	35.81	43.18
SR-6-8	3/8	9.52	1/2	12.70	7.11	5/8	15.87	11/16	17.46	16.76	19.30	41.14	48.51
SR-6-10	3/8	9.52	5/8	15.87	7.11	11/16	17.46	11/16	17.46	16.76	19.30	42.92	50.29
SR-6-12	3/8	9.52	3/4	19.05	7.11	13/16	20.64	11/16	17.46	16.76	19.30	42.92	50.29
SR-8-4	1/2	12.70	1/4	6.35	4.82	13/16	20.64	7/8	22.22	22.86	21.84	34.79	44.95
SR-8-6	1/2	12.70	1/2	12.70	7.11	13/16	20.64	7/8	22.22	22.86	21.84	36.57	46.73
SR-8-8	1/2	12.70	1/2	12.70	9.90	13/16	20.64	7/8	22.22	22.86	21.84	42.16	52.32
SR-8-10	1/2	12.70	5/8	15.87	10.41	13/16	20.64	7/8	22.22	22.86	21.84	43.68	53.84
SR-8-12	1/2	12.70	3/4	19.05	10.41	13/16	20.64	7/8	22.22	22.86	21.84	43.68	53.84
SR-8-16	1/2	12.70	1	25.40	10.41	1-1/16	26.98	7/8	22.22	22.86	21.84	50.03	60.19
SR-10-12	5/8	15.87	3/4	19.05	12.70	1-1/16	26.98	1	25.40	24.38	21.84	44.45	54.61
SR-10-14	5/8	15.87	5/8	15.87	12.70	15/16	23.81	1	25.40	24.38	21.84	45.97	56.13
SR-10-16	5/8	15.87	1	25.40	12.70	15/16	23.81	1	25.40	24.38	21.84	50.80	60.96
SR-12-8	3/4	19.05	1/2	12.70	9.90	1-1/16	26.98	1-1/8	28.58	24.38	21.84	44.45	54.61
SR-12-16	3/4	19.05	1	25.40	15.74	1-1/16	26.98	1-1/8	28.58	24.38	21.84	52.32	62.48
SR-16-20	1	25.40	1-1/4	31.75	22.35	1-3/8	34.93	1-1/2	38.10	31.24	26.41	68.32	80.51
SR-16-24	1	25.40	1-1/2	38.10	22.35	1-5/8	41.28	1-1/2	38.10	31.24	26.41	76.96	89.15
SR-16-32	1	25.40	2	50.80	22.35	2-1/8	53.98	1-1/2	38.10	31.24	26.41	100.33	112.52
SR-20-24	1-1/4	31.75	1-1/2	38.10	27.68	1-7/8	47.63	2-1/4	57.15	41.14	38.86	82.04	104.14
SR-20-32	1-1/4	31.75	2	50.80	27.68	2-1/8	53.98	2-1/4	57.15	41.14	38.86	103.12	125.22
SR-24-32	1-1/2	38.10	2	50.80	34.03	2-1/4	57.15	3	76.20	50.03	45.21	101.14	131.31

Reducer

SR

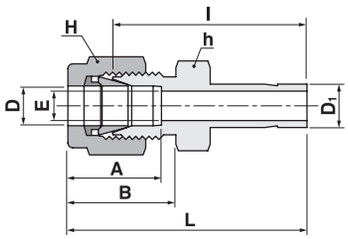

Connects metric tube to frational S-LOK port

Part No.	Tube O.D			E	Width across flat		A	B	I	L
	D	D_1			h	H				
		in	mm	Min.						
SR-2M-2	2	1/8	3.17	1.7	12	12	12.9	15.3	26.9	33.5
SR-3M-2	3	1/8	3.17	2.0	12	12	12.9	15.3	26.9	33.5
SR-3M-4	3	1/4	6.35	2.4	12	12	12.9	15.3	39.5	36.1
SR-4M-4	4	1/4	6.35	2.4	12	12	13.7	16.1	30.5	37.1
SR-6M-2	6	1/8	3.17	2.0	14	14	15.3	17.7	29.5	36.9
SR-6M-4	6	1/4	6.35	4.8	14	14	15.3	17.7	31.8	39.2
SR-6M-5	6	1/4	6.35	4.8	14	14	15.3	17.7	32.5	39.9
SR-6M-6	6	3/8	9.52	4.8	14	14	15.3	17.7	33.3	40.7
SR-6M-8	6	1/2	12.70	4.8	14	14	15.3	17.7	38.9	46.3
SR-8M-6	8	3/8	9.52	6.4	15	16	16.2	18.6	34.5	42.0
SR-8M-8	8	5/16	7.93	6.4	15	16	16.2	18.6	40.1	47.6
SR-10M-6	10	3/8	9.52	7.1	18	19	17.2	19.5	36.6	44.2
SR-10M-8	10	1/2	12.70	7.9	18	19	17.2	19.5	42.2	49.8
SR-12M-8	12	1/2	12.70	9.5	22	22	22.8	22.0	42.2	52.3
SR-12M-12	12	3/4	19.05	9.5	22	22	22.8	22.0	43.7	53.8
SR-18M-12	18	3/4	19.05	15.1	27	30	24.4	22.0	46.0	56.1
SR-18M-16	18	1	25.40	15.1	27	30	24.4	22.0	52.3	62.4
SR-25M-16	25	1	25.40	20.2	35	38	31.3	26.5	57.2	69.5

Connects metric tube to metric S-LOK port

Part No.	Tube O.D		E	Width across flat		A	B	I	L
	D	D_1	Min.	h	H				
SR-2M-3M	2	3	1.7	12	12	12.9	15.3	26.9	35.3
SR-3M-4M	3	4	2.4	12	12	12.9	15.3	28.4	35.0
SR-3M-6M	3	6	2.4	12	12	12.9	15.3	29.5	36.1
SR-3M-10M	3	10	2.4	12	12	12.9	15.3	31.8	38.4
SR-4M-6M	4	6	2.4	12	12	13.7	16.1	30.5	37.1
SR-6M-3M	6	3	1.8	14	14	15.3	17.7	29.5	36.9
SR-6M-8M	6	8	4.8	14	14	15.3	17.7	32.5	39.9
SR-6M-10M	6	10	4.8	14	14	15.3	17.7	33.3	40.7
SR-6M-12M	6	12	4.8	14	14	15.3	17.7	38.9	46.3
SR-8M-6M	8	6	4.6	15	16	16.2	18.6	32.8	40.3
SR-8M-10M	8	10	6.4	15	16	16.2	18.6	34.5	42.0
SR-8M-12M	8	12	6.4	15	16	16.2	18.6	40.1	47.6
SR-10M-6M	10	6	4.6	18	19	17.2	19.5	34.8	42.4
SR-10M-12M	10	12	7.9	18	19	17.2	19.5	42.2	49.8
SR-10M-15M	10	15	7.9	18	19	17.2	19.5	43.7	51.3
SR-10M-18M	10	18	7.9	19	19	17.2	19.5	43.7	51.3
SR-12M-6M	12	6	4.6	22	22	22.8	22.0	34.8	44.9
SR-12M-10M	12	10	7.7	22	22	22.8	22.0	36.6	46.7
SR-12M-16M	12	16	9.5	22	22	22.8	22.0	43.7	53.8
SR-12M-18M	12	18	9.5	22	22	22.8	22.0	43.7	53.8
SR-12M-20M	12	20	9.5	22	22	22.8	22.0	46.0	56.1
SR-12M-22M	12	22	9.5	24	22	22.8	22.0	46.0	56.1
SR-12M-25M	12	25	9.5	27	22	22.8	22.0	52.3	62.4
SR-16M-12M	16	12	9.1	24	25	24.4	22.0	42.9	53.0
SR-18M-12M	18	12	9.1	27	30	24.4	22.0	44.5	54.6
SR-18M-16M	18	16	12.7	27	30	24.4	22.0	46.0	56.1
SR-18M-20M	18	20	15.1	27	30	24.4	22.0	47.5	57.6
SR-18M-22M	18	22	15.1	27	30	24.4	22.0	47.5	57.6
SR-18M-25M	18	25	15.1	27	30	24.4	22.0	52.3	62.4
SR-20M-16M	20	16	12.7	30	32	26.0	22.0	47.8	57.9
SR-20M-18M	20	18	13.9	30	32	26.0	22.0	47.8	57.9
SR-20M-22M	20	22	15.8	30	32	26.0	22.0	49.3	59.4
SR-20M-25M	20	25	15.8	30	32	26.0	22.0	54.1	64.2
SR-22M-18M	22	18	13.9	30	32	26.0	22.0	47.8	57.9
SR-22M-20M	22	20	15.1	30	32	26.0	22.0	49.3	59.4
SR-22M-25M	22	25	18.3	30	32	26.0	22.0	54.1	64.2
SR-25M-18M	25	18	13.9	35	38	31.3	26.5	50.8	63.1
SR-25M-20M	25	20	15.1	35	38	31.3	26.5	52.3	64.6

Elbow Adapter

SLA

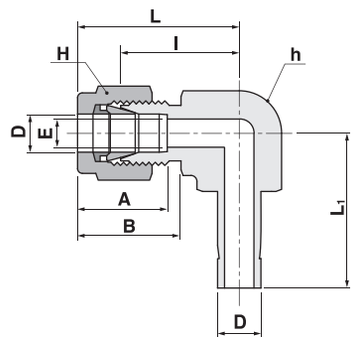

Connects fractional tube to frational S-LOK port

Part No.	Tube O.D D		E	Width across flat h		Width across flat H		A	B	I	L	L_1
	in	mm	Min	in	mm	in	mm					
SLA-1	1/16	1.59	1.27	3/8	9.52	5/16	7.93	8.63	10.92	14.00	17.88	16.00
SLA-2	1/8	3.17	2.28	3/8	9.52	7/16	11.11	12.70	15.24	15.74	22.35	21.00
SLA-3	3/16	4.76	3.04	1/2	12.70	1/2	12.70	13.71	16.00	17.78	24.35	22.50
SLA-4	1/4	6.35	4.82	1/2	12.70	9/16	14.28	15.24	17.78	19.55	26.92	25.00
SLA-5	5/16	7.93	6.35	9/16	14.28	5/8	15.87	16.25	18.54	21.33	28.70	27.10
SLA-6	3/8	9.52	7.11	5/8	15.87	11/16	17.46	16.76	19.30	23.11	30.48	28.80
SLA-8	1/2	12.70	10.41	13/16	20.64	7/8	22.22	22.86	21.84	25.90	36.06	37.30
SLA-10	5/8	15.87	12.70	15/16	23.81	1	25.40	24.38	21.84	28.70	38.80	41.80
SLA-12	3/4	19.05	15.74	1-1/16	26.98	1-1/8	28.58	24.38	21.84	29.71	39.87	42.60
SLA-14	7/8	22.22	18.28	1-1/4	31.75	1-1/4	31.75	25.90	21.84	34.54	44.70	49.40
SLA-16	12	25.40	22.35	1-3/8	34.92	1-1/2	38.10	31.24	26.41	36.83	49.02	54.00

Connects metric tube to metric S-LOK port

Part No.	Tube O.D D	E Min	Width across flat h	Width across flat H	A	B	I	L	L_1
SLA-2M	2	1.7	9.5	12	12.9	15.3	15.7	22.3	20.5
SLA-3M	3	2.4	9.5	12	12.9	15.3	15.7	22.3	20.5
SLA-4M	4	2.4	12.7	12	13.7	16.1	18.8	25.4	23.0
SLA-6M	6	4.8	12.7	14	15.3	17.7	19.6	27.0	25.1
SLA-8M	8	6.4	14.3	16	16.2	18.6	21.3	28.8	26.8
SLA-10M	10	7.9	17.5	19	17.2	19.5	23.9	31.5	29.5
SLA-12M	12	9.5	20.6	22	22.8	22.0	25.9	36.0	37.6
SLA-15M	15	11.9	23.8	25	24.4	22.0	28.7	38.8	42.6
SLA-16M	16	12.7	23.8	25	24.4	22.0	28.7	38.8	42.6
SLA-18M	18	15.1	27.0	30	24.4	22.0	29.7	39.8	42.6
SLA-20M	20	15.9	31.8	32	26.0	22.0	34.5	42.6	47.2
SLA-22M	22	18.3	31.8	32	26.0	22.0	34.5	42.6	47.2
SLA-25M	25	21.8	34.9	38	31.3	26.5	36.8	49.1	54.3
SLA-28M	28	21.8	41.0	46	36.6	36.6	43.2	64.0	65.0

Bulkhead Adapter

SAB

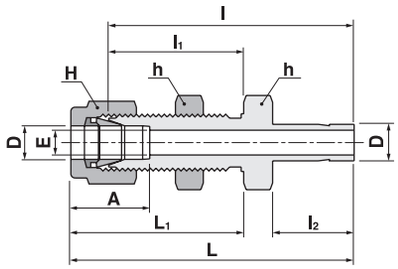

The bulkhead adapter is useful for panel construction when you need to set a direction.

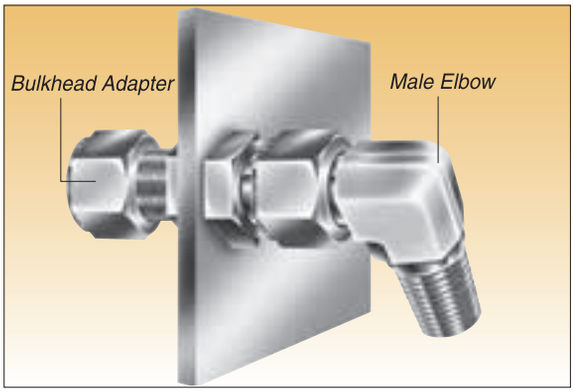

Set a direction

Connects fractional tube to frational S-LOK port

Part No.	Tube O.D D		Tube O.D D_1		E	Width across flat h		Width across flat H		A	l	l_1	l_2	L	L_1	Panel Hole Drill Size	Panel Max. Thickness
	in	mm	in	mm	Min.	in	mm	in	mm								
SAB-2-2	1/8	3.17	1/8	3.17	2.03	1/2	12.70	7/16	11.11	12.70	42.92	24.63	13.45	49.53	31.24	8.33	12.70
SAB-4-4	1/4	6.35	1/4	6.35	4.82	5/8	15.87	9/16	14.28	15.24	48.51	26.16	15.74	55.88	33.52	11.50	10.16
SAB-6-6	3/8	9.52	3/8	9.52	7.11	3/4	19.05	11/16	17.46	16.76	53.84	29.46	17.50	61.21	36.83	14.68	11.17
SAB-8-8	1/2	12.70	1/2	12.70	10.41	15/16	23.81	7/8	22.22	22.86	62.73	31.75	23.11	72.89	41.91	19.44	12.70
SAB-10-10	5/8	15.87	5/8	15.87	12.70	1-1/16	26.98	1	25.40	24.38	65.02	32.51	24.70	75.18	42.67	22.62	12.70
SAB-16-16	1	25.40	1	25.40	20.32	1-5/8	41.28	1-1/2	38.10	31.24	88.13	45.21	31.70	100.33	57.40	33.73	19.05
SAB-20-20	1-1/4	31.75	1-1/4	31.75	27.68	1-7/8	47.63	1-7/8	47.63	41.14	102.07	47.75	42.00	124.17	69.85	41.67	19.05
SAB-24-24	1-1/2	38.10	1-1/2	38.10	34.03	2-1/4	57.15	2-1/4	57.15	50.03	118.33	49.27	51.50	145.51	76.45	49.61	19.05
SAB-32-32	2	50.80	2	50.80	45.97	2-3/4	69.85	3	76.20	57.56	148.79	56.38	68.40	185.82	93.71	57.94	19.05

Male Adapter

SAM

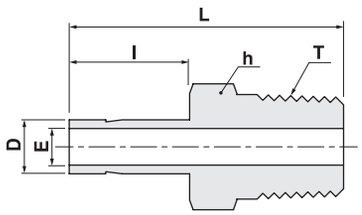

S-LOK Adapter eliminates alignment problems

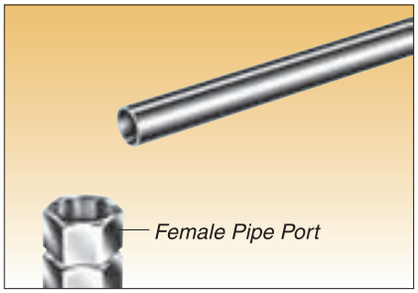

In the direction shown the female port is required to connect with tubing.

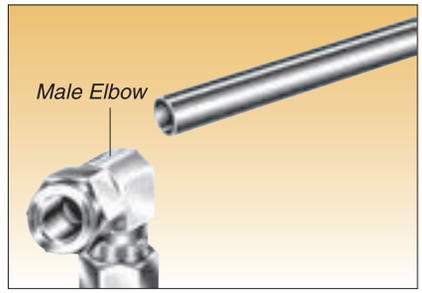

The male elbow is positioning in the wrong direction.

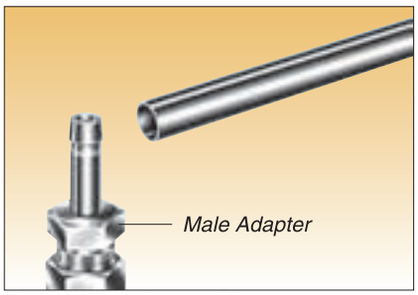

To eliminate the problem,
use a male adapter into the female port.

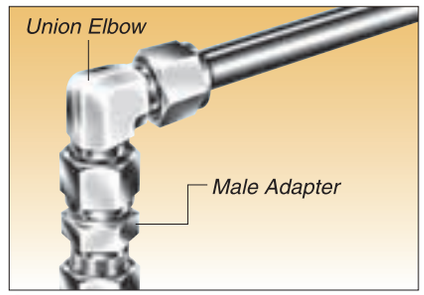

Connect a union elbow to the adapter by tightening the S-LOK port with a wrench while holding the elbow wrench pad in the desired direction

Connects metric tube to female ISO taper thread

These fittings may have a larger opening at the pipe / staight thread end.

Part No.	Tube O.D	T	E	Width across flat	l	L
	D	R(PT)	Min.	h		
SAM-3M-2R	3	1/8	1.9	12	13.15	29.4
SAM-6M-2R	6	1/8	4.1	12	15.75	32.8
SAM-6M-4R	6	1/4	4.1	14	15.75	38.1
SAM-8M-4R	8	1/4	5.6	14	16.50	39.1
SAM-10M-4R	10	1/4	7.1	14	17.50	39.9
SAM-10M-6R	10	3/8	7.1	17	17.50	40.6
SAM-10M-8R	10	1/2	7.1	22	17.50	46.2
SAM-12M-4R	12	1/4	8.8	14	23.50	46.5
SAM-12M-6R	12	3/8	8.8	17	23.50	46.5
SAM-12M-8R	12	1/2	8.8	22	23.50	51.8
SAM-18M-8R	18	1/2	13.9	22	24.90	53.2
SAM-18M-12R	18	3/4	13.9	27	24.90	53.2
SAM-28M-16R	28	1	22.5	35	31.70	74.7
SAM-28M-20R	28	1-1/4	22.5	46	31.70	76.2
SAM-32M-20R	32	1-1/4	26.5	46	40.00	81.0
SAM-32M-24R	32	1-1/2	31.6	55	51.50	92.2

Male Adapter

SAM

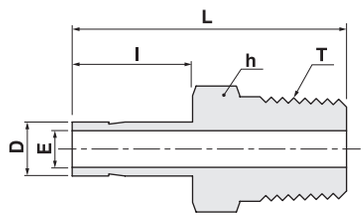

Connects fractional tube to female NPT thread

Part No.	Tube O.D D		T	E	Width across flat h		l	L
	in	mm	N(NPT)	Min.	in	mm		
SAM-2-2N	1/8	3.17	1/8	2.03	7/16	11.11	13.45	29.50
SAM-2-4N	1/8	3.17	1/4	2.03	9/16	14.28	13.45	34.80
SAM-3-2N	3/16	4.76	1/8	3.04	7/16	11.11	14.20	30.22
SAM-3-4N	3/16	4.76	1/4	3.04	9/16	14.28	14.20	35.56
SAM-4-2N	1/4	6.35	1/8	4.31	7/16	11.11	15.75	31.60
SAM-4-4N	1/4	6.35	1/4	4.31	9/16	14.28	15.75	37.08
SAM-4-6N	1/4	6.35	3/8	4.31	11/16	17.46	15.75	37.84
SAM-4-8N	1/4	6.35	1/2	4.31	7/8	22.22	15.75	43.43
SAM-5-2N	5/16	7.93	1/8	5.58	7/16	11.11	16.80	32.76
SAM-5-4N	5/16	7.93	1/4	5.58	9/16	14.28	16.80	38.10
SAM-6-2N	3/8	9.52	1/4	6.86	7/16	11.11	17.50	33.50
SAM-6-4N	3/8	9.52	1/4	6.86	9/16	14.28	17.50	38.90
SAM-6-6N	3/8	9.52	3/8	6.86	11/16	17.46	17.50	39.60
SAM-6-8N	3/8	9.52	1/2	6.86	7/8	22.22	17.50	45.20
SAM-8-4N	1/2	12.70	1/4	9.40	9/16	14.28	23.20	44.50
SAM-8-6N	1/2	12.70	3/8	9.40	11/16	17.46	23.20	45.20
SAM-8-8N	1/2	12.70	1/2	9.40	7/8	22.22	23.20	50.50
SAM-10-6N	5/8	15.87	3/8	11.90	11/16	17.46	24.70	47.40
SAM-10-8N	5/8	15.87	1/2	11.90	7/8	22.22	24.70	52.30
SAM-10-12N	5/8	15.87	3/4	11.90	1-1/16	26.98	24.70	52.30
SAM-12-8N	3/4	19.05	1/2	14.73	7/8	22.22	24.70	52.30
SAM-12-12N	3/4	19.05	3/4	14.73	1-1/16	26.98	24.70	52.30
SAM-12-16N	3/4	19.05	1	14.73	1-3/8	34.92	24.70	57.91
SAM-14-12N	7/8	22.22	3/4	17.27	1-1/16	26.98	26.70	54.30
SAM-16-12N	1	25.40	3/4	20.32	1-1/16	26.98	31.70	58.70
SAM-16-16N	1	25.40	1	20.32	1-3/8	34.92	31.70	66.00
SAM-20-20N	1-1/4	31.75	1-1/4	25.90	1-3/4	44.45	42.00	80.26
SAM-24-24N	1-1/2	38.10	1-1/2	31.75	2-1/8	53.98	51.50	94.48
SAM-32-32N	2	50.80	2	43.68	2-3/4	69.85	68.40	119.38

Female Adaper

SAF

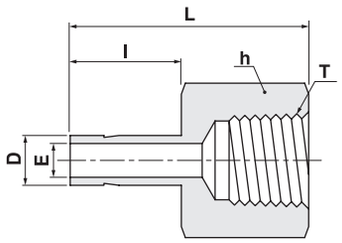

Connects fractional tube to male NPT thread

Part No.	Tube O.D D		T	E	Width across flat h		l	L
	in	mm	N(NPT)	Min.	in	mm		
SAF-2-2N	1/8	3.17	1/8	2.03	9/16	14.28	13.45	31.50
SAF-2-4N	1/8	3.17	1/4	2.03	3/4	19.05	13.45	35.30
SAF-3-2N	3/16	4.76	1/8	3.04	9/16	14.28	14.20	32.00
SAF-3-4N	3/16	4.76	1/4	3.04	3/4	19.05	14.20	35.81
SAF-4-2N	1/4	6.35	1/8	4.31	9/16	14.28	15.75	33.02
SAF-4-4N	1/4	6.35	1/4	4.31	3/4	19.05	15.75	37.10
SAF-4-6N	1/4	6.35	3/8	4.31	7/8	22.22	15.75	39.37
SAF-4-8N	1/4	6.35	1/2	4.31	1-1/16	26.98	15.75	45.50
SAF-5-2N	5/16	7.93	1/8	5.58	9/16	14.28	16.80	34.29
SAF-5-4N	5/16	7.93	1/4	5.58	3/4	19.05	16.80	37.59
SAF-6-2N	3/8	9.52	1/4	6.86	9/16	14.28	17.50	34.29
SAF-6-4N	3/8	9.52	1/4	6.86	3/4	19.05	17.50	38.10
SAF-6-6N	3/8	9.52	3/8	6.86	7/8	22.22	17.50	40.38
SAF-6-8N	3/8	9.52	1/2	6.86	1-1/16	26.98	17.50	46.73
SAF-8-4N	1/2	12.70	1/4	9.40	3/4	19.05	23.20	43.43
SAF-8-6N	1/2	12.70	3/8	9.40	7/8	22.22	23.20	45.46
SAF-8-8N	1/2	12.70	1/2	9.40	1-1/16	26.98	23.20	51.80
SAF-10-6N	5/8	15.87	3/8	11.90	7/8	22.22	24.70	48.26
SAF-10-8N	5/8	15.87	1/2	11.90	1-1/16	26.98	24.70	53.84
SAF-10-12N	5/8	15.87	3/4	11.90	1-5/16	33.33	24.70	55.37
SAF-12-8N	3/4	19.05	1/2	14.73	1-1/16	26.98	24.70	52.83
SAF-12-12N	3/4	19.05	3/4	14.73	1-5/16	33.33	24.70	54.86
SAF-12-16N	3/4	19.05	1	14.73	1-5/8	41.27	24.70	58.42
SAF-14-12N	7/8	22.22	3/4	17.27	1-5/16	33.33	26.70	57.15
SAF-16-12N	1	25.40	3/4	20.32	1-5/16	33.33	31.70	60.70
SAF-16-16N	1	25.40	1	20.32	1-5/8	41.27	31.70	64.26
SAF-20-20N	1-1/4	31.75	1-1/4	25.90	2-1/8	53.98	42.00	77.72
SAF-24-24N	1-1/2	38.10	1-1/2	31.75	2-3/8	60.33	51.50	88.90
SAF-32-32N	2	50.80	2	43.68	2-7/8	73.03	68.40	107.44

Connects metric tube to male ISO taper thread

Part No.	Tube O.D	T	E	Width across flat	l	L
	D	R(PT)	Min.	h		
SAF-3M-2R	3	1/8	1.9	14	13.15	31.15
SAF-6M-2R	6	1/8	4.1	14	15.75	32.50
SAF-6M-4R	6	1/4	4.1	19	15.75	37.10
SAF-8M-4R	8	1/4	5.6	19	16.50	37.60
SAF-10M-4R	10	1/4	7.1	19	17.50	38.10
SAF-10M-6R	10	3/8	7.1	22	17.50	40.10
SAF-10M-8R	10	1/2	7.1	27	17.50	46.50
SAF-12M-4R	12	1/4	8.8	19	23.50	43.70
SAF-12M-6R	12	3/8	8.8	22	23.50	46.00
SAF-12M-8R	12	1/2	8.8	27	23.50	52.30
SAF-18M-12R	18	3/4	13.9	35	24.90	54.80

Gauge Adapter

SAG

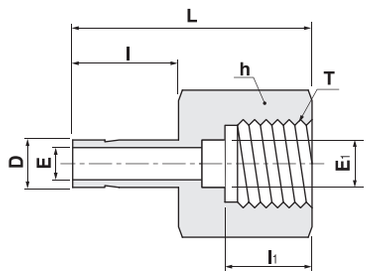

Connects fractional tube to male ISO parallel thread

Part No.	Tube O.D D		T	E	E_1	Width across flat h		l	l_1	L
	in	mm	G(PF)	Min.		in	mm			
SAF-4-2G	1/4	6.35	1/8	4.31	4.57	9/16	14.28	15.75	12.0	32.00
SAF-4-4G	1/4	6.35	1/4	4.31	5.50	3/4	19.05	15.75	12.9	35.30
SAF-6-6G	3/8	9.52	3/8	6.50	6.50	7/8	22.22	17.50	16.0	39.37
SAF-8-8G	1/2	12.70	1/2	9.40	7.00	1-1/16	26.98	23.20	18.9	45.72

Connects metric tube to male ISO parallel thread

Part No.	Tube O.D D	T G(PF)	E Min.	E_1	Width across flat h	l	l_1	L
SAG-6M-2G	6	1/8	4.1	4.0	14	15.75	12.0	32.0
SAG-6M-4G	6	1/4	4.1	5.5	19	15.75	13.0	35.3
SAG-6M-6G	6	3/8	4.1	6.5	24	15.75	14.2	38.4
SAG-6M-8G	6	1/2	4.1	7.0	27	15.75	18.9	42.9
SAG-8M-4G	8	1/4	5.6	5.5	19	16.5	13.0	33.0
SAG-8M-6G	8	3/8	5.6	6.5	24	16.5	14.2	38.9
SAG-8M-8G	8	1/2	5.6	7.0	27	16.5	18.9	43.7
SAG-10M-4G	10	1/4	7.1	5.5	19	17.5	13.0	34.5
SAG-10M-6G	10	3/8	7.1	6.5	24	17.5	14.2	36.1
SAG-10M-8G	10	1/2	7.1	7.0	27	17.5	18.9	40.1
SAG-12M-4G	12	1/4	8.8	5.5	19	23.5	13.0	40.1
SAG-12M-6G	12	3/8	8.8	6.5	24	23.5	14.2	44.7
SAG-12M-8G	12	1/2	8.8	7.0	27	23.5	18.9	48.8
SAG-15M-8G	15	1/2	12.7	7.0	27	24.65	18.9	49.0
SAG-16M-8G	16	1/2	12.7	7.0	27	24.6	18.9	49.0
SAG-18M-8G	18	1/2	13.9	7.0	27	24.9	18.9	49.3
SAG-22M-8G	22	1/2	18.3	7.0	27	26.6	18.9	52.0
SAG-25M-8G	25	1/2	19.8	7.0	30	31.7	18.9	56.1

Port Connector

SCP

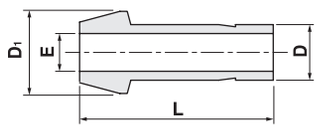

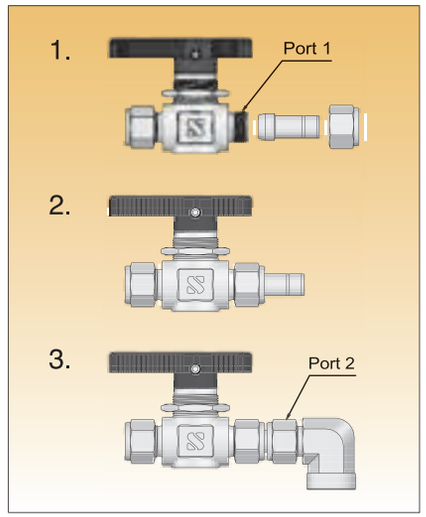

S-LOK port connector facilitates close connection to another port.

Installation Instructions

1. Remove the nut and ferrules from port 1 and set nut only(no ferrules) over the port connector
2. With a wrench, 1/4" turn from the finger-tight position. (1/8 turn for 1/8", 3/16" and 2mm, 3mm and 4mm)
3. Insert the other end of port connector into port 2 and tighten nut 1-1/4 turns with wrench. for 1/8", 3mm only 3/4 turn from finger tight.

Connects two fractional S-LOK ports

Part No.	Tube O.D D		E	D_1	L
	in	mm	Min		
SCP-1	1/16	1.59	1.00	3.30	13.72
SCP-2	1/8	3.17	2.03	6.09	22.35
SCP-4	1/4	6.35	4.31	9.39	24.64
SCP-5	5/16	7.93	5.58	10.92	25.90
SCP-6	3/8	9.52	6.86	12.70	26.16
SCP-8	1/2	12.70	9.40	15.74	35.81
SCP-12	3/4	19.05	14.73	22.09	37.33
SCP-16	1	25.40	20.32	28.44	48.00

Connects two metric S-LOK ports

Part No.	Tube O.D D	E Min	D_1	L
SCP-3M	3	1.9	6.0	22.2
SCP-4M	4	2.2	7.0	25.8
SCP-6M	6	4.1	9.0	24.6
SCP-8M	8	5.6	11.0	27.2
SCP-10M	10	7.1	13.1	26.1
SCP-12M	12	8.8	15.0	35.8
SCP-15M	15	11.2	19.0	37.4
SCP-16M	16	12.0	19.0	37.4
SCP-18M	18	13.9	21.0	37.4
SCP-20M	20	15.5	23.0	38.9
SCP-22M	22	17.9	25.0	39.2
SCP-25M	25	19.9	28.0	48.0
SCP-28M	28	22.5	34.3	63.5
SCP-32M	32	26.5	39.5	69.7
SCP-38M	38	31.6	47.1	81.9

Reducing
Port Connector

SCRP

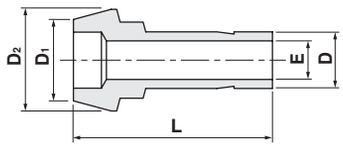

Connects two fractional S-LOK ports

Part No.	Tube O.D				E	D_2	L
	D_1		D				
	in	mm	in	mm	Min		
SCRP-2-1	1/8	3.17	1/16	1.59	1.00	6.10	17.27
SCRP-4-2	1/4	6.35	1/8	3.17	2.00	9.39	22.60
SCRP-6-2	3/8	9.52	1/8	3.17	2.00	12.70	23.11
SCRP-6-4	3/8	9.52	1/4	6.35	4.31	12.70	24.89
SCRP-8-4	1/2	12.70	1/4	6.35	4.31	15.74	29.21
SCRP-8-6	1/2	12.70	3/8	9.52	6.86	15.74	30.48
SCRP-12-8	3/4	19.05	1/2	12.70	9.40	22.09	37.85
SCRP-16-8	1	25.40	1/2	12.70	9.40	28.40	42.67
SCRP-16-12	1	25.40	3/4	19.05	14.73	28.40	43.43

Connects two metric S-LOK ports

Part No.	Tube O.D		E	D_2	L
	D_1	D			
SCRP-6M-3M	6	3	1.9	9.0	22.6
SCRP-8M-6M	8	6	4.1	11.0	24.7
SCRP-10M-6M	10	6	4.1	13.1	25.0
SCRP-10M-8M	10	8	5.6	13.1	26.0
SCRP-12M-6M	12	6	4.1	15.0	29.1
SCRP-12M-8M	12	8	5.6	15.0	29.8
SCRP-12M-10M	12	10	7.1	15.0	30.4
SCRP-16M-6M	16	6	4.1	19.0	30.4
SCRP-16M-12M	16	12	8.8	19.0	36.2
SCRP-28M-25M	28	25	19.8	34.3	56.5
SCRP-32M-25M	32	25	19.8	39.5	60.3
SCRP-38M-25M	38	25	19.8	47.1	65.8

AN Union

SUA

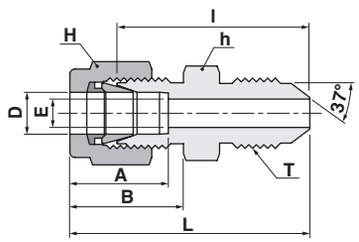

Connects fractional tube to AN flared tube

Part No.	Tube O.D D		AN Tube Flare Size		Straight Thread	E	Width across flat h		Width across flat H		A	B	I	L
	in	mm	in	mm	T	Min.	in	mm	in	mm				
SUA-1-2	1/16	1.59	1/8	3.17	5/16-24	1.27	7/16	11.11	5/16	7.93	8.63	10.92	23.36	27.17
SUA-2-2	1/8	3.17	1/8	3.17	5/16-24	1.52	7/16	11.11	7/16	11.11	12.70	15.24	24.89	31.49
SUA-2-4	1/8	3.17	1/4	6.35	7/16-20	2.28	1/2	12.70	7/16	11.11	12.70	15.24	28.44	35.05
SUA-4-4	1/4	6.35	1/4	6.35	7/16-20	4.31	1/2	12.70	9/16	14.28	15.24	17.78	30.22	37.59
SUA-5-5	5/16	7.93	5/16	7.93	1/2-20	5.84	9/16	14.28	5/8	15.87	16.25	18.54	30.98	38.35
SUA-6-4	3/8	9.52	1/4	6.35	7/16-20	4.31	5/8	15.87	11/16	17.46	16.76	19.30	32.25	39.62
SUA-6-6	3/8	9.52	3/8	9.52	9/16-18	7.11	5/8	15.87	11/16	17.46	16.76	19.30	32.25	39.62
SUA-8-8	1/2	12.70	1/2	12.70	3/4-16	9.90	13/16	20.64	7/8	22.22	22.86	21.84	35.81	45.97
SUA-12-12	3/4	19.05	3/4	19.05	1-1/16-12	15.49	1-1/8	28.58	1-1/8	28.58	24.38	21.84	43.18	53.34
SUA-16-16	1	25.40	1	25.40	1-5/16-12	21.33	1-3/8	34.92	1-1/2	38.10	31.24	26.41	49.27	61.46
SUA-20-20	1-1/4	31.75	1-1/4	31.75	1-5/8-12	27.68	1-3/4	44.45	1-7/8	47.63	41.14	38.86	55.46	77.56
SUA-24-24	1-1/2	38.10	1-1/2	38.10	1-7/8-12	34.03	2-1/8	53.98	2-1/4	57.15	50.03	45.21	63.07	90.25
SUA-32-32	2	50.80	2	50.80	2-1/2-12	45.97	2-3/4	69.85	3	76.20	67.56	62.73	83.24	120.57

AN Bulkhead Union

SUBA

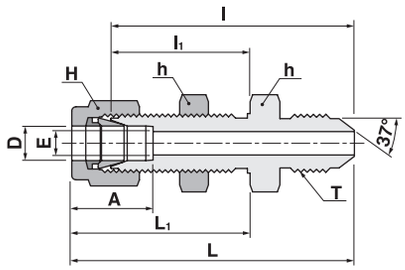

Connects fractional tube to AN flared tube

Part No.	Tube O.D D		AN Tube Flare Size		Straight Thread	E	Width across flat h		Width across flat H		A	l	l_1	L	L_1	Panel Hole Drill Size	Panel Max. Thickness
	in	mm	in	mm	T	Min.	in	mm	in	mm							
SUBA-2-2	1/8	3.17	1/8	3.17	5/16-24	1.52	1/2	12.70	7/16	11.11	12.70	40.85	24.63	47.45	31.23	8.33	12.70
SUBA-4-4	1/4	6.35	1/4	6.35	7/16-20	4.31	5/8	15.87	9/16	14.28	15.24	46.48	26.16	53.84	33.52	11.50	10.16
SUBA-6-6	3/8	9.52	3/8	9.52	9/16-18	7.11	3/4	19.05	11/16	17.46	16.76	49.78	29.46	57.15	36.83	14.68	11.17
SUBA-8-8	1/2	12.70	1/2	12.70	3/4-16	9.90	5/16	23.81	7/8	22.22	22.86	55.62	31.75	65.78	41.91	19.44	12.70
SUBA-12-12	3/4	19.05	3/4	19.05	1-1/16-12	15.49	1-3/16	30.16	1-1/8	28.58	24.38	68.83	37.33	78.99	47.49	25.79	16.76
SUBA-16-16	1	25.40	1	25.40	1-5/16-12	21.33	1-5/8	41.27	1-1/2	38.10	31.24	80.26	45.21	92.45	57.40	33.73	19.05
SUBA-20-20	1-1/4	31.75	1-1/4	31.75	1-5/8-12	27.68	1-7/8	47.36	1-7/8	47.63	41.14	86.37	47.75	108.47	69.85	41.67	19.05
SUBA-24-24	1-1/2	38.10	1-1/2	38.10	1-7/8-12	34.03	2-1/4	57.15	2-1/4	57.15	50.03	94.33	49.27	121.51	76.45	49.61	19.05
SUBA-32-32	2	50.80	2	50.80	2-1/2-12	45.97	2-3/4	69.85	3	76.20	67.56	114.29	56.38	151.62	93.71	16.27	19.05

AN Adapter

SAA

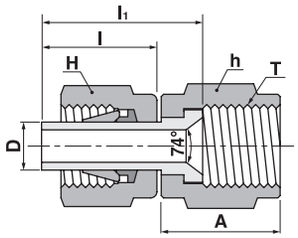

Connects fractional S-LOK port to male AN

Part No.	Tube O.D D		AN Tube Flare Size		Straight Thread	Width across flat h		Width across flat H		A	l	l_1
	in	mm	in	mm	T	in	mm	in	mm			
SAA-2-2	1/8	3.17	1/8	3.17	5/16-24	3/8	9.52	7/16	11.11	13.71	13.46	18.54
SAA-2-4	1/8	3.17	1/4	6.35	7/16-20	9/16	14.28	7/16	11.11	15.74	13.46	19.05
SAA-4-4	1/4	6.35	1/4	6.35	7/16-20	9/16	14.28	9/16	14.28	15.74	15.74	21.33
SAA-6-6	3/8	9.52	3/8	9.52	9/16-18	11/16	17.46	11/16	17.46	18.28	17.52	24.89
SAA-8-8	1/2	12.70	1/2	12.70	3/4-16	7/8	22.22	7/8	22.22	21.59	23.11	31.75

SAE Fittings

S-LOK SAE straight O-Ring seal fittings are of positionable feature and provide connection tube to straight thread boss. Further this has an advantage of eliminating welding and brazing process when used as bulkhead fitting on thin wall tanks or vessels.

These fittings are designed and manufactured to SAE stnadards as below:

Male or external fitting end dimensions to SAE J514
Straight thread to SAE J475(equivalent to ANSI B1,1 or ISO R725)
Female or internal straight thread boss to SAEJ1926.See diagram below.

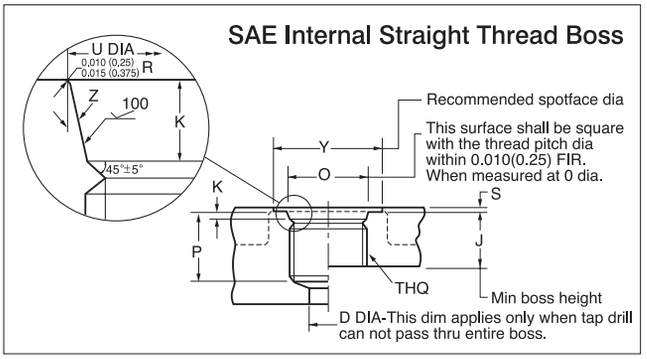

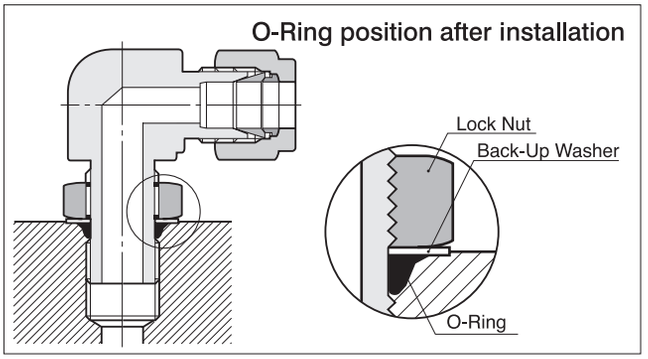

Details of SAE Internal Straight Thread Boss

Nominal Tube O.D	Thread Size	D	J	K	O	P[d]	U[a]	Y[c]	S[bc]	Z
		Min.	Min.	(±0.2)	Min.	Min.	( )		Max	(±1°)
1/8	5/16-24	1.6	10.0	1.9	11.0	12.0	9.1	17.0	1.6	12°
3/16	3/8-24	3.2	10.0	1.9	13.0	12.0	10.7	19.0	1.6	12°
1/4	7/16-20	4.4	11.5	2.4	15.0	14.0	12.4	21.0	1.6	12°
5/16	1/2-20	6.0	11.5	2.4	16.0	14.0	14.0	23.0	1.6	12°
3/8	9/16-18	7.5	12.7	2.5	18.0	15.5	15.6	25.0	1.6	12°
1/2	3/4-16	10.0	14.3	2.5	22.0	17.5	20.6	30.0	2.4	15°
5/8	7/8-14	12.5	16.7	2.5	26.0	20.0	23.9	34.0	2.4	15°
3/4	1-1/16-12	16.0	19.0	3.2	32.0	23.0	29.2	41.0	2.4	15°
7/8	1-3/16-12	18.0	19.0	3.2	35.0	23.0	32.3	45.0	2.4	15°
1	1-5/16-12	21.0	19.0	3.2	38.0	23.0	35.5	49.0	3.2	15°
1-1/4	1-5/8-12	27.0	19.0	3.2	48.0	23.0	43.5	58.0	3.2	15°
1-1/2	1-7/8-12	33.0	19.0	3.2	54.0	23.0	49.8	65.0	3.2	15°
2	2-1/2-12	70.0	19.0	3.2	70.0	23.0	65.7	88.0	3.2	15°

a. Diameter U shall be concentric with the thread pitch diameter within 0.13 full indicator reading(FIR) and shall be free from longitudinal and spiral tool marks. Annular tool marks up to 2.5 micro meters max. shall be permissble.
b. This is the maximum recommended spotface depth to permit sufficient wrench grip for the proper tightening of the fitting or locknut.
c. If the face of the boss is on a machined surface, dimensions Y and S need not apply as long as R 0.25/ 0.375 is maintained to avoid damage to the O-Ring during installation.
d. Tap drill depths given require the use of bottoming taps to produce the specified full thread lengths. Where standard taps are used, the tap drill depths must be increased accordingly.

O-ring and straight thread size for SAE fitting bosses

Nominal Tube O.D	Port Size	Thread Size	O-ring Size No.	O-ring I.D in	O-ring Cross Section in
1/8	2	5/16-24	902	0.239	0.064
3/16	3	3/8-24	903	0.301	0.064
1/4	4	7/16-20	904	0.351	0.072
5/16	5	1/2-20	905	0.414	0.072
3/8	6	9/16-18	906	0.468	0.078
1/2	8	3/4-16	908	0.644	0.087
5/8	10	7/8-14	910	0.755	0.097
3/4	12	1-1/16-12	912	0.924	0.116
7/8	14	1-3/16-12	914	1.048	0.116
1	16	1-5/16-12	916	1.171	0.116
1-1/4	20	1-5/8-12	920	1.475	0.118
1-1/2	24	1-7/8-12	924	1.720	0.118
2	32	2-1/2-12	932	2.337	0.118

Installation Instruction

Step 1. Ensure the locknut is fully raisesd.

Step 2. Lubricate the O-Ring with a light oil or petroleum and turn the fitting into the straight thread boss until the metal washer is in contact with the boss.

Step 3. Position the fitting by backing it out(not more than 1turn counter-clockwise)until the S-LOK fitting is oriented in the desired direction.

Step 4. With a back up wrech, hold the wrech pad and tighten the locknut until the washer is set against the face of the boss.

SAE Male Connector

SMCS

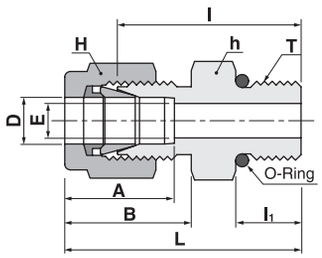

Connects fractional tube to SAE straight thread boss

These fittings may have a larger opening at the pipe / staight thread end.

Part No.	Tube O.D D		Straight Thread	E	Width across flat h		H		A	B	I	l_1	L	O-Ring Unifom Size No.
	in	mm	T	Min.	in	mm	in	mm						
SMCS-2-2U	1/8	3.17	5/16-24	2.28	7/16	11.11	7/16	11.11	12.70	15.24	23.26	7.62	29.97	-902
SMCS-4-4U	1/4	6.35	7/16-20	4.82	9/16	14.28	9/16	14.28	15.24	17.78	26.67	9.14	34.03	-904
SMCS-4-6U	1/4	6.35	9/16-18	4.82	11/16	17.46	9/16	14.28	15.24	17.78	28.19	9.90	35.56	-906
SMCS-4-8U	1/4	6.35	3/4-16	4.82	7/8	22.22	9/16	14.28	15.24	17.78	30.22	11.17	37.59	-908
SMCS-4-10U	1/4	6.35	7/8-14	4.82	1	25.40	9/16	14.28	15.24	17.78	33.27	12.70	40.64	-910
SMCS-5-5U	5/16	7.93	1/2-20	5.84	5/8	15.87	5/8	15.87	16.25	18.54	27.43	9.14	34.79	-905
SMCS-6-4U	3/8	9.52	7/16-20	5.08	5/8	15.87	11/16	17.46	16.76	19.30	28.19	9.14	35.56	-904
SMCS-6-6U	3/8	9.52	9/16-18	7.11	11/16	17.46	11/16	17.46	16.76	19.30	29.71	9.90	37.08	-906
SMCS-6-8U	3/8	9.52	3/4-16	7.11	7/8	22.22	11/16	17.46	16.76	19.30	31.75	11.17	39.11	-908
SMCS-6-10U	3/8	9.52	7/8-14	7.11	1	25.40	11/16	17.46	16.76	19.30	34.79	12.70	42.16	-910
SMCS-8-6U	1/2	12.70	9/16-18	7.11	13/16	20.64	7/8	22.22	22.86	21.84	28.95	9.90	39.11	-906
SMCS-8-8U	1/2	12.70	3/4-16	10.41	7/8	22.22	7/8	22.22	22.86	21.84	31.75	11.17	41.91	-908
SMCS-8-10U	1/2	12.70	7/8-14	10.41	1	25.40	7/8	22.22	22.86	21.84	34.79	12.70	44.95	-910
SMCS-8-12U	1/2	12.70	1-1/16-12	10.41	1-1/4	31.75	7/8	22.22	22.86	21.84	38.86	14.98	49.02	-912
SMCS-10-8U	5/8	15.87	3/4-16	10.66	15/16	23.81	1	25.40	24.38	21.84	31.75	11.17	41.91	-908
SMCS-10-10U	5/8	15.87	7/8-14	12.70	1	25.40	1	25.40	24.38	21.84	35.05	12.70	45.21	-910
SMCS-12-8U	3/4	19.05	3/4-16	10.66	1-1/16	26.98	1-1/8	28.58	24.38	21.84	35.81	11.17	45.97	-908
SMCS-12-12U	3/4	19.05	1-1/16-12	15.74	1-1/4	31.75	1-1/8	28.58	24.38	21.84	38.86	14.98	49.02	-912
SMCS-14-14U	7/8	22.22	1-3/16-12	18.28	1-3/8	34.92	1-1/4	31.75	25.90	21.84	38.86	14.98	49.02	-914
SMCS-16-12U	1	25.40	1-1/16-12	16.76	1-3/8	34.92	1-1/2	38.10	31.24	26.41	41.14	14.98	53.34	-912
SMCS-16-16U	1	25.40	1-5/16-12	22.35	1-1/2	38.10	1-1/2	38.10	31.24	26.41	42.16	14.98	54.35	-916
SMCS-20-20U	1-1/4	31.75	1-5/8-12	27.68	1-7/8	47.63	1-7/8	47.63	41.14	38.86	46.22	14.98	68.32	-920
SMCS-24-24U	1-1/2	38.10	1-7/8-12	34.03	2-1/8	53.98	2-1/4	57.15	50.03	45.21	50.54	14.98	77.72	-924
SMCS-32-32U	2	50.80	2-1/2-12	45.97	2-3/4	69.85	3	76.20	67.56	62.73	64.26	14.98	101.60	-932

Positiopnable
SAE Male Elbow

SLS

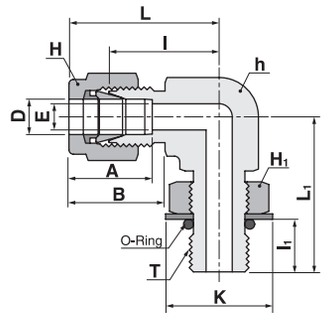

Connects fractional tube to SAE straight thread boss
These fittings may have a larger opening at the pipe / staight thread end.

Part No.	Tube O.D D		Straight Thread	E	Width across flat h		H		H_1		A	B	I	I_1	L	L_1	K	O-Ring Unifom Size No.
	in	mm	T	Min.	in	mm	in	mm	in	mm								
SLS-4-4U	1/4	6.35	7/16-20	4.82	1/2	12.00	9/16	14.28	9/16	14.28	15.24	17.78	21.08	9.90	28.44	28.44	16.51	-904
SLS-5-5U	5/16	7.93	1/2-20	5.84	9/16	14.28	5/8	15.87	5/8	15.87	16.25	18.54	22.86	9.90	30.22	29.46	18.28	-905
SLS-6-6U	3/8	9.52	9/16-18	7.11	5/8	15.87	11/16	17.46	11/16	17.46	16.76	19.30	24.63	11.17	32.00	32.25	20.06	-906
SLS-6-8U	3/8	9.52	3/4-16	7.11	13/16	20.64	11/16	17.46	7/8	22.22	16.76	19.30	27.43	12.70	34.79	37.84	25.65	-908
SLS-8-8U	1/2	12.70	3/4-16	10.41	13/16	20.64	7/8	22.22	7/8	22.22	22.86	21.84	27.43	12.70	37.59	37.84	25.65	-908
SLS-10-10U	5/8	15.87	7/8-14	12.70	1	25.40	1	25.40	1	25.40	24.38	21.84	29.46	14.22	39.62	43.43	29.46	-910
SLS-12-12U	3/4	19.05	1-1/16-12	15.74	1-1/16	26.98	1-1/8	28.58	1-1/4	31.75	24.38	21.84	31.24	16.76	41.40	48.76	36.57	-912
SLS-14-14U	7/8	22.22	1-3/16-12	18.28	1-1/4	31.75	1-1/4	31.75	1-3/8	34.92	25.90	21.84	33.02	16.76	43.18	50.54	40.38	-914
SLS-16-16U	1	25.40	1-5/16-12	22.35	1-3/8	34.92	1-1/2	38.10	1-1/2	38.10	31.24	26.41	38.35	16.76	50.54	53.59	43.94	-916
SLS-20-20U	1-1/4	31.75	1-5/8-12	27.68	1-11/16	42.76	1-7/8	47.63	1-7/8	47.63	41.14	38.86	45.72	16.76	67.81	58.16	54.86	-920
SLS-24-24U	1-1/2	38.10	1-7/8-12	34.03	2	50.80	2-1/4	57.15	2-1/8	53.98	50.03	45.21	50.80	16.76	77.97	60.45	62.23	-924
SLS-32-32U	2	50.80	2-1/2-12	45.97	2-3/4	69.85	3	76.20	2-3/4	69.85	67.56	62.73	69.85	16.76	107.18	71.62	80.26	-932

Positiopnable
45°SAE Male Elbow

SLBS

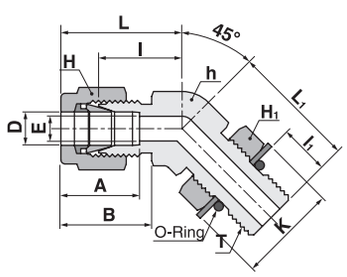

Connects fractional tube to SAE straight thread boss
These fittings may have a larger opening at the pipe / staight thread end.

Part No.	Tube O.D D		Straight Thread	E	Width across flat h		H		H_1		A	B	I	I_1	L	L_1	K	O-Ring Unifom Size No.
	in	mm	T	Min.	in	mm	in	mm	in	mm								
SLBS-4-4U	1/4	6.35	7/16-20	4.82	1/2	12.70	9/16	14.28	9/16	14.28	15.24	17.78	21.08	9.90	28.44	28.44	16.51	-904
SLBS-6-6U	3/8	9.52	9/16-18	7.11	5/8	15.87	11/16	17.46	11/16	17.46	16.76	19.30	24.63	11.17	32.00	32.25	20.06	-906
SLBS-8-8U	1/2	12.70	3/4-16	10.41	13/16	20.64	7/8	22.22	7/8	22.22	22.86	21.84	27.43	12.70	37.59	37.84	25.65	-908
SLBS-12-12U	3/4	19.05	1-1/16-12	15.74	1-1/16	26.98	1-1/8	28.58	1-1/4	31.75	24.38	21.84	31.24	16.76	41.40	48.76	36.57	-912
SLBS-16-16U	1	25.40	1-5/16-12	22.35	1-3/8	34.92	1-1/2	38.10	1-1/2	38.10	31.24	26.41	38.35	16.76	50.54	53.59	43.94	-916

Positiopnable
SAE Male Run Tee

STRS

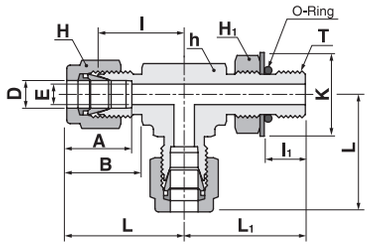

Connects fractional tube to SAE straight thread boss
These fittings may have a larger opening at the pipe / staight thread end.

Part No.	Tube O.D D		Straight Thread	E	Width across flat h		H		H_1		A	B	I	I_1	L	L_1	K	O-Ring Unifom Size No.
	in	mm	T	Min.	in	mm	in	mm	in	mm								
STRS-4-4U	1/4	6.35	7/16-20	4.82	1/2	12.70	9/16	14.28	9/16	14.28	15.24	17.78	21.08	9.90	28.44	28.44	16.51	-904
STRS-6-6U	3/8	9.52	9/16-18	7.11	5/8	15.87	11/16	17.46	11/16	17.46	16.76	19.30	24.63	11.17	32.00	32.25	20.06	-906
STRS-8-8U	1/2	12.70	3/4-16	10.41	13/16	20.64	7/8	22.22	7/8	22.22	22.86	21.84	27.43	12.70	37.59	37.84	25.65	-908
STRS-12-12U	3/4	19.05	1-1/16-12	15.74	1-1/16	26.98	1-1/8	28.58	1-1/4	31.75	24.38	21.84	31.24	16.76	41.40	48.76	36.57	-912
STRS-16-16U	1	25.40	1-5/16-12	22.35	1-3/8	34.92	1-1/2	38.10	1-1/2	38.10	31.24	26.41	38.35	16.76	50.54	53.59	43.94	-916
STRS-20-20U	1-1/4	31.75	1-5/8-12	27.68	1-11/16	42.76	1-7/8	47.63	1-7/8	47.63	41.14	38.86	45.72	16.76	67.81	58.16	54.86	-920
STRS-24-24U	1-1/2	38.10	1-7/8-12	34.03	2	50.80	2-1/4	57.15	2-1/8	53.98	50.03	45.21	50.80	16.76	77.97	60.45	62.23	-924
STRS-32-32U	2	50.80	2-1/2-12	45.97	2-3/4	69.85	3	76.20	2-3/4	69.85	67.56	62.73	69.85	16.76	107.18	71.62	80.26	-932

Positionable
SAE Male Branch Tee

STBS

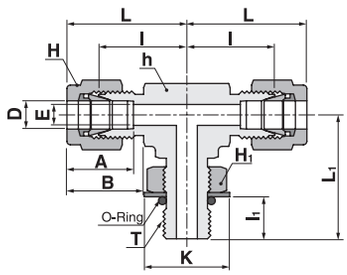

Connects fractional tube to SAE straight thread boss
These fittings may have a larger opening at the pipe / staight thread end.

Part No.	Tube O.D D		Straight Thread	E	Width across flat h		H		H_1		A	B	I	I_1	L	L_1	K	O-Ring Unifom Size No.
	in	mm	T	Min.	in	mm	in	mm	in	mm								
STBS-4-4U	1/4	6.35	7/16-20	4.82	1/2	12.70	9/16	14.28	9/16	14.28	15.24	17.78	21.08	9.90	28.44	28.44	16.51	-904
STBS-6-6U	3/8	9.52	9/16-18	7.11	5/8	15.87	11/16	17.46	11/16	17.46	16.76	19.30	24.63	11.17	32.00	32.25	20.06	-906
STBS-8-8U	1/2	12.70	3/4-16	10.41	13/16	20.64	7/8	22.22	7/8	22.22	22.86	21.84	27.43	12.70	37.59	37.84	25.65	-908
STBS-12-12U	3/4	19.05	1-1/16-12	15.74	1-1/16	26.98	1-1/8	28.58	1-1/4	31.75	24.38	21.84	31.24	16.76	41.40	48.76	36.57	-912
STBS-16-16U	1	25.40	1-5/16-12	22.35	1-3/8	34.92	1-1/2	38.10	1-1/2	38.10	31.24	26.41	38.35	16.76	50.54	53.59	43.94	-916
STBS-20-20U	1-1/4	31.75	1-5/8-12	27.68	1-11/16	42.76	1-7/8	47.63	1-7/8	47.63	41.14	38.86	45.72	16.76	67.81	58.16	54.86	-920
STBS-24-24U	1-1/2	38.10	1-7/8-12	34.03	2	50.80	2-1/4	57.15	2-1/8	53.98	50.03	45.21	50.80	16.76	77.97	60.45	62.23	-924
STBS-32-32U	2	50.80	2-1/2-12	45.97	2-3/4	69.85	3	76.20	2-3/4	69.85	67.56	62.73	69.85	16.76	107.18	71.62	80.26	-932

O-Seal Connector

S-LOK O-Ring seal fittings provide leak-tight sealing on both vacuum and high pressure with a smooth & flat surface perpendicular to the threaded port to ensure metal to metal contact.
The standard Buna N O-Ring is contained in a precision groove to prevent O-Ring extrusion at high pressure and for a controlled squeeze in a vacuum service.

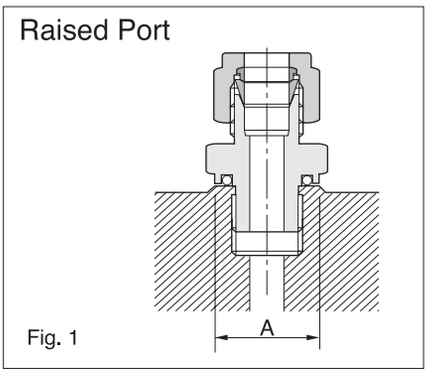

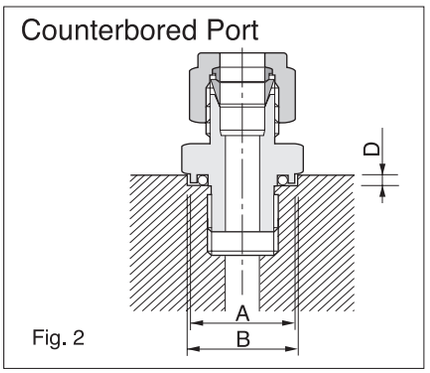

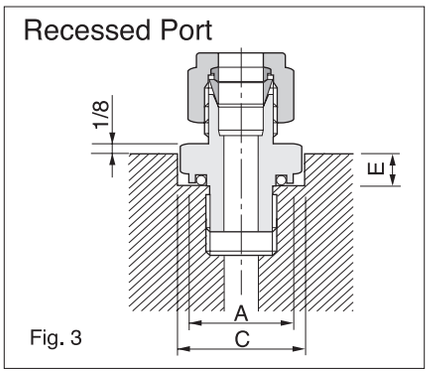

MountingDimensions for O-seal connectors

S-LOK Part No.	Straight Thread	Pipe Thread	Diameter A Min. in	Diameter A Min. mm	Diameter B Min. in	Diameter B Min. mm	Diameter C Min. in	Diameter C Min. mm	Depth D Max. in	Depth D Max. mm	Depth E Max. in	Depth E Max. mm
SCOS-2-2U	5/16-24	-	0.50	12.7	0.59	15.0	0.66	16.8	0.09	2.3	0.16	5.6
SCOS-3-3U	3/8-24	-	0.56	14.2	0.66	16.8	0.75	19.1	0.09	2.3	0.22	5.6
SCOS-4-4U	7/16-20	-	0.69	17.5	0.78	19.8	0.88	22.4	0.16	4.1	0.28	7.1
SCOS-5-5U	1/2-20	-	0.75	19.1	0.91	23.1	1.03	26.2	0.16	4.1	0.31	7.9
SCOS-6-6U	9/16-18	-	0.81	20.6	0.97	24.6	1.09	27.7	0.16	4.1	0.31	7.9
SCOS-8-8U	3/4-16	-	1.00	25.4	1.16	29.5	1.31	33.3	0.16	4.1	0.34	8.6
SCOS-12-12U	1-1/16-12	-	1.41	35.8	1.53	38.9	1.75	44.5	0.22	5.6	0.50	12.7
SCOS-16-16U	1-5/16-12	-	1.69	42.9	1.78	45.2	2.03	51.6	0.22	5.6	0.56	14.2
SCOP-2-2N	-	1/8	0.69	17.5	0.78	19.8	0.88	22.4	0.16	4.1	0.28	7.1
SCOP-4-2N	-	1/8	0.69	17.5	0.78	19.8	0.88	22.4	0.16	4.1	0.28	7.1
SCOP-4-4N	-	1/4	0.87	22.1	0.97	24.6	1.09	27.7	0.16	4.1	0.31	7.9
SCOP-6-6N	-	3/8	1.00	25.4	1.16	29.5	1.31	33.3	0.16	4.1	0.34	8.6
SCOP-6-8N	-	1/2	1.22	31.0	1.34	34.0	1.53	38.9	0.22	5.6	0.44	11.2
SCOP-8-8N	-	1/2	1.22	31.0	1.34	34.0	1.53	38.9	0.22	5.6	0.44	11.2

When installing an O-Ring seal fitting:

1. Hand-tighten it until the squeeze on the O-Ring can be felt during the last 1/4 turn
2. Snug the fitting lightly with a wrench

When connecting & disconnecting the tubing to the O-Ring fitting:

1. Use a back-up wrench on the fitting hex so it does not turn while the nut is being tightened at the tubing connection.
2. When disconnecting the tubing also use a back-up wrench so the fitting does not turn
3. For a recessed port, use a thin back-up wrench(1/8") to hold the fitting hex (Fig. 3).

O-Seal Straight
Thread Connector

SCOS

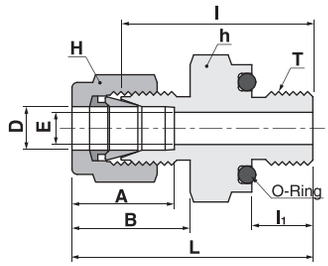

Connects fractional tube to straight thread
These fittings may have a larger opening at the pipe / staight thread end.

Part No.	Tube O.D D		Straight Thread	E	Width across flat h		H		A	B	I	l_1	L	O-Ring Unifom Size No.
	in	mm	T	Min.	in	mm	in	mm						
SCOS-2-2U	1/8	3.17	5/16-24	2.28	9/16	14.28	7/16	11.11	12.70	15.24	26.16	8.63	32.76	-011
SCOS-3-3U	3/16	4.76	3/8-24	3.04	5/8	15.87	1/2	12.70	13.71	16.00	27.68	9.65	34.29	-012
SCOS-4-4U	1/4	6.35	7/16-20	4.82	3/4	19.05	9/16	14.28	15.24	17.78	30.98	10.41	38.35	-111
SCOS-5-5U	5/16	7.93	1/2-20	6.35	7/8	22.22	5/8	15.87	16.25	18.54	33.27	11.17	40.64	-112
SCOS-6-6U	3/8	9.52	9/16-18	7.11	15/16	23.81	11/16	17.46	16.76	19.30	35.05	11.93	42.41	-113
SCOS-8-8U	1/2	12.70	3/4-16	10.41	1-1/8	28.57	7/8	22.22	22.86	21.84	35.81	11.93	45.97	-116
SCOS-12-12U	3/4	19.05	1-1/16-12	15.74	1-1/2	38.10	1-1/8	28.58	24.38	21.84	42.16	14.22	52.32	-215
SCOS-16-16U	1	25.40	1-5/16-12	22.35	1-3/4	44.45	1-1/2	38.10	31.24	26.41	45.97	14.22	58.16	-219

O-Seal Pipe
Thread Connector

SCOP

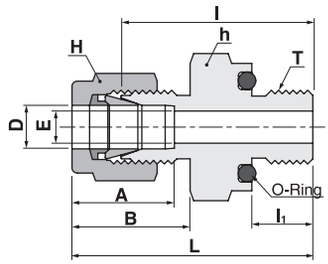

Connects fractional tube to NPT thread
These fittings may have a larger opening at the pipe / staight thread end.

Part No.	Tube O.D D		T	E	Width across flat h		H		A	B	I	l_1	L	O-Ring Unifom Size No.
	in	mm	*(NPT)	Min.	in	mm	in	mm						
SCOP-2-2N	1/8	3.17	1/8	2.28	3/4	19.05	7/16	11.11	12.70	15.24	26.16	7.11	32.76	-111
SCOP-4-2N	1/4	6.35	1/8	4.82	3/4	19.05	9/16	14.28	15.24	17.78	27.68	7.11	35.05	-111
SCOP-4-4N	1/4	6.35	1/4	4.82	15/16	23.81	9/16	14.28	15.24	17.78	30.98	9.65	38.35	-113
SCOP-6-4N	3/8	9.52	1/4	7.11	15/16	23.81	11/16	17.46	16.76	19.30	32.51	9.65	39.87	-113
SCOP-6-6N	3/8	9.52	3/8	7.11	1-1/8	28.58	11/16	17.46	16.76	19.30	34.03	10.41	41.40	-116
SCOP-6-8N	3/8	9.52	1/2	7.11	1-5/16	33.33	11/16	17.46	16.76	19.30	39.62	13.46	46.99	-212
SCOP-8-8N	1/2	12.70	1/2	10.41	1-5/16	33.33	7/8	22.22	22.86	21.84	39.62	13.46	49.78	-212

** ISO paralled threads ard available upon request.*

Male Pipe
Weld Connector

SCW

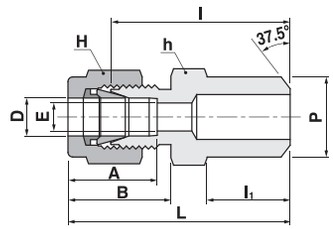

Connects fractional tube to pipe

Part No.	Tube O.D D		Male Pipe Size P		E	Width across flat h		Width across flat H		A	B	I	I_1	L
	in	mm	NPS	O.D	Min.	in	mm	in	mm					
SCW-2-2P	1/8	3.17	1/8	10.29	2.28	7/16	11.11	7/16	11.11	12.70	15.24	23.20	9.65	31.24
SCW-3-2P	3/16	4.76	1/8	10.29	3.04	7/16	11.11	1/2	12.70	13.71	16.00	24.63	9.65	31.24
SCW-4-2P	1/4	6.35	1/8	10.29	4.82	1/2	12.70	9/16	14.28	15.24	17.78	25.40	9.65	32.76
SCW-4-4P	1/4	6.35	1/4	13.72	4.82	9/16	14.28	9/16	14.28	15.24	17.78	30.48	14.22	37.84
SCW-5-2P	5/16	7.93	1/8	10.29	5.08	9/16	14.28	5/8	15.87	16.25	18.54	26.67	9.65	34.03
SCW-5-4P	5/16	7.93	1/4	13.72	6.35	9/16	14.28	5/8	15.87	16.25	18.54	31.24	14.22	38.60
SCW-6-4P	3/8	9.52	1/4	13.72	7.11	5/8	15.87	11/16	17.46	16.76	19.30	32.51	14.22	39.87
SCW-6-6P	3/8	9.52	3/8	17.15	7.11	11/16	17.46	11/16	17.46	16.76	19.30	32.51	14.22	39.87
SCW-6-8P	3/8	9.52	1/2	21.34	7.11	7/8	22.22	11/16	17.46	16.76	19.30	38.86	19.05	46.26
SCW-8-6P	1/2	12.70	3/8	17.15	10.41	13/16	20.64	7/8	22.22	22.86	21.84	33.27	14.22	43.43
SCW-8-8P	1/2	12.70	1/2	21.34	10.41	7/8	22.22	7/8	22.22	22.86	21.84	38.86	19.05	49.02
SCW-8-12P	1/2	12.70	3/4	26.67	10.41	1-1/16	26.98	7/8	22.22	22.86	21.84	40.38	19.05	50.54
SCW-10-8P	5/8	15.87	1/2	21.34	12.70	15/16	23.81	1	25.40	24.38	21.84	38.86	19.05	49.02
SCW-12-12P	3/4	19.05	3/4	26.67	15.74	1-1/16	26.98	1-1/8	28.58	24.38	21.84	40.38	19.05	50.54
SCW-16-16P	1	25.40	1	33.40	22.35	1-3/8	34.92	1-1/2	38.10	31.24	26.41	50.03	23.87	62.23
SCW-20-20P	1-1/4	31.75	1-1/4	42.16	27.68	1-3/4	44.45	1-7/8	47.63	41.14	38.86	55.11	23.87	77.21
SCW-24-24P	1-1/2	38.10	1-1/2	48.26	34.03	2-1/8	53.98	2-1/4	57.15	50.03	45.21	61.72	26.16	88.90
SCW-32-32P	2	50.80	2	60.33	45.97	2-3/4	69.85	3	76.20	67.56	62.73	76.20	26.92	113.53

Connects metric tube to pipe

Part No.	Tube O.D D	Male Pipe Size P		E	Width across flat		A	B	I	I	L
		NPS	O.D	Min.	h	H					
SCW-3M-2P	3	1/8	10.29	2.4	12	12	12.9	15.3	23.1	9.7	29.7
SCW-4M-2P	4	1/8	10.29	2.4	12	12	13.7	16.1	24.1	9.7	30.7
SCW-6M-2P	6	1/8	10.29	4.8	14	14	15.3	17.7	25.4	9.7	32.8
SCW-6M-4P	6	1/4	13.72	4.8	14	14	15.3	17.7	30.2	14.2	37.6
SCW-8M-2P	8	1/8	10.29	5.1	15	16	16.2	18.6	26.7	9.7	34.2
SCW-8M-4P	8	1/4	13.72	6.4	15	16	16.2	18.6	31.2	14.2	38.7
SCW-8M-8P	8	1/2	21.34	6.4	22	16	16.2	18.6	37.3	19.0	44.8
SCW-10M-4P	10	1/4	13.72	7.1	18	19	17.2	19.5	33.3	14.2	40.9
SCW-10M-6P	10	3/8	17.15	7.9	18	19	17.2	19.5	32.5	14.2	40.1
SCW-10M-8P	10	1/2	21.34	7.9	22	19	17.2	19.5	38.1	19.0	45.7
SCW-12M-4P	12	1/4	13.72	7.1	22	22	22.8	22.0	33.3	14.2	43.4
SCW-12M-6P	12	3/8	17.15	9.5	22	22	22.8	22.0	33.3	14.2	43.4
SCW-12M-8P	12	1/2	21.34	9.5	22	22	22.8	22.0	38.1	19.0	48.2
SCW-14M-6P	14	3/8	17.15	10.3	24	25	24.4	22.0	34.0	14.2	44.1
SCW-15M-8P	15	1/2	21.34	11.9	24	25	24.4	22.0	38.9	19.0	49.0
SCW-18M-8P	18	1/2	21.34	12.7	24	25	24.4	22.0	38.9	19.0	49.0
SCW-18M-8P	18	1/2	21.34	13.5	27	30	24.4	22.0	40.4	19.0	50.5
SCW-32M-20P	32	1-1/4	42.16	28.6	46	50	42.0	41.6	56.6	23.9	49.6
SCW-38M-24P	38	1-1/2	48.26	33.7	55	60	49.4	47.9	64.0	26.2	91.6

Male Pipe
Weld Elbow

SLW

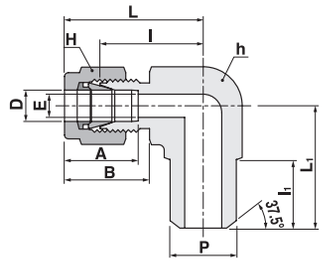

Connects fractional tube to pipe

Part No.	Tube O.D D		Male Pipe Size P		E	Width across flat h		H		A	B	I	I_1	L	L_1
	in	mm	NPS	O.D	Min.	in	mm	in	mm						
SLW-2-2P	1/8	3.17	1/8	10.29	2.28	1/2	12.70	7/16	11.11	12.70	15.24	19.55	9.65	26.92	18.79
SLW-4-4P	1/4	6.35	1/4	13.72	4.82	1/2	12.70	9/16	14.28	15.24	17.78	19.55	14.22	26.92	23.36
SLW-6-4P	3/8	9.52	1/4	13.72	7.11	5/8	15.87	11/16	17.46	16.76	19.30	23.11	14.22	30.48	25.40
SLW-8-8P	1/2	12.70	1/2	21.34	10.41	13/16	20.64	7/8	22.22	22.86	21.84	25.90	19.05	36.06	33.02
SLW-12-12P	3/4	19.05	3/4	26.67	15.74	1-1/16	26.98	1-1/8	28.58	24.38	21.84	29.71	19.05	39.87	36.83

Tube Socket
Weld Connector

SCSW

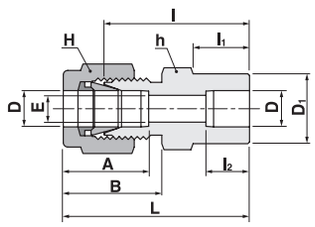

Connects fractional tubes

Part No.	Tube O.D D		E	D_1	Width across flat h		H		A	B	I	I_1	I_2	L
	in	mm	Min.		in	mm	in	mm						
SCSW-2-2	1/8	3.17	2.28	7.87	7/16	11.11	7/16	11.11	12.70	15.24	22.35	8.63	6.35	28.95
SCSW-4-4	1/4	6.35	4.82	11.17	1/2	12.70	9/16	14.28	15.24	17.78	26.16	10.41	7.87	33.52
SCSW-6-6	3/8	9.52	7.11	15.74	5/8	15.87	11/16	17.46	16.76	19.30	30.22	11.93	9.65	37.59
SCSW-8-8	1/2	12.70	10.41	19.05	13/16	20.64	7/8	22.22	22.86	21.84	30.98	11.93	12.70	41.14
SCSW-12-12	3/4	19.05	15.74	26.67	1-1/16	26.98	1-1/8	28.58	24.38	21.84	33.27	11.93	14.22	43.43
SCSW-16-16	1	25.40	22.35	33.27	1-3/8	34.92	1-1/2	38.10	31.24	26.41	40.38	14.22	19.05	52.57

Tube Socket
Weld Elbow

SLSW

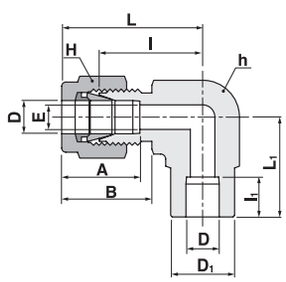

Connects fractional tubes

Part No.	Tube O.D D		E	D_1	Width across flat h		H		A	B	I	I_1	L	L_1
	in	mm	Min.		in	mm	in	mm						
SLSW-4-4	1/4	6.35	4.82	11.17	1/2	12.70	9/16	14.28	15.24	17.78	19.55	7.87	26.92	19.55
SLSW-6-6	3/8	9.52	7.11	15.74	5/8	15.87	11/16	17.46	16.76	19.30	23.11	9.65	30.48	23.11
SLSW-8-8	1/2	12.70	10.41	19.05	13/16	20.64	7/8	22.22	22.86	21.84	25.90	12.70	36.06	25.90
SLSW-12-12	3/4	19.05	15.74	26.67	1-1/16	26.98	1-1/8	28.58	24.38	21.84	29.71	14.22	39.87	29.71
SLSW-16-16	1	25.40	22.35	33.27	1-3/8	34.92	1-1/2	38.10	31.24	26.41	36.83	19.05	49.02	36.83

Welding
Bulkhead Union

SBUW

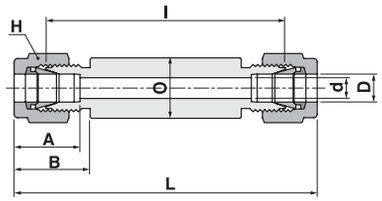

Connects fractional Tubes

Part No.	Tube O.D. D		d	H		A	B	I	L	O
	in	mm	mm	in	mm					
SBUW-1	1/16	1.59	1.27	5/16	7.93	8.63	10.92	64.2	71.85	10
SBUW-2	1/8	3.17	2.28	7/16	11.11	12.7	15.24	67.2	80.41	12
SBUW-3	3/16	4.76	3.04	1/2	12.70	13.71	16	69	82.2	12
SBUW-4	1/4	6.35	4.82	9/16	14.28	15.24	17.78	70.4	85.13	14
SBUW-5	5/16	7.93	6.35	5/8	15.87	16.25	18.54	73.7	88.43	16
SBUW-6	3/8	9.52	7.11	11/16	17.46	16.76	19.3	73.7	88.43	19
SBUW-8	1/2	12.7	10.41	7/8	22.22	22.86	21.84	73.7	94.02	22
SBUW-10	5/8	15.87	12.7	1	25.40	24.38	21.84	73.7	94.02	28
SBUW-12	3/4	19.05	15.74	1-1/8	28.58	24.38	21.84	73.7	94.02	32
SBUW-14	7/8	22.22	18.28	1-1/4	31.75	25.9	21.84	73.7	94.02	32
SBUW-16	1	25.4	22.35	1-1/2	38.10	31.24	26.41	78.5	102.89	35
SBUW-20	1-1/4	31.75	27.68	1-7/8	47.63	41.14	38.86	83.9	128.1	50
SBUW-24	1-1/2	38.1	34.03	2-1/4	57.15	50.03	45.21	86.1	140.45	55
SBUW-32	2	50.8	45.97	3	76.20	67.56	62.73	100.9	175.55	80

Connects Metric Tubes

Part No.	Tube O.D. D	d	H	A	B	I	L	O
		mm						
SBUW-2M	2	1.7	12	12.9	15.3	67.3	80.5	12
SBUW-3M	3	2.4	12	12.9	15.3	67.3	80.5	12
SBUW4M	4	2.4	12	13.7	16.1	69	82.2	12
SBUW-6M	6	4.8	14	15.3	17.7	70.4	85.2	14
SBUW-8M	8	6.4	16	16.2	18.6	74	89	16
SBUW-10M	10	7.9	19	17.2	19.5	74	89.2	19
SBUW-12M	12	9.5	22	22.8	22	74	94.2	22
SBUW-15M	15	11.9	25	24.4	22	74	94.2	25
SBUW-16M	16	12.7	25	24.4	22	74	94.2	28
SBUW-18M	18	15.1	30	24.4	22	74	94.2	28
SBUW-20M	20	15.9	32	26	22	74	94.2	32
SBUW-22M	22	18.3	32	26	22	74	94.2	32
SBUW-25M	25	21.8	38	31.3	26.5	78.6	103.2	38
SBUW-28M	28	21.8	46	36.6	36.6	81.7	116.3	45
SBUW-30M	30	26.2	50	39.6	39.2	74	117.2	50
SBUW-32M	32	28.6	50	42	41.6	87.1	133.1	50
SBUW-38M	38	33.7	60	49.4	47.9	90.9	146.1	60
SBUW-42M	42	36.5	65	49.4	47.9	90.9	146.1	60

Flange Adapter

SF

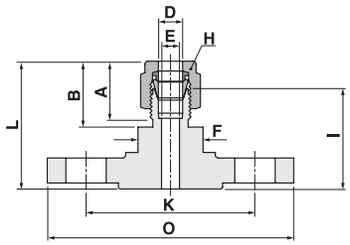

Connects fractional Tube to ANSI Flanges

Part No,	Tube O.D. D		ANSI Flange		E	H		A	B	F	L	I	K	O
	in	mm	NPS	Class	min	in	mm							
SF-8R-4T-150	1/4	6.35	1/2	150	4.82	9/16	14.28	15.24	17.78	20.64	40.89	33.53	60.3	90
SF-8R-6T-300	3/8	9.52	1/2	300	7.11	11/16	17.46	16.76	19.3	20.64	45.47	38.1	66.7	95
SF-8R-8T-150	1/2	12.7	1/2	150	10.41	7/8	22.22	22.86	21.84	20.64	45.21	35.05	60.3	90
SF-16R-8T-150	1/2	12.7	1	150	10.41	7/8	22.22	22.86	21.84	20.64	48.26	38.1	79.4	110
SF-32R-8T-150	1/2	12.7	2	150	10.41	7/8	22.22	22.86	21.84	20.64	53.09	42.93	120.7	150
SF-16R-12T-150	3/4	19.05	1	150	15.74	1-1/8	28.58	24.38	21.84	31.75	50.29	40.13	79.4	110
SF-16R-16T-150	1	25.4	1	150	22.35	1-1/2	38.1	31.24	26.41	34.93	60.45	48.26	79.4	110
SF-32R-24T-150	1-1/2	38.1	2	150	34.03	1-7/8	47.63	50.03	45.21	53.98	86.36	59.18	120.7	150
SF-32R-32T-150	2	50.8	2	150	45.97	3	76.2	67.56	62.73	69.85	101.39	67.06	120.7	150

Connects Metric Tube to DIN PN40 Flanges

Part No,	Tube O.D.	DIN Flange	E	H	A	B	F	L	I	K	O
	D	DN	min								
SF-25R-6M-PN40	6	25	4.8	14	15.3	17.7	20	47.5	40.1	85	115
SF-15R-12M-PN40	12	15	9.5	22	22.8	22	20	48.5	38.4	65	95
SF-25R-12M-PN40	12	25	9.5	22	22.8	22	20	50.5	40.4	85	115
SF-50R-12M-PN40	12	50	9.5	22	22.8	22	20	55.3	45.2	125	165
SF-15R-18M-PN40	18	15	15.1	30	24.4	22	32	51.8	41.7	65	95
SF-25R-18M-PN40	18	25	15.1	30	24.4	22	32	53.8	43.7	85	115
SF-25R-25M-PN40	25	25	21.8	38	31.3	26.5	35	64	51.8	85	115
SF-50R-38M-PN40	38	50	33.7	60	49.4	47.9	55	90.4	62.7	125	165

Connects fractional Tube to JIS10K Flanges

Part No,	Tube O.D. D		JIS Flange	E	H		A	B	F	L	I	K	O
	in	mm	DN	min	in	mm							
SF-15R-4T-10K	1/4	6.35	15	4.82	9/16	14.28	15.24	17.78	20.64	42.16	34.8	70	95
SF-15R-6T-10K	3/8	9.52	15	7.11	11/16	17.46	16.76	19.3	20.64	43.69	36.32	70	95
SF-15R-8T-10K	1/2	12.7	15	10.41	7/8	22.22	22.86	21.84	20.64	46.49	36.32	70	95
SF-15R-12T-10K	3/4	19.05	15	15.74	1-1/8	28.58	24.38	21.84	31.75	48.51	38.35	70	95
SF-25R-16T-10K	1	25.4	25	22.35	1-1/2	38.1	31.24	26.41	34.93	60.96	48.77	90	125
SF-50R-32T-10K	2	50.8	50	45.97	3	76.2	67.56	62.73	69.85	101.85	64.52	120	155

Connects Metric Tube to JIS10K Flanges

Part No,	Tube O.D.	JIS Flange	E	H	A	B	F	L	I	K	O
	D	DN	min								
SF-15R-12M-10K	12	15	9.5	22	22.8	22	20	46.5	36.3	70	95
SF-15R-18M-10K	18	15	15.1	30	24.4	22	32	48.5	38.4	70	95
SF-25R-25M-10K	25	25	21.8	38	31.3	26.5	35	61.0	48.8	90	125

Plug

SP

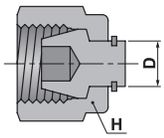

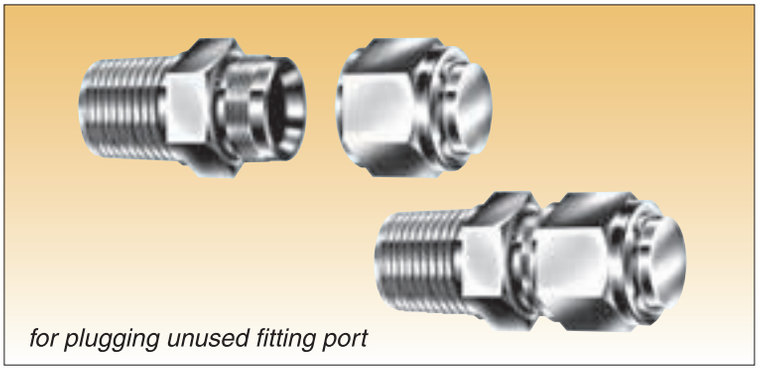

Installation Instructions

1. Remove the nut and ferrules from the body
2. With a wrench, 1/4 turn from the finger-tight position, (1/8 turn for 1/8", 3/16" and 2mm, 3mm and 4mm)

fractional

Part No.	Tube O.D. D		Width across flat H	
	in	mm	in	mm
SP-1	1/16	1.59	5/16	7.93
SP-2	1/8	3.17	7/16	11.11
SP-3	3/16	4.76	1/2	12.70
SP-4	1/4	6.35	9/16	14.28
SP-5	5/16	7.93	5/8	15.87
SP-6	3/8	9.52	11/16	17.46
SP-8	1/2	12.70	7/8	22.22
SP-10	5/8	15.87	1	25.40
SP-12	3/4	19.05	1-1/8	28.58
SP-14	7/8	22.22	1-1/4	31.75
SP-16	1	25.40	1-1/2	38.10
SP-20	1-1/4	31.75	1-7/8	47.63
SP-24	1-1/2	38.10	2-1/4	57.15
SP-32	2	50.80	3	76.20

metric

Part No.	Tube O.D. D	Width across flat H
SP-2M	2	12
SP-3M	3	12
SP-4M	4	12
SP-6M	6	14
SP-8M	8	16
SP-10M	10	19
SP-12M	12	22
SP-15M	15	25
SP-16M	16	25
SP-18M	18	30
SP-20M	20	32
SP-22M	22	32
SP-25M	25	38
SP-28M	28	46
SP-32M	32	50
SP-38M	38	60

Cap

SC

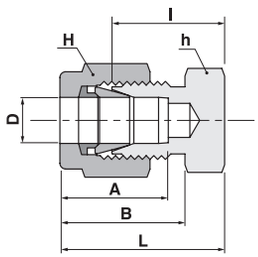

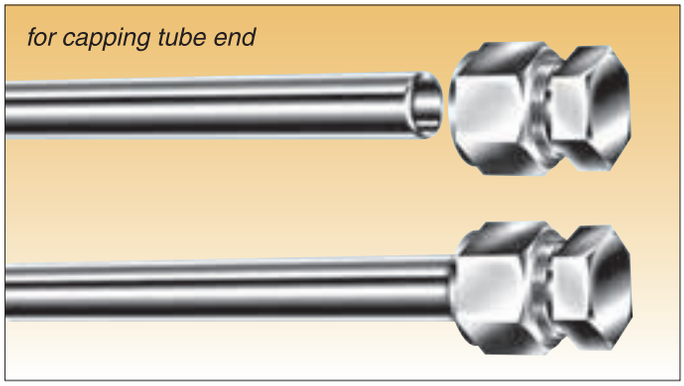

Installation Instructions

1. Insert the tube end into the Cap
2. With a wrench, 1-1/4 turns from the finger-tight position, (3/4 turn for 1/8", 3/16" 3mm and 4mm)

Cap end of fractional tube

Part No.	Tube O.D. D		Width across flat h		Width across flat H		A	B	I	L
	in	mm	in	mm	in	mm				
SC-1	1/16	1.59	5/16	7.93	5/16	7.93	8.63	10.92	11.20	14.18
SC-2	1/8	3.17	7/16	11.11	7/16	11.11	12.70	15.24	13.46	20.06
SC-3	3/16	4.76	7/16	11.11	1/2	12.70	13.71	16.00	14.73	21.33
SC-4	1/4	6.35	1/2	12.70	9/16	14.28	15.24	17.78	16.00	23.26
SC-5	5/16	7.93	9/16	14.28	5/8	15.87	16.25	18.54	17.01	24.38
SC-6	3/8	9.52	5/8	15.87	11/16	17.46	16.76	19.30	18.28	25.65
SC-8	1/2	12.70	13/16	20.63	7/8	22.22	22.86	21.84	19.05	29.21
SC-10	5/8	15.87	15/16	23.81	1	25.40	24.38	21.84	19.81	29.97
SC-12	3/4	19.05	1-1/16	26.98	1-1/8	28.57	24.38	21.84	21.33	31.49
SC-14	7/8	22.22	1-3/16	30.16	1-1/4	31.75	25.90	21.84	23.87	34.03
SC-16	1	25.40	1-3/8	34.92	1-1/2	38.10	31.24	26.41	26.16	38.35
SC-20	1-1/4	31.75	1-3/4	44.45	1-7/8	47.63	41.14	38.86	31.24	53.34
SC-24	1-1/2	38.10	2-1/8	53.98	2-1/4	57.15	50.15	45.21	37.33	64.51
SC-32	2	50.80	2-3/4	69.85	3	76.20	67.56	62.73	49.27	86.61

Cap end of metric tube

Part No.	Tube O.D. D	Width across flat h	Width across flat H	A	B	I	L
SC-2M	2	12	12	12.9	15.3	13.5	20.1
SC-3M	3	12	12	12.9	15.3	13.5	20.1
SC-4M	4	12	12	13.7	16.1	14.7	21.3
SC-6M	6	14	14	15.3	17.7	15.7	23.1
SC-8M	8	15	16	16.2	18.6	17.0	24.5
SC-10M	10	18	19	17.2	19.5	19.0	26.6
SC-12M	12	22	22	22.8	22.0	19.0	29.1
SC-15M	15	24	25	24.4	22.0	19.8	29.9
SC-16M	16	24	25	24.4	22.0	19.8	29.9
SC-18M	18	27	30	24.4	22.0	21.3	31.4
SC-20M	20	30	32	26.0	22.0	23.9	34.0
SC-22M	22	30	32	26.0	22.0	23.9	34.0
SC-25M	25	35	38	31.3	26.5	26.2	38.5
SC-28M	28	41	46	36.6	36.6	27.7	48.5
SC-32M	32	46	50	42.0	41.6	32.8	55.8
SC-38M	38	55	60	49.4	47.9	37.8	65.4

Tube Insert

SI

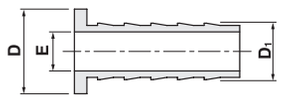

for Nylon or Soft Plastic Tubing

Installation Instructions

The S-LOK Tube Insert supports the soft plastic tubing, thus the tubing does not collapse when the ferrules deform it.
When you select a size of Tube Insert, check if the tubing O.D and I.D conform to those of the tube insert.

fractional

Part No.	Tube O.D. D		Tube I.D. D_1		E
	in	mm	in	mm	
SI-3-2	3/16	4.76	1/8	3.17	2.28
SI-4-2	1/4	6.35	1/8	3.17	2.28
SI-4-3	1/4	6.35	3/16	4.76	3.55
SI-5-2	5/16	7.93	1/8	3.17	2.28
SI-5-3	5/16	7.93	3/16	4.76	3.04
SI-5-4	5/16	7.93	1/4	6.35	4.82
SI-6-3	3/8	9.52	3/16	4.76	3.04
SI-6-4	3/8	9.52	1/4	6.35	4.82
SI-8-4	1/2	12.70	1/4	6.35	4.82
SI-8-6	1/2	12.70	3/8	9.52	7.87
SI-10-6	5/8	15.87	3/8	9.52	7.87
SI-10-8	5/8	15.87	1/2	12.70	11.17
SI-12-8	3/4	19.05	1/2	12.70	11.17
SI-12-10	3/4	19.05	5/8	15.87	14.22
SI-16-12	1	25.40	3/4	19.05	17.52

metric

Part No.	Tube O.D. D	Tube I.D. D_1	E
SI-6M-4M	6	4	2.8
SI-8M-6M	8	6	4.4
SI-10M-8M	10	8	6.4
SI-12M-8M	12	8	6.4
SI-12M-10M	12	10	8.3

Nut

SN

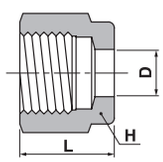

fractional

Part No.	Tube O.D. D		Width across flat H		L
	in	mm	in	mm	
SN-1	1/16	1.59	5/16	7.93	7.90
SN-2	1/8	3.17	7/16	11.11	11.93
SN-3	3/16	4.76	1/2	12.70	11.93
SN-4	1/4	6.35	9/16	14.28	12.70
SN-5	5/16	7.93	5/8	15.87	13.46
SN-6	3/8	9.52	11/16	17.46	14.22
SN-8	1/2	12.70	7/8	22.22	17.52
SN-10	5/8	15.87	1	25.40	17.52
SN-12	3/4	19.05	1-1/8	28.58	17.52
SN-14	7/8	22.22	1-1/4	31.75	17.52
SN-16	1	25.40	1-1/2	38.10	20.57
SN-20	1-1/4	31.75	1-7/8	47.63	31.75
SN-24	1-1/2	38.10	2-1/4	57.15	38.10
SN-32	2	50.80	3	76.20	52.32

metric

Part No.	Tube O.D. D	Width across flat H	L
SN-2M	2	12	11.8
SN-3M	3	12	11.8
SN-4M	4	12	12.0
SN-6M	6	14	12.7
SN-8M	8	16	13.5
SN-10M	10	19	13.1
SN-12M	12	22	17.5
SN-15M	15	25	17.5
SN-16M	16	25	17.4
SN-18M	18	30	17.5
SN-20M	20	32	17.5
SN-22M	22	32	17.5
SN-25M	25	38	20.6
SN-28M	28	46	30.6
SN-32M	32	50	34.4
SN-38M	38	60	40.6

Front Ferrule

SFF

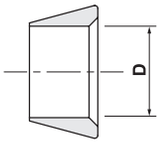

fractional

Part No.	Tube O.D. D	
	in	mm
SFF-1	1/16	1.59
SFF-2	1/8	3.17
SFF-3	3/16	4.76
SFF-4	1/4	6.35
SFF-5	5/16	7.93
SFF-6	3/8	9.52
SFF-8	1/2	12.70
SFF-10	5/8	15.87
SFF-12	3/4	19.05
SFF-14	7/8	22.22
SFF-16	1	25.40
SFF-20	1-1/4	31.75
SFF-24	1-1/2	38.10
SFF-32	2	50.80

metric

Part No.	Tube O.D. D
SFF-2M	2
SFF-3M	3
SFF-4M	4
SFF-6M	6
SFF-8M	8
SFF-10M	10
SFF-12M	12
SFF-15M	15
SFF-16M	16
SFF-18M	18
SFF-20M	20
SFF-22M	22
SFF-25M	25
SFF-28M	28
SFF-32M	32
SFF-38M	38

Back Ferrule

SFB

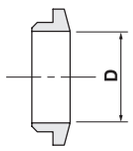

fractional

Part No.	Tube O.D. D	
	in	mm
SFB-1	1/16	1.59
SFB-2	1/8	3.17
SFB-3	3/16	4.76
SFB-4	1/4	6.35
SFB-5	5/16	7.93
SFB-6	3/8	9.52
SFB-8	1/2	12.70
SFB-10	5/8	15.87
SFB-12	3/4	19.05
SFB-14	7/8	22.22
SFB-16	1	25.40
SFB-20	1-1/4	31.75
SFB-24	1-1/2	38.10
SFB-32	2	50.80

metric

Part No.	Tube O.D. D
SFB-2M	2
SFB-3M	3
SFB-4M	4
SFB-6M	6
SFB-8M	8
SFB-10M	10
SFB-12M	12
SFB-15M	15
SFB-16M	16
SFB-18M	18
SFB-20M	20
SFB-22M	22
SFB-25M	25
SFB-28M	28
SFB-32M	32
SFB-38M	38

Ferrule Set

SFS10

fractional

Part No.	Tube O.D.	
	in	mm
SFS10-1	1/16	1.59
SFS10-2	1/8	3.17
SFS10-3	3/16	4.76
SFS10-4	1/4	6.35
SFS10-5	5/16	7.93
SFS10-6	3/8	9.52
SFS10-8	1/2	12.70
SFS10-10	5/8	15.87
SFS10-12	3/4	19.05
SFS10-14	7/8	22.22
SFS10-16	1	25.40

metric

Part No.	Tube O.D.
SFS10-2M	2
SFS10-3M	3
SFS10-4M	4
SFS10-6M	6
SFS10-8M	8
SFS10-10M	10
SFS10-12M	12
SFS10-15M	15
SFS10-16M	16
SFS10-18M	18
SFS10-20M	20
SFS10-22M	22
SFS10-25M	25

Bulkhead Retainer

SBR

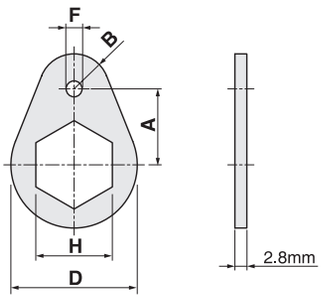

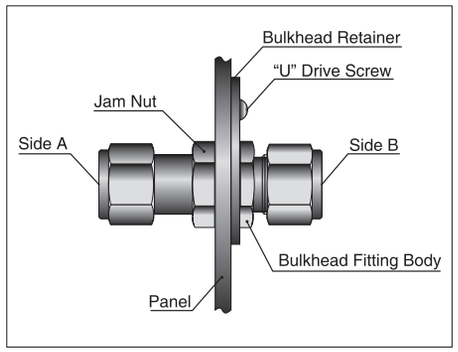

Connects fractional Tube

Part No,	S-LOK Fitting Size		A	B	D	H	F	Drill Hole Dia.	"U" Drive Screw	Drill No.
	In	mm								
SBR-1	1/16	-	9.52	3.97	15.9	7.93	3.97	3.05	6-3/8	31
SBR-2	1/8	-	12.7	5.56	20.6	12.7	3.97	3.05	6-3/8	31
SBR-3	3/16	3, 4	14.28	6.35	23.8	14.28	3.97	3.05	6-3/8	31
SBR-4	1/4	6	15.87	7.14	25.4	15.87	3.97	3.05	6-3/8	31
SBR-5	5/16	-	17.46	7.93	28.6	17.46	3.97	3.05	6-3/8	31
SBR-8M	-	8	17.46	7.93	28.6	18.0	3.97	3.05	6-3/8	31
SBR-6	3/8	-	19.05	8.73	31.8	19.05	3.97	3.05	6-3/8	31
SBR-10M	-	10	23.81	10.32	38.1	22.0	5.56	3.66	10-1/2	27
SBR-8	1/2	12	23.81	10.32	38.1	23.81	5.56	3.66	10-1/2	27
SBR-10	5/8	15, 16	25.4	10.32	41.2	26.98	5.56	3.66	10-1/2	27
SBR-12	3/4	18	26.98	11.91	46.0	30.16	5.56	3.66	10-1/2	27
SBR-14	7/8	-	30.2	13.49	52.4	34.93	5.56	3.66	10-1/2	27
SBR-16	1	-	32.54	13.49	58.7	41.27	5.56	3.66	10-1/2	27

Dielectric Fitting

SEU

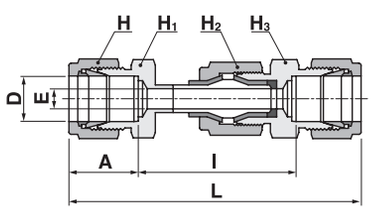

Connects fractional Tube or Pipe

Part No,	Tube O.D. D		Pipe Thread NPT	E	A	L	ℓ	H		H_1		H_2		H_3	
	in	mm		min				in	mm	in	mm	in	mm	in	mm
SEU-4	1/4	6.35	-	4.8	15.24	95.8	65.3	9/16	14.28	1/2	12.7	7/8	22.22	13/16	30.16
SEU-6	3/8	9.52	-	7.1	16.76	99.7	65.9	11/16	17.46	5/8	15.87	7/8	22.22	13/16	30.16
SEU-6-4N	3/8	9.52	1/4	7.1	16.76	94.5	-	11/16	17.46	5/8	15.87	7/8	22.22	13/16	30.16
SEU-8	1/2	12.7	-	7.1	22.86	106	60.3	7/8	22.22	13/16	20.64	7/8	22.22	13/16	30.16
SEU-10M	-	10	-	7.1	17.2	101.5	67.3	-	19	-	18	-	22	-	22
SEU-12M	-	12	-	7.1	22.8	106.3	60.4	-	22	-	22	-	22	-	22

Technical Data & Dimensions

- Electronical resistance of insulators at 70°F (20°C): 10 x 10^6 at 10V (dc)
- Pressure Rating : 5,000psig (344 barg)
- Temperature Rating : –40 to 200°F (–40 to 93°C)

Hydraulic Swaging Unit SWG-MNL

S-LOK Hydraulic Swaging Units preswage the ferrules to the tubing before assembly.

Features

- Reduce assembly and installation time.
- Does not cause deformation on the sealing surface of the fitting body and the fitting body thread.
- Supplied in a portable rugged plastic bag.

Part No.	Case Dimensions (L x W x D)	
	in.	cm
SWG-SMNL	19.78 x 15.77 x 7.41	50.2 x 40.1 x 18.8
SWG-LMNL	24.84 x 19.68 x 11.89	63.1 x 50 x 30.2

- Available Size - Fractional Tubing : 1/2 ~ 2 in.
  - Metric Tubing: 12 ~ 38 mm
- Can be preswage all available sizes by replacing the jig and die.

Unit Assembly and Set up

1. Open the vent valve of the hand pump by turning it counterclockwise.
2. Connect the hose to the hand pump and swaging head.
3. Turn the jig and die you want to use on the swaging head clockwise to fasten.
4. Tighten the die to the swaging head with Y wrench.
5. Tighten the bolt tightly with L wrench to fix the jig and complete the assembly.

Swaging Unit Operating

1. Align the front ferrule, back ferrule, nut and tubing of the size you want to swage, and fasten them to the jig and die.
2. Turn the vent valve of the hand pump clockwise to close it.
3. Pump the handle of the hand pump up and down.
4. Pump the hook on the back of the swaging head until it facing downward.
5. Open the vent valve of the hand pump by turning it counterclockwise while keeping the hook downward.
6. Disassemble preswaged ferrule, nut, tubing from jig and die.

Assembly with Fitting Body

1. Insert the pre-swaged ferrule, nut and tubing into the fitting body.
2. Tighten the nut clockwise by hand.
3. Fix the fitting body with a vise or spanner.
4. Tighten the nut 1/4 turn clockwise with spanner.

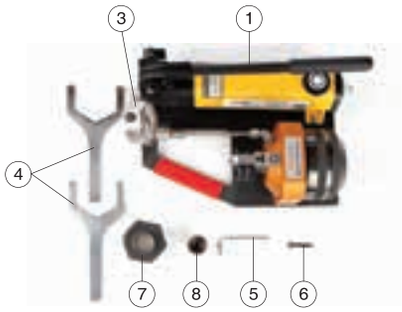

Swaging Unit - SWG-MNL Component

No.	Part Name
1	Hand Pump
2	Swaging Head
3	Pressure Gauge
4	Y Wrench
5	L Wrench
6	Bolt
7	Jig
8	Die

Recommended Minimum Wall Thickness of Tubing

Size	Tubing Wall Thickness	
	Stainless Steel	SWG-JD Part No.
1/2″	0.065	SWG-JD8-S630
5/8″	0.065	SWG-JD10-S630
3/4″	0.065	SWG-JD12-S630
7/8″	0.065	SWG-JD14-S630
1″	0.083	SWG-JD16-S630
1-1/4″	0.095	SWG-JD20-S630
1-1/2″	0.095	SWG-JD24-S630
2″	0.109	SWG-JD32-S630
12mm	1.5	SWG-JD12M-S630
15mm	1.5	SWG-JD15M-S630
16mm	1.8	SWG-JD16M-S630
18mm	1.8	SWG-JD18M-S630
20mm	2.0	SWG-JD20M-S630
22mm	2.0	SWG-JD22M-S630
25mm	2.0	SWG-JD25M-S630
28mm	2.2	SWG-JD28M-S630
32mm	2.2	SWG-JD32M-S630
38mm	2.5	SWG-JD38M-S630

Air-Actuated Hydraulic Swaging Unit – SWG-PAT

Features

- Easily preswage S-LOK nut, ferrule to stainless steel tubing
- Pneumatic drive & improve process control
- An electronically controlled semi-automatic device starts and stops the preswaging process.
- Automatically starts when tubing is inserted and bottomed
- Available size – Metric Tubing : 6, 8, 10, 12mm
  – Fractional Tubing : 1/4, 3/8, 1/2 inch
- Easily replace jigs and dies for available tubing sizes

Electric Swaging Unit – SWG-AT

S-LOK Electric Swaging Units pre-assemble the sleeve of bite type fitting to the tubing before installation.

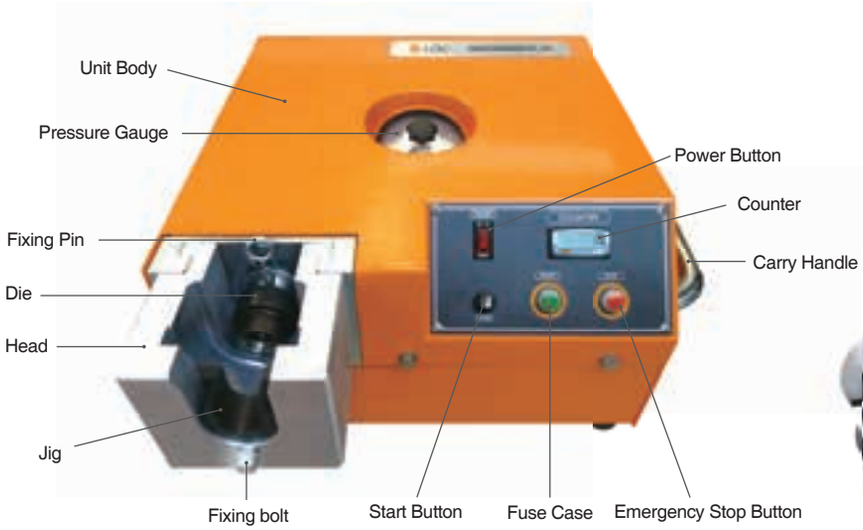

Features

- Reduce assembly and installation time.
- Does not cause deformation on the sealing surface of the fitting body and the fitting body thread.
- Easy replacement of jig and die.
- Can be assembly all available sizes by replacing the jig and die.
- Available size – Metric Tubing : 12 ~ 42 mm
  – Fractional Tubing : 1/2 ~ 2 in.
- 220V version is standard and 110V version is available upon request.

Hydraulic pump	0.35 kW • 2.0 L/min
Operating pressure	0 ~ 600 bar
Connection	220V • 1Ø • 50 / 60Hz • 2.5A
Dimension	400 x 410 x 230 mm
Weight	44 kg

Tubing preparation

- Make sure that the outer diameter, wall thickness, circularity and tolerance of the tubing are appropriate for your application.
- Make sure the surface is free of scratches.
- Tubing should be cut to length with a square cut.
- Deburr the inside and outside edge of the tubing.

Unit Set Up

- Install the head on the swaging unit.
- Insert the die of the size you want to use into the swaging unit and fix it with the fixing pin.
- Install the jig of the size you want to use on the head and fix it with the fixing bolt.

Unit Set Up

- Turn on the unit.
- Set up the swaging pressure.
- Align the sleeve, nut on tubing of size you want to pre-assemble,
  and insert the tubing to the die.
  (The sleeve and nut are positioned between the die and the jig, Aligned with the tubing.)
- Press the start button and the die will slide toward the jig to complete pre-assemble.
  In case of emergency, press the red stop button. the unit stops immediately.
- Remove pre-assembled tubing from the unit.

Assembly on Fitting Body

- Insert the pre-assembled sleeve, nut and tubing into the fitting body.
- Tighten the nut clockwise by hand.
- Fix the fitting body with a vise or spanner.
- Tighten the nut 1/4 ~ 1/3 turn clockwise with spanner.

Gap Gauge for Pull-up Inspection

SIG

S-LOK maintains unbelievably tight tolerance on its each and every part.
S-LOK tube fittings are monitored and gauged throughout process.
This assures S-LOK consistency and makes S-LOK fittings gaugable.
This no-go gauge is the useful tool to inspect if the fittings are pulled up 1-1/4 turns from the finger-tight position. When the gauge doesn't fit the gap between the nut and body hex, the fitting is tightened 1-1/4 turns from the finger-tight position.
If the gauge fits the gap, the fittings is not fully tightened.

Multiple Size Gap Gauge

Part No.	Applicable S-LOK Tube O.D.
SIG-468	1/4", 3/8", 1/2", 6mm, 10mm, 12mm

Liquid Gas Leak Detectors

S·detec

- S·detec liquid gas leak detectors detect gas leaks in hard-to-reach areas.
- Flexible tube extends for hard-to-reach areas.
- Detects even on very small leaks and vertical surfaces.
- Easy to use, non-toxic, non-corrisive, non-fammable and free of chlorine.
- S·detec liquid evaporates cleanly after testing.
- Composition : Distilled water, glycerine and others
- Temperature range : -2˚C to 93˚C (28˚F to 200˚F)

⚠ Use S-detec liquid gas leak detectors only on external surfaces.

Instructions

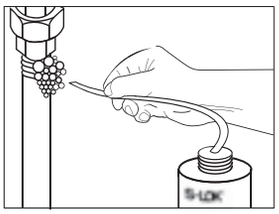

M-SLD-02
Hold S-detec tube end at a pressurized connection.
Squeeze upright bottle to apply a stream of S-detec liquid leak detector. Seek for bubbles which indicates leakage.

Product Comparison

Ordering Information

Ordering Number	Container Size	Flexible Tube Length
M-SLD-01	3.8 L (1 gal)	-
M-SLD-02	240 mL (8 oz)	30 cm (12 inch)

S·detec	Detergent
Non-corrosive	Corrosion
Dry clean without stains.	Stains and clots are formed.

Bite Type Tube Fittings (DIN 2353)

The best partner for value creation
We support the innovations of customer

02

Catalogue No. S-LOK Mar.2024

Bite Type Tube Fittings - DIN2353

Features

- HANSUN bite type fitting are designed in accordance with DIN 2353.
- The HANSUN bite type fitting is consists of a body, a progressive ring(sleeve) and a nut.
- The HANSUN bite type tube fittings are designed and manufacture to produced a strong, reliable, leak-free joint upon proper assembly.

Standard Material Specifications

- Steel Fittings : Materials see DIN3859.
- Stainless Steel Fitting : X5CrNiMo 17122 in accordance with DIN17440, material No. 1.4401. or ASTM A276 / A479 type 316
- Brass Fitting : CuZn35Ni2 in accordance with DIN17660/ 17672, material No. 2.0540.
- Elastomer Seal : NBR(BUNA-N), DIN 17660FPM(VITON).

Technical Information

Pressure and temperature load Capability

- Pressure Ranges

Series		Max. Pressure		
		Steel	Stainless Steel	Brass
LL	4 ~ 12	100 bar	100 bar	63 bar
L	6 ~ 10	500 bar	315 bar	200 bar
	12 ~ 18	400 bar		
	22 ~ 42	250 bar	160 bar	100 bar
S	6 ~10	800 bar	630 bar	400 bar
	12 ~ 14(16*)	630 bar		
	16 ~ 30	420 bar	400 bar	250 bar
	38		315 bar	200 bar

*16S Steel Only.

Pressure reduction with temperature

The following reduction of pressure compared with the catalogue specification for higher temperatures.

Materials of fittings	Temperature range	Reduction of pressure
Steel	-40°C up to 120°C	-
Brass	-60°C up to 175°C	35%
316 Stainless Steel (1.4401)	-60°C up to 20°C	-
	50°C	4%
	100°C	11%
	200°C	20%
	300°C	29%
	400°C	33%

For different material of tubes and fittings, the tubes must be tested separately concerning the allowed temperature range and the necessary reduction of pressure.

Allowable working temperatures

A) For fittings materials

Material	Temperature
Steel	-40°C up to 120°C (DIN 3859)
Brass	-60°C up to 175°C
316 Stainless Steel	-60°C up to 400°C (DIN 17440)

Please refer to the information given in the section "Reduction of Pressure"

A) For seal materials

Material	Temperature
NBR (e.g. PERBUNAN®)	-35°C up to 100°C
FPM (e.g. VITON®)	-28°C up to 204°C
PTFE (e.g. TEFLON®)	-60°C up to 240°C

Caution! If different fitting and sealing material are used, the lowest temperature as indicated for each material is applicable!

Stud Ends & Tapped Hole Forms for tube Fittings

This standard specifies dimensions for stud ends and tapped holes with metric fine pitch thread and pipe thread for use with compression fittings, valves and screw plugs, general outlay of types.

Forms of Stud Ends
Form A (DIN 3852 Part 1+2) with sealing by washer

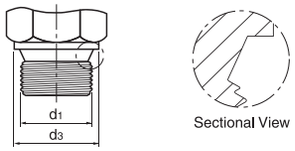

Form B (DIN 3852 Part 1+2)
with sealing by compression against face of body

Form C (DIN 3852 Part 1+2)
with sealing in tapered thread

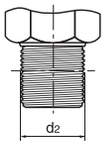

Metric (keg) DIN 158
BSP (keg) DIN 2999
NPT (keg) ASME B 1.20.1

Form E (DIN 3852 Part 1)
with sealing by DIN 3869 ring seals (*ED-Ring)

Form F (DIN 3852 Part 3)
with sealing by (*O-Ring)

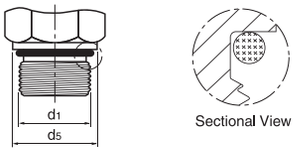

Thread size for		d_3	d_4 $^{0}_{-0.2}$	d_5
From A, B and E, F stub ends	From C stud ends			
d_1	d_2			
M8X1.0	M8X1.0keg.	-	-	10.9
M10X1.0	M10X1.0keg.	14	13.9	12.9
M12X1.5	M12X1.5keg.	17	16.9	16.9
M14X1.5	M14X1.5keg.	19	18.9	18.9
M16X1.5	M16X1.5keg.	21	21.9	20.9
M18X1.5	M18X1.5keg.	23	23.9	22.9
M20X1.5	M20X1.5keg.	25	25.9	24.9
M22X1.5	M22X1.5keg.	27	26.9	26.9
M26X1.5	-	31	31.9	30.9
M27X2.0	-	32	31.9	31.9
M33X2.0	-	39	39.9	37.9
M42X2.0	-	49	49.9	49.8
M48X2.0	-	55	54.9	54.9
G1/8	1/8 NPT	14	13.9	-
G1/4	1/4 NPT	18	18.9	-
G3/8	3/8 NPT	22	21.9	-
G1/2	1/2 NPT	26	26.9	-
G3/4	3/4 NPT	32	31.9	-
G1	1 NPT	39	39.9	-
G1-1/4	1-1/4 NPT	49	49.9	-
G1-1/2	1-1/2 NPT	55	54.9	-
7/16-20UNF	R1/8 keg.	-	-	14.4
9/16-18UNF	R1/4 keg.	-	-	17.6
3/4-16UNF	R3/8 keg.	-	-	22.3
7/8-14UNF	R1/2 keg.	-	-	25.5
1-1/16-12UN	R3/4 keg.	-	-	31.9
1-5/16-12UN	R1 keg.	-	-	38.2
1-5/8-12UN	R1-1/4 keg.	-	-	47.7
-	R1-1/2 keg.	-	-	-

Forms of Tapped Holes

Form X (DIN 3852 Part 1+2)
for parallel Stud Ends. (Form A,B)
*d_7 is for Stud Ends Form E

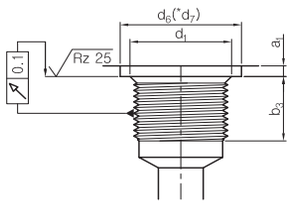

Form Y (DIN 3852 Part 3)
for Stud Ends with O-Ring. (Form F)

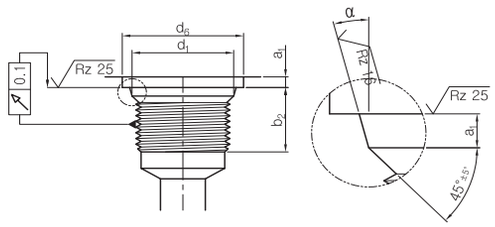

Form Z (DIN 3852 Part 1+2)
for tapered thread Stud Ends.

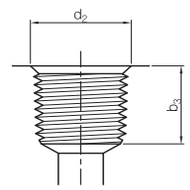

Thread size for		d_6 Min.	d_7	a_1 Max	a_2 $^{+0.4}_{0}$	b_1 Min.	b_2 Min	b_3 Min	α°±1.0°
From X, Y Tapped Holes	From Z Tapped Holes								
d_1	d_2								
M8X1.0	M8X1.0keg.	13	-	1.0	1.6	-	10.0	5.5	12
M10X1.0	M10X1.0keg.	15	15	1.0	1.6	8	10.0	5.5	12
M12X1.5	M12X1.5keg.	18	18	1.5	2.4	12	11.5	8.5	12
M14X1.5	M14X1.5keg.	20	20	1.5	2.4	12	11.5	8.5	15
M16X1.5	M16X1.5keg.	22	23	1.5	2.4	12	13.0	8.5	15
M18X1.5	M18X1.5keg.	24	25	2.0	2.4	12	14.5	8.5	15
M20X1.5	M20X1.5keg.	26	27	2.0	2.4	14	14.0	10.5	15
M22X1.5	M22X1.5keg.	28	28	2.5	2.4	14	15.5	10.5	15
M26X1.5	-	32	33	2.5	3.1	16	16.0	-	15
M27X2.0	-	33	33	2.5	3.1	16	19.0	-	15
M33X2.0	-	40	41	2.5	3.1	18	19.0	-	15
M42X2.0	-	50	581	2.5	3.1	20	19.5	-	15
M48X2.0	-	56	56	2.5	3.1	22	22.0	-	15
G1/8	1/8 NPT	15	15	1.0	-	8	-	6.9	-
G1/4	1/4 NPT	19	20	1.5	-	12	-	10.0	-
G3/8	3/8 NPT	23	23	2.0	-	12	-	10.3	-
G1/2	1/2 NPT	27	28	2.5	-	14	-	13.6	-
G3/4	3/4 NPT	33	33	2.5	-	16	-	14.1	-
G1	1 NPT	40	41	2.5	-	18	-	16.8	-
G1-1/4	1-1/4 NPT	50	51	2.5	-	20	-	17.3	-
G1-1/2	1-1/2 NPT	56	56	2.5	-	22	-	17.3	-
7/16-20UNF	R1/8 keg.	21	-	1.6	2.4	-	11.5	5.5	12
9/16-18UNF	R1/4 keg.	25	-	1.6	2.5	-	12.7	8.5	12
3/4-16UNF	R3/8 keg.	30	-	2.4	2.5	-	14.3	8.5	15
7/8-14UNF	R1/2 keg.	34	-	2.4	2.5	-	16.7	10.5	15
1-1/16-12UN	R3/4 keg.	41	-	2.4	3.3	-	19.0	13.0	15
1-5/16-12UN	R1 keg.	49	-	3.2	3.3	-	19.0	16.0	15
1-5/8-12UN	R1-1/4 keg.	58	-	3.2	3.3	-	19.0	17.0	15
-	R1-1/2 keg.	-	-	-	-	-	-	17.0	-

Seamless precision stainless steel 1.4401

Stainless steel tubes (e.g. 1.4401), code X5CrNiMo 17122, must be cold-drawn and seamless, heat-treated without formation of scales, type m to DIN 17458, provide tolerances to DIN 2391, Part1.
The following tube wall thicknesses are suitable for use:

Tube O.D (D)	Tol.	* Wall Thickness (t)	Weight	Design Pressure DIN 2413	
				I	III
mm	mm	mm	kg/m	bar	bar
4	±0.1	0.75	0.061	391	376
		1.0	0.075	500	480
6	±0.1	1.0	0.125	372	357
		1.5	0.168	526	505
		2.0	0.200	662	637
		2.25	0.211	725	696
8	±0.1	1.0	0.175	347	277
		1.5	0.244	412	396
		2.0	0.300	526	505
		2.5	0.344	630	604
10	±0.1	1.0	0.225	294	238
		1.5	0.319	357	343
		2.0	0.401	458	439
		2.5	0.469	551	529
		3.0	0.525	638	612
12	±0.08	• 1.0	0.275	245	201
		1.5	0.394	368	291
		2.0	0.501	391	376
		2.5	0.594	474	455
		3.0	0.615	551	529
		3.5	0.744	624	599
15	±0.08	1.5	0.507	294	238
		2.0	0.651	321	309
		2.5	0.782	391	376
		3.0	0.901	458	439
16	±0.08	2.0	0.701	368	291
		2.5	0.845	370	355
		3.0	0.977	433	416
18	±0.08	• 1.5	0.620	245	201
		2.0	0.801	327	262
		2.5	0.967	333	320
		3.0	1.126	391	376

Tube O.D (D)	Tol.	* Wall Thickness (t)	Weight	Design Pressure DIN 2413	
				I	III
mm	mm	mm	kg/m	bar	bar
20	±0.08	2.5	1.095	368	291
		3.0	1.277	357	343
		3.5	1.433	408	392
		4.0	1.600	458	439
22	±0.08	• 2.0	1.002	267	218
		2.5	1.220	334	267
		3.0	1.426	328	315
25	±0.08	• 2.0	1.152	235	193
		2.5	1.408	294	238
		3.0	1.635	353	281
		4.0	2.092	378	363
		4.5	2.307	418	402
		5.0	2.501	458	439
28	±0.08	2.0	1.302	210	174
		2.5	1.594	263	214
		3.0	1.874	315	253
		4.0	2.402	342	328
		5.0	2.876	415	399
30	±0.08	3.0	2.028	294	238
		4.0	2.605	321	309
		5.0	3.400	391	376
35	±0.15	2.0	1.644	168	141
		2.5	2.018	210	174
		3.0	2.392	252	206
		4.0	3.086	336	269
		5.0	3.742	342	328
		6.0	4.351	401	385
38	±0.15	4.0	3.405	309	249
		5.0	4.131	318	305
		6.0	4.807	373	358
		7.0	5.426	427	410
42	±0.2	3.0	2.930	210	174
		4.0	3.798	280	227

• Reinforce tube inserts are recommended where thin-walled tubes are subject to severe strains.
* Permissible variation in wall thickness (DIN 2391)

Calculation Pressures:

- Calculated pressures to DIN 2413 part I for primarily static load conditions
- Yield point (K) : 245N/mm²(to DIN 17458)
- Safety factor (S) : 1.5
- Allowance factor (C)

  P = 20 x K x t x c / (S x D) (bar)

- Calculated pressures to DIN 2413 part III for dynamic load conditions
- Yield point (K) : 216N/mm² (assumed value)
- Safety factor (S) : 1.5

  P = 20 x K x t x c / (S x (D + t x c)) (bar)

Consideration factors of wall thickness divergence for static and dynamic stress.

Tube Range	4mm / 5mm	6mm / 8mm	Larger
Factor (C)	0.8	0.85	0.9

Note

For a diameter ratio of O.D/I.D>1.35,calculation made to DIN 2413 part III and based on a pulsating fatigue limit of 225 N/mm²

Temperature range : -60°C to + 400°C Reduction in pressure for higher temperatures

Ordering Information

Selection the applicable options from designators listed.

DDMC	12S	02N	S6
Fitting Name Designator See Page 7 ~ 9	Tube O.D & Series Designator	Thread Designator	Body Material Designaltor

Tube O.D Designators

Tube Size	4mm	6mm	.....	35mm	38mm	42mm
Identifier	04	06	.....	35	38	42

Series Designators

Series	Very Light	Light	Heavy
Identifier	LL	L	S

Pipe Thread Designators

Thread Type	Symbol	Standard	Thread Size								
			1/8	1/4	3/8	1/2	3/4	1	1-1/4	1-1/2	2
NPT	N	ASME B 1.20.1	01N	02N	03N	04N	06N	08N	10N	12N	16N
PT	R	ISO 7-1, BS-21, JIS B0203	01R	02R	03R	04R	06R	08R	10R	12R	16R
PF	G	ISO 228-1, BS 2779, JIS B 0202	01G	02G	03G	04G	06G	08G	10G	12G	16G

Metric Thread Designators

Thread Type	Symbol	Standard	Thread Size								
			M8x1.0	M10x1.0	M12x1.5	M14x1.5	.....	M27x2.0	M33.0x2.0	M42x2.0	M48x2.0
Metric	M	DIN 13 Parallel	M8	M10	M12	M14	.....	M27	M33	M42	M48
	M-K	DIN 158 Taper (keg)	M8K	M10K	M12K	M14K	.....	M27K	M33K	M42K	M48K

Unified Thread Designators

Thread Type	Symbol	Standard	Thread Size												
			5/16	3/8	7/16	1/2	9/16	3/4	7/8	1-1/16	1-3/16	1-5/16	1-5/8	1-7/8	2-1/2
UN/UNF	U	ASME B 1.1	02U	03U	04U	05U	06U	08U	10U	12U	14U	16U	20U	24U	32U

Body Material Designators

Series	Carbon Steel (DIN3859)	Stainless Steel (DIN 17440 / 1.4401 or ASTM A276 / A479 type 316)	Brass
Identifier	CS	S6	BS

Tube to Tube

Tube to Pipe

Tube to Tube (Adjustable Fittings)

Tube to Pipe (Adjustable Fittings)

Banjo Fittings

Gauge Connector & Test Couplings

Pressure Gauge Connector (BSP Paralled) with DKI-Ring
DDGC-G  120

Swivel Gauge Adaptor (BSP Paralled) with Cone and DKI-Ring
DDGE-G  120

Gauge Connector (BSP Paralled) with Standpipe and DKI-Ring
DDGA-G  120

Tee Test Coupling with Threaded Connection DDEMA3-02G
DDGMA  121

Test Coupling with Threaded Connection M16
DDEMA3  121

Weld Fittings

Welding Connector
DDAS  122

Welding Connector with DAK
DDASK  123

Welding Nipple with O-Ring
DDAK  124

Reducing Welding Nipple with O-Ring
DDAKR  124

ETC (Adaptor, Plug, Cap, Sprare Part)

Male Female Adaptor (BSP Paralled)
DMFAD  126

Male Female Adaptor (BSP Paralled)
DMFAE  126

Male Female Adaptor (BSP Paralled)with ED-Ring
DMFAD-ED  127

Male Female Adaptor (BSP Paralled)with ED-Ring
DMFAE-ED  127

Blanking Plugs for Port with ED-Ring
DDVSTI-GED/MED  128

Blanking Plugs with O-Ring (accord.to ISO6149-3/DIN3582)
DDVSTI  128

Blanking Plug with O-Ring
DDVKA  129

Tube Cap
DDCA  129

Nut
DDN  130

Cutting Ring
DDS  131

Straight Union

DDU

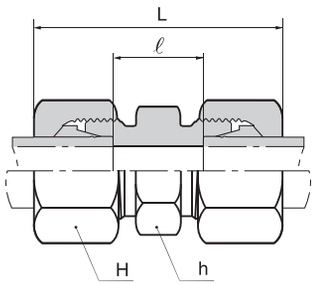

Series	Part No.	Tube O.D	H	h	L	ℓ
LL PN-100	DDU-04LL	4	10	9	31	12
	DDU-06LL	6	12	11	32	9
	DDU-08LL	8	14	12	35	12
	DDU-10LL	10	17	14	35	12
	DDU-12LL	12	19	17	35	11
L PN-315	DDU-06L	6	14	12	39	10
	DDU-08L	8	17	14	40	11
	DDU-10L	10	19	17	42	13
	DDU-12L	12	22	19	43	14
	DDU-15L	15	27	24	46	16
	DDU-18L	18	32	27	48	16
PN-160	DDU-22L	22	36	32	52	20
	DDU-28L	28	41	41	54	21
	DDU-35L	35	50	46	63	20
	DDU-42L	42	60	55	66	21
S PN-630	DDU-06S	6	17	14	45	16
	DDU-08S	8	19	17	47	18
	DDU-10S	10	22	19	49	17
	DDU-12S	12	24	22	51	19
	DDU-14S	14	27	24	57	22
PN-400	DDU-16S	16	30	27	57	21
	DDU-20S	20	36	32	66	23
	DDU-25S	25	46	41	74	26
	DDU-30S	30	50	46	80	27
PN-315	DDU-38S	38	60	55	90	29

Dimensions given approx. length with tightened nut. All dimensions are in millimeters, for reference only subject to change.

Union Elbow

DDL

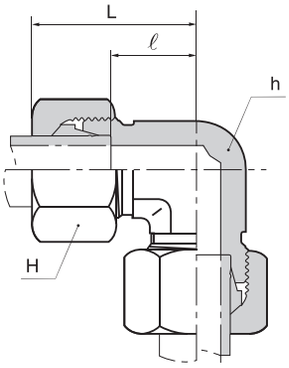

Series	Part No.	Tube O.D	H	h	L	ℓ
LL PN-100	DDL-04LL	4	10	9	21	11
	DDL-06LL	6	12	9	21	9.5
	DDL-08LL	8	14	12	23	11.5
	DDL-10LL	10	17	14	24	12.5
	DDL-12LL	12	19	17	25	13
L PN-315	DDL-06L	6	14	12	27	12
	DDL-08L	8	17	12	29	14
	DDL-10L	10	19	14	30	15
	DDL-12L	12	22	17	32	17
	DDL-15L	15	27	19	36	21.5
	DDL-18L	18	32	24	40	23.5
PN-160	DDL-22L	22	36	27	44	27.5
	DDL-28L	28	41	36	47	30.5
	DDL-35L	35	50	41	56	34.5
	DDL-42L	42	60	50	63	40
S PN-630	DDL-06S	6	17	12	31	16
	DDL-08S	8	19	14	32	17
	DDL-10S	10	22	17	34	17.5
	DDL-12S	12	24	17	38	21.5
	DDL-14S	14	27	19	40	22
PN-400	DDL-16S	16	30	24	43	24.5
	DDL-20S	20	36	27	48	26.5
	DDL-25S	25	46	36	54	30
	DDL-30S	30	50	41	62	35.5
PN-315	DDL-38S	38	60	50	72	41

Dimensions given approx. length with tightened nut. All dimensions are in millimeters, for reference only subject to change.

Union Tee

DDT

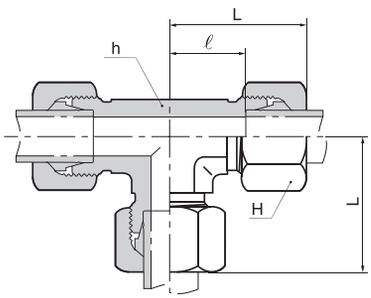

Series	Part No.	Tube O.D	H	h	L	ℓ
LL PN-100	DDT-04LL	4	10	9	21	11
	DDT-06LL	6	12	9	21	9.5
	DDT-08LL	8	14	12	23	11.5
	DDT-10LL	10	17	14	24	12.5
	DDT-12LL	12	19	14	27	15
L PN-315	DDT-06L	6	14	12	27	12
	DDT-08L	8	17	12	29	14
	DDT-10L	10	19	14	30	15
	DDT-12L	12	22	17	32	17
	DDT-15L	15	27	19	36	21
	DDT-18L	18	32	24	40	23.5
PN-160	DDT-22L	22	36	27	44	27.5
	DDT-28L	28	41	36	47	30.5
	DDT-35L	35	50	41	56	34.5
	DDT-42L	42	60	50	63	40
S PN-630	DDT-06S	6	17	12	31	16
	DDT-08S	8	19	14	32	17
	DDT-10S	10	22	17	34	17.5
	DDT-12S	12	24	17	38	21.5
	DDT-14S	14	27	19	40	22
PN-400	DDT-16S	16	30	24	43	24.5
	DDT-20S	20	36	27	48	26.5
	DDT-25S	25	46	36	54	30
	DDT-30S	30	50	41	62	35.5
PN-315	DDT-38S	38	60	50	72	41

Dimensions given approx. length with tightened nut. All dimensions are in millimeters, for reference only subject to change.

Union Cross

DDC

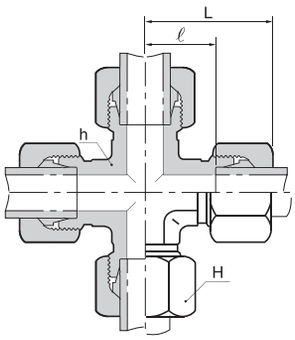

Series	Part No.	Tube O.D	H	h	L	ℓ
LL PN-100	DDC-04LL	4	10	9	21	11
	DDC-06LL	6	12	9	21	9.5
	DDC-08LL	8	14	12	23	11.5
	DDC-10LL	10	17	14	24	12.5
	DDC-12LL	12	19	14	27	15
L PN-315	DDC-06L	6	14	12	27	12
	DDC-08L	8	17	12	29	14
	DDC-10L	10	19	14	30	15
	DDC-12L	12	22	17	32	17
	DDC-15L	15	27	19	36	21
	DDC-18L	18	32	24	40	23.5
PN-160	DDC-22L	22	36	27	44	27.5
	DDC-28L	28	41	36	47	30.5
	DDC-35L	35	50	41	56	34.5
	DDC-42L	42	60	50	63	40
S PN-630	DDC-06S	6	17	12	31	16
	DDC-08S	8	19	14	32	17
	DDC-10S	10	22	17	34	17.5
	DDC-12S	12	24	17	38	21.5
	DDC-14S	14	27	19	40	22
PN-400	DDC-16S	16	30	24	43	24.5
	DDC-20S	20	36	27	48	26.5
	DDC-25S	25	46	36	54	30
	DDC-30S	30	50	41	62	35.5
PN-315	DDC-38S	38	60	50	72	41

Dimensions given approx. length with tightened nut. All dimensions are in millimeters, for reference only subject to change.

Reducing Union

DDUR

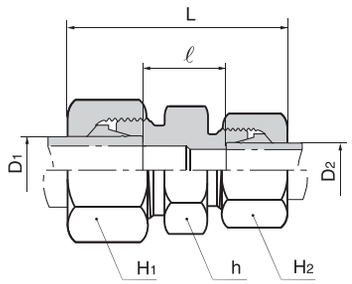

Series	Part No.	Tube O.D		H	H_1	h	L	ℓ
		D_1	D_2					
L PN-315	DDUR-08L-06L	8	6	17	14	14	40	11
	DDUR-10L-06L	10	6	19	14	17	41	12
	DDUR-10L-06L	10	8	19	17	17	41	12
	DDUR-12L-06L	12	6	22	14	19	42	13
	DDUR-12L-08L	12	8	22	17	19	42	13
	DDUR-12L-10L	12	10	22	19	19	43	14
	DDUR-15L-10L	15	10	27	19	24	45	15
	DDUR-15L-12L	15	12	27	22	24	45	15
	DDUR-18L-10L	18	10	32	19	27	46	15.5
	DDUR-18L-12L	18	12	32	22	27	46	15.5
	DDUR-18L-15L	18	15	32	27	27	48	16.5
PN-160	DDUR-22L-12L	22	12	36	22	32	48	17.5
	DDUR-22L-15L	22	15	36	27	32	50	18.5
	DDUR-22L-18L	22	18	36	32	32	50	18
	DDUR-28L-18L	28	18	41	32	41	52	19
	DDUR-28L-22L	28	22	41	36	41	54	21
	DDUR-35L-22L	35	22	50	36	46	59	21
	DDUR-35L-28L	35	28	50	41	46	59	21
S PN-630	DDUR-08S-06S	8	6	19	17	17	47	18
	DDUR-10S-06S	10	6	22	17	19	48	17.5
	DDUR-10S-08S	10	8	22	19	19	48	17.5
	DDUR-12S-06S	12	6	24	17	22	50	19.5
	DDUR-12S-08S	12	8	24	19	22	50	19.5
	DDUR-12S-10S	12	10	24	22	22	51	19
	DDUR-14S-10S	14	10	27	22	24	54	20.5
	DDUR-14S-12S	14	12	27	24	24	54	20.5
PN-400	DDUR-16S-12S	16	12	30	24	27	54	20
	DDUR-16S-14S	16	14	30	27	27	57	21.5
	DDUR-20S-10S	20	10	36	22	32	60	22
	DDUR-20S-12S	20	12	36	24	32	60	22
	DDUR-20S-16S	20	16	36	30	32	63	23
	DDUR-25S-16S	25	16	46	30	41	68	25
	DDUR-25S-20S	25	20	46	36	41	71	25.5
	DDUR-30S-20S	30	20	50	36	46	74	26
	DDUR-30S-25S	30	25	50	46	46	77	26.5
PN-315	DDUR-38S-30S	38	30	60	50	55	87	29.5

Dimensions given approx. length with tightened nut. All dimensions are in millimeters, for reference only subject to change.

Reducing Union Tee

DDTR

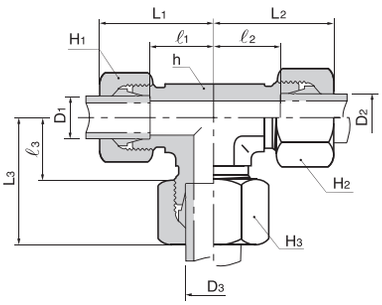

Series	Part No.	Tube O.D			H_1	H_2	H_3	h	L_1	L_2	L_3	ℓ_1	ℓ_2	ℓ_3
		D_1	D_2	D_3										
L PN-315	DDTR-06L-06L-08L	6	6	8	14	14	17	14	29	29	29	14	14	14
	DDTR-08L-08L-06L	8	8	6	17	17	14	14	29	29	29	14	14	14
	DDTR-06L-06L-10L	6	6	10	14	14	19	14	30	30	30	15	15	15
	DDTR-08L-08L-10L	8	8	10	17	17	19	14	30	30	30	15	15	15
	DDTR-10L-10L-06L	10	10	6	19	19	14	14	30	30	30	15	15	15
	DDTR-10L-10L-08L	10	10	8	19	19	17	14	30	30	30	15	15	15
	DDTR-10L-06L-10L	10	6	10	19	14	19	14	30	30	30	15	15	15
	DDTR-08L-08L-12L	8	8	12	17	17	22	17	32	32	32	15	15	15
	DDTR-12L-12L-06L	12	12	6	22	22	14	17	32	32	32	17	17	17
	DDTR-12L-08L-08L	12	8	8	22	17	17	17	32	32	32	17	17	17
	DDTR-12L-12L-08L	12	12	8	22	22	17	17	32	32	32	17	17	17
	DDTR-12L-10L-10L	12	10	10	22	19	19	17	32	32	32	17	17	17
	DDTR-12L-12L-10L	12	12	10	22	22	19	17	32	32	32	17	17	17
	DDTR-12L-10L-12L	12	10	12	22	19	22	17	32	32	32	17	17	17
	DDTR-10L-10L-15L	10	10	15	19	19	27	19	36	36	36	21	21	21
	DDTR-12L-12L-15L	12	12	15	22	22	27	19	36	36	36	21	21	21
	DDTR-15L-15L-06L	15	15	6	27	27	14	19	36	36	36	21	21	21
	DDTR-15L-15L-10L	15	15	10	27	27	19	19	36	36	36	21	21	21
	DDTR-15L-12L-12L	15	12	12	27	22	22	19	36	36	36	21	21	21
	DDTR-15L-15L-12L	15	15	12	27	27	22	19	36	36	36	21	21	21
	DDTR-15L-12L-15L	15	12	15	27	22	27	19	36	36	36	21	21	21
	DDTR-12L-12L-18L	12	12	18	22	22	32	24	39	39	40	24	24	23.5
	DDTR-18L-10L-10L	18	10	10	32	19	19	24	40	39	39	23.5	24	24
	DDTR-18L-18L-10L	18	18	10	32	32	19	24	40	40	39	23.5	23.5	24
	DDTR-18L-18L-12L	18	18	12	32	32	22	24	40	40	39	23.5	23.5	24
	DDTR-18L-18L-15L	18	18	15	32	32	27	24	40	40	39	23.5	23.5	24
	DDTR-18L-10L-18L	18	10	18	32	19	32	24	40	39	40	23.5	24	23.5

Reducing Union Tee

DDTR

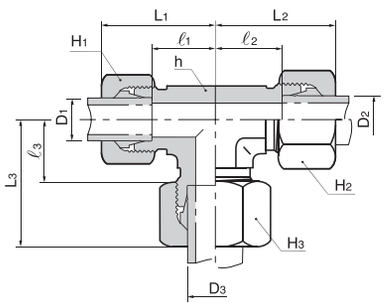

Series	Part No.	Tube O.D			H_1	H_2	H_3	h	L_1	L_2	L_3	ℓ_1	ℓ_2	ℓ_3
		D_1	D_2	D_3										
PN-160	DDTR-22L-22L-10L	22	22	10	36	36	19	27	44	44	43	27.5	27.5	28
	DDTR-22L-22L-12L	22	22	12	36	36	22	27	44	44	43	27.5	27.5	28
	DDTR-22L-15L-15L	22	15	15	36	27	27	27	44	43	43	27.5	28	28
	DDTR-22L-22L-15L	22	22	15	36	36	27	27	44	44	43	27.5	27.5	28
	DDTR-22L-18L-18L	22	18	18	36	32	32	27	44	44	44	27.5	27.5	27.5
	DDTR-22L-22L-18L	22	22	18	36	36	32	27	44	44	44	27.5	27.5	27.5
	DDTR-22L-18L-22L	22	18	22	36	32	36	27	44	44	44	27.5	27.5	27.5
	DDTR-28L-28L-10L	28	28	10	41	41	19	36	47	44	46	30.5	30.5	31
	DDTR-28L-28L-12L	28	28	12	41	41	22	36	47	47	46	30.5	30.5	31
	DDTR-28L-28L-15L	28	28	15	41	41	27	36	47	47	46	30.5	30.5	31
	DDTR-28L-28L-18L	28	28	18	41	41	32	36	47	47	47	30.5	30.5	30.5
	DDTR-28L-22L-22L	28	22	22	41	36	36	36	47	47	47	30.5	30.5	30.5
	DDTR-28L-28L-22L	28	28	22	41	41	36	36	47	47	47	30.5	30.5	30.5
S PN-630	DDTR-10S-10S-06S	10	10	6	22	22	17	17	34	34	33	17.5	17.5	18
	DDTR-12S-08S-08S	12	8	8	24	19	19	17	38	37	37	21.5	22	22
	DDTR-12S-12S-08S	12	12	8	24	24	19	17	38	38	37	21.5	21.5	22
	DDTR-12S-12S-10S	12	12	10	24	24	22	17	38	38	38	21.5	21.5	21.5
PN-400	DDTR-12S-12S-16S	12	12	16	24	24	30	24	42	42	43	25.5	25.5	24.5
	DDTR-16S-16S-06S	16	16	6	30	30	17	24	43	43	41	24.5	24.5	26
	DDTR-16S-16S-08S	16	16	8	30	30	19	24	43	43	41	24.5	24.5	26
	DDTR-16S-16S-10S	16	16	10	30	30	22	24	43	43	42	24.5	24.5	25.5
	DDTR-16S-16S-12S	16	16	12	30	30	24	24	43	43	42	24.5	24.5	25.5
	DDTR-16S-16S-20S	16	16	20	30	30	36	27	47	47	48	28.5	28.5	26.5
	DDTR-20S-20S-10S	20	20	10	36	36	22	27	48	48	46	26.5	26.5	29.5
	DDTR-20S-20S-12S	20	20	12	36	36	24	27	48	48	46	26.5	26.5	29.5
	DDTR-20S-20S-16S	20	20	16	36	36	30	27	48	48	47	26.5	26.5	28.5
	DDTR-20S-20S-25S	20	20	25	36	36	46	36	53	53	54	31.5	31.5	30
	DDTR-25S-25S-16S	25	25	16	46	46	30	36	54	54	52	30	30	33.5
	DDTR-25S-25S-20S	25	25	20	46	46	36	36	54	54	53	30	30	31.5
	DDTR-25S-25S-30S	25	25	30	46	46	50	41	61	61	62	37	37	35.5

Dimensions given approx. length with tightened nut. All dimensions are in millimeters, for reference only subject to change.

Bulkhead Union

DDBU

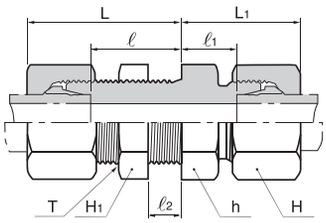

ℓ_2 =16mm Max.

Series	Part No.	Tube O.D	H	H_1	h	L	L_1	ℓ	ℓ_1	T
L PN-315	DDBU-06L	6	14	17	17	42	22	27	7	M12 x 1.5
	DDBU-08L	8	17	19	19	42	23	27	8	M14 x 1.5
	DDBU-10L	10	19	22	22	43	25	28	10	M16 x 1.5
	DDBU-12L	12	22	24	24	44	25	29	10	M18 x 1.5
	DDBU-15L	15	27	30	27	46	27	31	12	M22 x 1.5
	DDBU-18L	18	32	36	32	49	30	32.5	13.5	M26 x 1.5
PN-160	DDBU-22L	22	36	41	36	51	33	34.5	16.5	M30 x 2
	DDBU-28L	28	41	46	41	52	35	35.5	18.5	M36 x 2
	DDBU-35L	35	50	55	50	58	40	36.5	18.5	M45 x 2
	DDBU-42L	42	60	65	60	59	42	36	19	M52 x 2
S PN-630	DDBU-06S	6	17	19	19	44	27	29	12	M14 x 1.5
	DDBU-08S	8	19	22	22	44	28	29	13	M16 x 1.5
	DDBU-10S	10	22	24	24	46	31	29.5	14.5	M18 x 1.5
	DDBU-12S	12	24	27	27	47	31	30.5	14.5	M20 x 1.5
	DDBU-14S	14	27	30	30	50	35	32	17	M22 x 1.5
PN-400	DDBU-16S	16	30	32	32	50	35	31.5	16.5	M24 x 1.5
	DDBU-20S	20	36	41	41	55	39	33.5	17.5	M30 x 2
	DDBU-25S	25	46	46	46	59	44	35	20	M36 x 2
	DDBU-30S	30	50	50	50	64	48	37.5	21.5	M42 x 2
PN-315	DDBU-38S	38	60	65	65	68	53	37	22	M52 x 2

Dimensions given approx. length with tightened nut. All dimensions are in millimeters, for reference only subject to change.

Welding Bulkhead Union

DDBUW

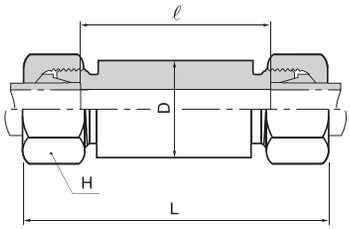

Series	Part No.	Tube O.D	D	H	L	ℓ
L PN-315	DDBUW-06L	6	18	14	85	56
	DDBUW-08L	8	20	17	85	56
	DDBUW-10L	10	22	19	87	58
	DDBUW-12L	12	25	22	87	58
	DDBUW-15L	15	28	27	100	70
	DDBUW-18L	18	32	32	101	69
PN-160	DDBUW-22L	22	36	36	105	73
	DDBUW-28L	28	40	41	106	73
	DDBUW-35L	35	50	50	114	71
	DDBUW-42L	42	60	60	115	70
S PN-630	DDBUW-06S	6	20	17	89	60
	DDBUW-08S	8	22	19	89	60
	DDBUW-10S	10	25	22	91	59
	DDBUW-12S	12	28	24	91	59
	DDBUW-14S	14	30	27	107	72
PN-400	DDBUW-16S	16	35	30	107	71
	DDBUW-20S	20	38	36	114	71
	DDBUW-25S	25	45	46	120	72
	DDBUW-30S	30	50	50	126	73
PN-315	DDBUW-38S	38	60	60	133	72

Dimensions given approx. length with tightened nut. All dimensions are in millimeters, for reference only subject to change.

Bulkhead Union Elbow

DDBL

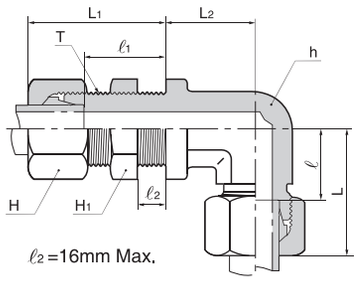

Series	Part No.	Tube O.D	H	H_1	h	L	L_1	L_2	ℓ	$ℓ_1$	T
L PN-315	DDBL-06L	6	14	17	12	27	42	14	12	27	M12 x 1.5
	DDBL-08L	8	17	19	12	29	42	17	14	27	M14 x 1.5
	DDBL-10L	10	19	22	14	30	43	18	15	28	M16 x 1.5
	DDBL-12L	12	22	24	17	32	44	20	17	29	M18 x 1.5
	DDBL-15L	15	27	30	19	36	46	23	21	31	M22 x 1.5
	DDBL-18L	18	32	36	24	40	49	24	23.5	32.5	M26 x 1.5
PN-160	DDBL-22L	22	36	41	27	44	51	30	27.5	34.5	M30 x 2
	DDBL-28L	28	41	46	36	47	52	34	30.5	35.5	M36 x 2
	DDBL-35L	35	50	55	41	56	58	39	34.5	36.5	M45 x 2
	DDBL-42L	42	60	65	50	63	59	43	40	36	M52 x 2
S PN-630	DDBL-06S	6	17	19	12	31	44	17	16	29	M14 x 1.5
	DDBL-08S	8	19	22	14	32	44	18	17	29	M16 x 1.5
	DDBL-10S	10	22	24	17	34	46	20	17.5	29.5	M18 x 1.5
	DDBL-12S	12	24	27	17	38	47	21	21.5	30.5	M20 x 1.5
	DDBL-14S	14	27	30	19	40	50	23	22	32	M22 x 1.5
PN-400	DDBL-16S	16	30	32	24	43	50	24	24.5	31.5	M24 x 1.5
	DDBL-20S	20	36	41	27	48	55	30	26.5	33.5	M30 x 2
	DDBL-25S	25	46	46	36	54	59	34	30	35	M36 x 2
	DDBL-30S	30	50	50	41	62	64	39	35.5	37.5	M42 x 2
PN-315	DDBL-38S	38	60	65	50	72	68	43	41	37	M52 x 2

Dimensions given approx. length with tightened nut. All dimensions are in millimeters, for reference only subject to change.

Male Connector
*(Metric Parallel) with *O-Ring*

DDOM-M

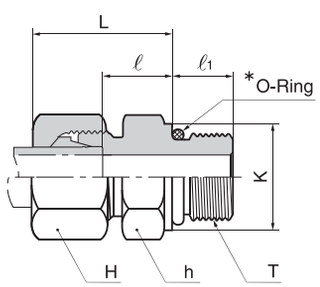

From F stud end

Series	Part No.	Tube O.D	H	h	K	L	ℓ	$ℓ_1$	T
L PN-315	DDOM-06L-M10	6	14	14	14	23	8.5	9.5	M10 x 1
	DDOM-08L-M12	8	17	17	17	25	10	11	M12 x 1.5
	DDOM-10L-M14	10	19	19	19	26	11	11	M14 x 1.5
	DDOM-12L-M16	12	22	22	22	27	12.5	12.5	M16 x 1.5
	DDOM-15L-M18	15	27	24	24	29	13.5	14	M18 x 1.5
	DDOM-18L-M22	18	32	27	27	30	14.5	15	M22 x 1.5
PN-160	DDOM-22L-M27	22	36	32	32	33	16.5	18.5	M27 x 2
	DDOM-28L-M33	28	41	41	41	34	17.5	18.5	M33 x 2
	DDOM-35L-M42	35	50	50	50	39	17.5	19	M42 x 2
S PN-630	DDOM-06S-M12	6	17	17	17	28	13	11	M12 x 1.5
	DDOM-08S-M14	8	19	19	19	30	15	11	M14 x 1.5
	DDOM-10S-M16	10	22	22	22	31	15	12.5	M16 x 1.5
	DDOM-12S-M18	12	24	24	24	33	17	14	M18 x 1.5
PN-400	DDOM-16S-M22	16	30	27	27	37	18.5	15	M22 x 1.5
	DDOM-20S-M27	20	36	32	32	42	20.5	18.5	M27 x 2
	DDOM-25S-M33	25	46	41	41	47	23	18.5	M33 x 2
	DDOM-30S-M42	30	50	50	50	50	23.5	19	M42 x 2

Dimensions given approximate length with tightened nut. All dimensions are in millimeters, for reference only subject to change.
****O-ring of NBR (e.g. PERBUNAN®) Standard, of FPM (e.g. VITON®) on request.***

Male Connector
*(Unified Parallel) with *O-Ring*

DDOM-U

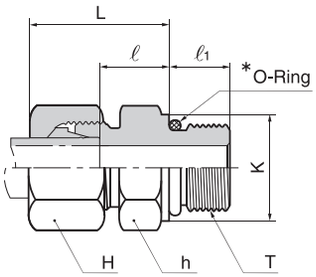

From F stud end

Series	Part No.	Tube O.D	H	h	K	L	ℓ	ℓ1	T
L PN-315	DDOM-08L-04U	8	17	17	14.4	25	10	9	7/16-20 UNF
	DDOM-10L-04U	10	19	17	14.4	26	11	10	7/16-20 UNF
	DDOM-12L-06U	12	22	19	17.6	26	11	10	9/16-18 UNF
	DDOM-12L-08U	12	22	24	22.3	28	13	11	3/4-16 UNF
	DDOM-12L-10U	12	22	27	25.5	29	14.3	12.7	7/8-14 UNF
	DDOM-15L-08U	15	27	24	22.3	29	14	11	3/4-16 UNF
	DDOM-15L-10U	15	27	27	25.5	30	15.3	12.7	7/8-14 UNF
	DDOM-18L-08U	18	32	27	22.3	31	14.5	11	3/4-16 UNF
	DDOM-18L-10U	18	32	27	25.5	31	14.8	12.7	7/8-14 UNF
PN-160	DDOM-22L-10U	22	36	32	25.5	33	16.8	12.7	7/8-14 UNF
	DDOM-22L-12U	22	36	32	31.9	33	16.5	15	1-1/16-12 UN
	DDOM-22L-16U	22	36	41	38.2	34	17.5	15	1-5/16-12 UN
	DDOM-28L-12U	28	41	41	31.9	34	17.5	15	1-1/16-12 UN
	DDOM-28L-16U	28	41	41	38.2	34	17.5	15	1-5/16-20 UN
	DDOM-35L-16U	35	50	46	38.2	39	17.5	15	1-5/16-20 UN
	DDOM-35L-20U	35	50	50	47.7	39	17.5	15	1-5/8-12 UN
	DDOM-42L-20U	42	60	55	47.7	42	19	15	1-5/8-12 UN
S PN-630	DDOM-08S-04U	8	19	17	16	30	15	9	7/16-20 UNF
	DDOM-10S-06U	10	22	19	17.6	31	14.5	10	9/16-18 UNF
	DDOM-12S-06U	12	24	22	17.6	31	14.5	10	9/16-18 UNF
	DDOM-12S-08U	12	24	24	22.3	34	17.5	11	3/4-16 UNF
PN-400	DDOM-16S-08U	16	30	24	22.3	34	15.5	11	3/4-16 UNF
	DDOM-16S-10U	16	30	27	25.5	37	18.8	12.7	7/8-14 UNF
	DDOM-20S-08U	20	36	32	22.3	42	20.5	11	3/4-16 UNF
	DDOM-20S-10U	20	36	32	25.5	42	20.8	12.7	7/8-14 UNF
	DDOM-20S-12U	20	36	32	31.9	42	20.5	15	1-1/16-12 UN
	DDOM-25S-12U	25	46	36	31.9	47	23	15	1-1/16-12 UN
	DDOM-25S-16U	25	46	41	38.2	47	23	15	1-5/16-12 UN
	DDOM-30S-16U	30	50	46	38.2	50	23.5	15	1-5/16-12 UN
	DDOM-30S-20U	30	50	50	47.7	50	23.5	15	1-5/8-12 UN
PN-315	DDOM-38S-20U	38	60	55	47.7	57	26	15	1-5/8-12 UN

Dimensions given approximate length with tightened nut. All dimensions are in millimeters, for reference only subject to change.
****O-ring of NBR (e.g. PERBUNAN®) Standard, of FPM (e.g. VITON®) on request.***

Male Connector
(NPT Thread)

DDMC-N

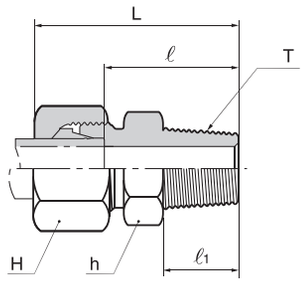

From C stud end

Series	Part No.	Tube O.D	H	h	L	ℓ	ℓ1	T
LL PN-100	DDMC-04LL-01N	4	10	11	28	18.5	9.9	NPT 1/8
	DDMC-06LL-01N	6	12	11	28	16.5	9.9	NPT 1/8
	DDMC-08LL-01N	8	14	12	30	18.5	9.9	NPT 1/8
L PN-315	DDMC-06L-01N	6	14	12	32	17	9.9	NPT 1/8
	DDMC-06L-02N	6	14	17	38	23	14.2	NPT 1/4
	DDMC-08L-02N	8	17	17	38	23	14.2	NPT 1/4
	DDMC-10L-02N	10	19	17	39	24	14.2	NPT 1/4
	DDMC-10L-03N	10	19	19	40	25	14.2	NPT 3/8
	DDMC-12L-02N	12	22	19	40	25	14.2	NPT 1/4
	DDMC-12L-03N	12	22	19	40	25	14.2	NPT 3/8
	DDMC-12L-04N	12	22	24	45	30	19.1	NPT 1/2
	DDMC-15L-04N	15	27	24	46	31	19.1	NPT 1/2
	DDMC-18L-04N	18	32	27	48	31.5	19.1	NPT 1/2
PN-160	DDMC-22L-06N	22	36	32	50	33.5	19.1	NPT 3/4
	DDMC-28L-08N	28	41	41	56	39.5	23.9	NPT 1
	DDMC-35L-10N	35	50	46	62	40.5	23.9	NPT 1-1/4
	DDMC-42L-12N	42	60	55	65	42	25.4	NPT 1-1/2
S PN-630	DDMC-06S-02N	6	17	17	43	28	14.2	NPT 1/4
	DDMC-08S-02N	8	19	17	43	28	14.2	NPT 1/4
	DDMC-10S-02N	10	22	19	44	27.5	14.2	NPT 1/4
	DDMC-10S-03N	10	22	19	44	27.5	14.2	NPT 3/8
	DDMC-12S-02N	12	24	22	46	29.5	14.2	NPT 1/4
	DDMC-12S-03N	12	24	22	46	29.5	14.2	NPT 3/8
	DDMC-12S-04N	12	24	22	51	34.5	19.1	NPT 1/2
	DDMC-14S-04N	14	27	24	54	36	19.1	NPT 1/2
PN-400	DDMC-16S-04N	16	30	27	54	35.5	19.1	NPT 1/2
	DDMC-20S-06N	20	36	32	59	37.5	19.1	NPT 3/4
	DDMC-25S-08N	25	46	41	69	45	23.9	NPT 1
	DDMC-30S-10N	30	50	46	73	46.5	23.9	NPT 1-1/4
PN-315	DDMC-38S-12N	38	60	55	80	49	25.4	NPT 1-1/2

Male Connector
(BSP Tapered)

DDMC-R

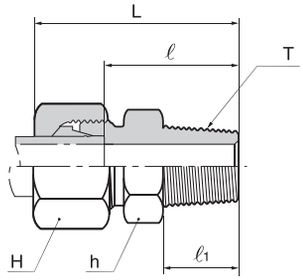

From C stud end

Series	Part No.	Tube O.D	H	h	L	ℓ	ℓ1	T
LL PN-100	DDMC-04LL-01R	4	10	11	26	16	8	PT 1/8
	DDMC-06LL-01R	6	12	11	26	14.5	8	PT 1/8
	DDMC-08LL-01R	8	14	12	28	16.5	8	PT 1/8
	DDMC-08LL-02R	8	14	14	32	20.5	12	PT 1/4
	DDMC-10LL-02R	10	17	14	32	20.5	12	PT 1/4
	DDMC-12LL-02R	12	19	17	32	20	12	PT 1/4
	DDMC-12LL-03R	12	19	17	32	20	12	PT 3/8
L PN-315	DDMC-06L-01R	6	14	12	30	15	8	PT 1/8
	DDMC-08L-02R	8	17	17	35	20	12	PT 1/4
	DDMC-10L-02R	10	19	17	36	21	12	PT 1/4
	DDMC-12L-02R	12	22	19	37	22	12	PT 1/4
	DDMC-12L-03R	12	22	19	37	22	12	PT 3/8
	DDMC-12L-04R	12	22	24	39	24	14	PT 1/2
	DDMC-15L-03R	15	27	24	38	23	12	PT 3/8
	DDMC-15L-04R	15	27	24	40	25	14	PT 1/2
	DDMC-18L-04R	18	32	27	41	25.5	14	PT 1/2
	DDMC-22L-06R	22	36	32	46	29.5	16	PT 3/4

Dimensions given approximate length with tightened nut. All dimensions are in millimeters, for reference only subject to change.

Male Connector
(BSP Parallel)

DDMC-G

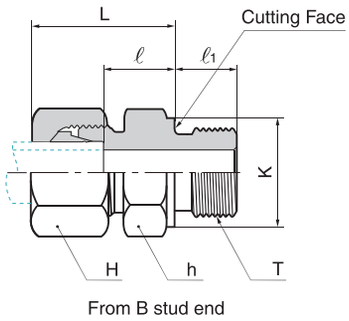

Series	Part No.	Tube O.D	H	h	K	L	ℓ	ℓ1	T
L PN-315	DDMC-06L-01G	6	14	14	14	23	8.5	8	PF 1/8
	DDMC-06L-02G	6	14	19	18	25	10	12	PF 1/4
	DDMC-06L-03G	6	14	22	22	26	11.5	12	PF 3/8
	DDMC-06L-04G	6	14	27	26	27	12	14	PF 1/2
	DDMC-08L-01G	8	17	14	14	23	8.5	8	PF 1/8
	DDMC-08L-02G	8	17	19	18	25	10	12	PF 1/4
	DDMC-08L-03G	8	17	22	22	26	11.5	12	PF 3/8
	DDMC-08L-04G	8	17	27	26	27	12	14	PF 1/2
	DDMC-10L-02G	10	19	19	18	26	11	12	PF 1/4
	DDMC-10L-03G	10	19	22	22	27	12.5	12	PF 3/8
	DDMC-10L-04G	10	19	27	26	28	13	14	PF 1/2
	DDMC-12L-02G	12	22	19	18	27	12	12	PF 1/4
	DDMC-12L-03G	12	22	22	22	27	12.5	12	PF 3/8
	DDMC-12L-04G	12	22	27	26	28	13	14	PF 1/2
	DDMC-12L-06G	12	22	32	32	29	14	16	PF 3/4
	DDMC-15L-03G	15	27	24	22	29	13.5	12	PF 3/8
	DDMC-15L-04G	15	27	27	26	29	14	14	PF 1/2
	DDMC-15L-06G	15	27	32	32	30	15	16	PF 3/4
	DDMC-18L-03G	18	32	27	22	29.5	14	12	PF 3/8
	DDMC-18L-04G	18	32	27	26	31	14.5	14	PF 1/2
	DDMC-18L-06G	18	32	32	32	30	14.5	16	PF 3/4
PN-160	DDMC-22L-04G	22	36	32	26	33	16.5	14	PF 1/2
	DDMC-22L-06G	22	36	32	32	33	16.5	16	PF 3/4
	DDMC-28L-06G	28	41	41	32	34	17.5	16	PF 3/4
	DDMC-28L-08G	28	41	41	39	34	17.5	18	PF 1
	DDMC-35L-08G	35	50	46	39	39	17.5	18	PF 1
	DDMC-35L-10G	35	50	50	49	39	17.5	20	PF 1-1/4
	DDMC-42L-12G	42	60	55	55	42	19	22	PF 1-1/2
S PN-630	DDMC-06S-02G	6	17	19	18	28	13	12	PF 1/4
	DDMC-06S-04G	6	17	27	26	33	18	14	PF 1/2
	DDMC-08S-02G	8	19	19	18	30	15	12	PF 1/4
	DDMC-08S-03G	8	19	22	22	30	15.5	12	PF 3/8
	DDMC-10S-02G	10	22	19	18	31	14.5	12	PF 1/4
	DDMC-10S-03G	10	22	22	22	31	15	12	PF 3/8
	DDMC-10S-04G	10	22	27	26	34	17.5	14	PF 1/2
	DDMC-12S-02G	12	24	22	18	33	16.5	12	PF 1/4
	DDMC-12S-03G	12	24	22	22	33	17	12	PF 3/8
	DDMC-12S-04G	12	24	27	26	34	17.5	14	PF 1/2
	DDMC-14S-03G	14	27	24	22	36	18.5	12	PF 3/8
	DDMC-14S-04G	14	27	27	26	37	19	14	PF 1/2
PN-400	DDMC-16S-03G	16	30	27	22	36	18	12	PF 3/8
	DDMC-16S-04G	16	30	27	26	37	18.5	14	PF 1/2
	DDMC-16S-06G	16	30	32	32	39	20.5	16	PF 3/4
	DDMC-20S-04G	20	36	32	26	42	20.5	14	PF 1/2
	DDMC-20S-06G	20	36	32	32	42	20.5	16	PF 3/4
	DDMC-25S-06G	25	46	41	32	47	23	16	PF 3/4
	DDMC-25S-08G	25	46	41	39	47	23	18	PF 1
PN-250	DDMC-30S-08G	30	50	46	39	50	23.5	18	PF 1
	DDMC-30S-10G	30	50	50	49	50	23.5	20	PF 1-1/4
	DDMC-38S-12G	38	60	55	55	57	26	22	PF 1-1/2
	DDMC-38S-10G	38	60	55	49	57	26	20	PF 1-1/4

Dimensions given approximate length with tightened nut. All dimensions are in millimeters, for reference only subject to change.

Male Connector
(Metric Parallel)
From B stud end

DDMC-M

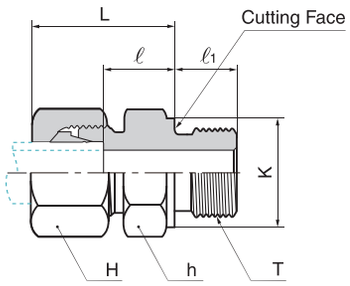

From B stud end

Series	Part No.	Tube O.D	H	h	K	L	ℓ	ℓ1	T
L PN-315	DDMC-06L-M10	6	14	14	14	23	8.5	8	M10 x 1
	DDMC-08L-M12	8	17	17	17	25	10	12	M12 x 1.5
	DDMC-08L-M18	8	17	24	23	26	11.5	12	M18 x 1.5
	DDMC-10L-M14	10	19	19	19	26	11	12	M14 x 1.5
	DDMC-10L-M16	10	19	22	21	27	12	12	M16 x 1.5
	DDMC-10L-M18	10	19	24	23	27	12.5	12	M18 x 1.5
	DDMC-10L-M22	10	19	27	27	29	14	14	M22 x 1.5
	DDMC-12L-M14	12	22	19	19	26	11	12	M14 x 1.5
	DDMC-12L-M16	12	22	22	21	27	12.5	12	M16 x 1.5
	DDMC-12L-M18	12	22	24	23	27	12.5	12	M18 x 1.5
	DDMC-12L-M22	12	22	27	27	29	14	14	M22 x 1.5
	DDMC-15L-M16	15	27	24	21	28	13	12	M16 x 1.5
	DDMC-15L-M18	15	27	24	23	29	13.5	12	M18 x 1.5
	DDMC-15L-M22	15	27	27	27	30	15	14	M22 x 1.5
	DDMC-18L-M18	18	32	27	23	30	14	12	M18 x 1.5
	DDMC-18L-M22	18	32	27	27	31	14.5	14	M22 x 1.5
PN-160	DDMC-22L-M22	22	36	32	27	33	16.5	14	M22 x 1.5
	DDMC-22L-M26	22	36	32	31	33	16.5	16	M26 x 1.5
	DDMC-28L-M33	28	41	41	39	34	17.5	18	M33 x 2
	DDMC-35L-M42	35	50	50	49	39	17.5	20	M42 x 2
	DDMC-42L-M48	42	60	55	55	42	19	22	M48 x 2
S PN-630	DDMC-06S-M12	6	17	17	17	28	13	12	M12 x 1.5
	DDMC-08S-M14	8	19	19	19	30	15	12	M14 x 1.5
	DDMC-10S-M16	10	22	22	21	31	15	12	M16 x 1.5
	DDMC-12S-M18	12	24	24	23	33	17	12	M18 x 1.5
	DDMC-12S-M22	12	24	27	27	34	17.5	14	M22 x 1.5
	DDMC-14S-M20	14	27	27	25	37	19	14	M20 x 1.5
PN-400	DDMC-16S-M18	16	30	27	23	36	18	12	M18 x 1.5
	DDMC-16S-M22	16	30	27	27	37	18.5	14	M22 x 1.5
	DDMC-20S-M27	20	36	32	32	42	20.5	16	M27 x 2
	DDMC-25S-M33	25	46	41	39	47	23	18	M33 x 2
PN-250	DDMC-30S-M42	30	50	50	49	50	23.5	20	M42 x 2
	DDMC-38S-M48	38	60	55	55	57	26	22	M48 x 2

Dimensions given approximate length with tightened nut. All dimensions are in millimeters, for reference only subject to change.

Male Connector
*(BSP Parallel) with *ED-Ring*
From E stud end

DDMC-GED

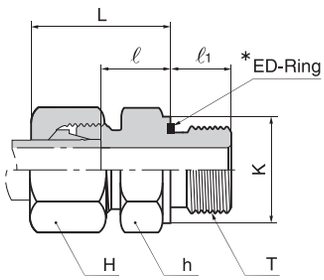

From E stud end

Series	Part No.	Tube O.D	H	h	K	L	ℓ	ℓ_1	T
L PN-315	DDMC-06L-01GED	6	14	14	13.9	23	8.5	8	PF 1/8
	DDMC-06L-02GED	6	14	19	18.9	25	10	12	PF 1/4
	DDMC-08L-01GED	8	17	14	13.9	24	8.5	8	PF 1/8
	DDMC-08L-02GED	8	17	19	18.9	25	10	12	PF 1/4
	DDMC-08L-03GED	8	17	22	21.9	26	11.5	12	PF 3/8
	DDMC-10L-02GED	10	19	19	18.9	26	11	12	PF 1/4
	DDMC-10L-03GED	10	19	22	21.9	27	12.5	12	PF 3/8
	DDMC-10L-04GED	10	19	27	26.9	28	13	14	PF 1/2
	DDMC-12L-02GED	12	22	19	18.9	27	12	12	PF 1/4
	DDMC-12L-03GED	12	22	22	21.9	27	12.5	12	PF 3/8
	DDMC-12L-04GED	12	22	27	26.9	28	13	14	PF 1/2
	DDMC-15L-03GED	15	27	24	21.9	29	13.5	12	PF 3/8
	DDMC-15L-04GED	15	27	27	26.9	29	14	14	PF 1/2
	DDMC-18L-04GED	18	32	27	26.9	31	14.5	14	PF 1/2
	DDMC-18L-06GED	18	32	32	31.9	31	14.5	16	PF 3/4
PN-160	DDMC-22L-06GED	22	36	32	31.9	33	16.5	16	PF 3/4
	DDMC-28L-08GED	28	41	41	39.9	34	17.5	18	PF 1
	DDMC-35L-10GED	35	50	50	49.9	39	17.5	20	PF 1-1/4
	DDMC-42L-12GED	42	60	55	54.9	42	19	22	PF 1-1/2
S PN-630	DDMC-06S-02GED	6	17	19	18.9	28	13	12	PF 1/4
	DDMC-08S-02GED	8	19	19	18.9	30	15	12	PF 1/4
	DDMC-08S-03GED	8	19	22	21.9	30	15.5	12	PF 3/8
	DDMC-10S-02GED	10	22	19	18.9	31	14.5	12	PF 1/4
	DDMC-10S-03GED	10	22	22	21.9	31	15	12	PF 3/8
	DDMC-10S-04GED	10	22	27	26.9	34	17.5	14	PF 1/2
	DDMC-12S-02GED	12	24	22	21.9	33	16.5	12	PF 1/4
	DDMC-12S-03GED	12	24	22	21.9	33	17	12	PF 3/8
	DDMC-12S-04GED	12	24	27	26.9	34	17.5	14	PF 1/2
	DDMC-14S-04GED	14	27	27	26.9	37	19	14	PF 1/2
PN-400	DDMC-16S-03GED	16	30	27	21.9	36	18	12	PF 3/8
	DDMC-16S-04GED	16	30	27	26.9	37	18.5	14	PF 1/2
	DDMC-16S-06GED	16	30	32	31.9	39	20.5	16	PF 3/4
	DDMC-20S-06GED	20	36	32	31.9	42	20.5	16	PF 3/4
	DDMC-25S-04GED	25	46	41	26.9	47	23	14	PF 1/2
	DDMC-25S-06GED	25	46	41	31.9	47	23	16	PF 3/4
	DDMC-25S-08GED	25	46	41	39.9	47	23	18	PF 1
	DDMC-30S-10GED	30	50	50	49.9	50	23.5	20	PF 1-1/4
PN-315	DDMC-38S-12GED	38	60	55	54.9	57	26	22	PF 1-1/2

Dimensions given approximate length with tightened nut. All dimensions are in millimeters, for reference only subject to change.
****ED-ring of NBR (e.g. PERBUNAN®) Standard, of FPM (e.g. VITON®) on request.***

Male Connector
*(Metric Parallel) with *ED-Ring*
From E stud end

DDMC-MED

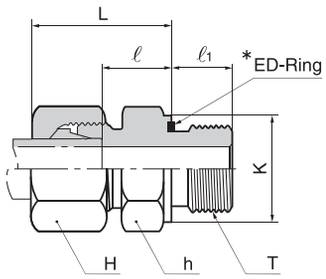

From E stud end

Series	Part No.	Tube O.D	H	h	K	L	ℓ	ℓ_1	T
L PN-315	DDMC-06L-M10ED	6	14	14	13.9	23	8.5	8	M10 x 1
	DDMC-08L-M12ED	8	17	17	16.9	25	10	12	M12 x 1.5
	DDMC-10L-M14ED	10	19	19	18.9	26	11	12	M14 x 1.5
	DDMC-12L-M16ED	12	22	22	21.9	27	12.5	12	M16 x 1.5
	DDMC-12L-M18ED	12	22	24	23.9	27	12.5	12	M18 x 1.5
	DDMC-12L-M22ED	12	22	27	26.9	29	14	14	M22 x 1.5
	DDMC-15L-M18ED	15	27	24	23.9	29	13.5	12	M18 x 1.5
	DDMC-15L-M22ED	15	27	27	26.9	30	15	14	M22 x 1.5
	DDMC-18L-M22ED	18	32	27	26.9	31	14.5	14	M22 x 1.5
PN-160	DDMC-22L-M26ED	22	36	32	31.9	33	16.5	16	M26 x 1.5
	DDMC-28L-M23ED	28	41	41	39.9	34	17.5	18	M33 x 2
	DDMC-35L-M42ED	35	50	50	49.9	39	17.5	20	M42 x 2
	DDMC-42L-M48ED	42	60	55	54.9	42	19	22	M48 x 2
S PN-630	DDMC-06S-M12ED	6	17	17	16.9	28	13	12	M12 x 1.5
	DDMC-08S-M14ED	8	19	19	18.9	30	15	12	M14 x 1.5
	DDMC-10S-M16ED	10	22	22	21.9	31	15	12	M16 x 1.5
	DDMC-12S-M18ED	12	24	24	23.9	33	17	12	M18 x 1.5
	DDMC-14S-M20ED	14	27	27	25.9	37	19	14	M20 x 1.5
PN-400	DDMC-16S-M22ED	16	30	27	26.9	37	18.5	14	M22 x 1.5
	DDMC-20S-M27ED	20	36	32	31.9	42	20.5	16	M27 x 2
	DDMC-25S-M33ED	25	46	41	39.9	47	23	18	M33 x 2
	DDMC-30S-M42ED	30	50	50	49.9	50	23.5	20	M42 x 2
PN-315	DDMC-38S-M48ED	38	60	55	54.9	57	26	22	M48 x 2

Dimensions given approximate length with tightened nut. All dimensions are in millimeters, for reference only subject to change.
****ED-ring of NBR (e.g. PERBUNAN®) Standard, of FPM (e.g. VITON®) on request.***

Male Elbow
(BSP Tapered)

DDLM-R

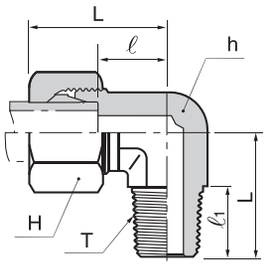

From C stud end

Series	Part No.	Tube O.D	H	h	L	L_1	ℓ	$ℓ_1$	T
LL PN-100	DDLM-04LL-01R	4	10	9	21	17	11	10	PT 1/8
	DDLM-06LL-01R	6	12	9	21	17	9.5	10	PT 1/8
	DDLM-08LL-01R	8	14	12	23	20	11.5	10	PT 1/8
	DDLM-10LL-02R	10	17	14	24	23	12.5	14	PT 1/4
	DDLM-12LL-02R	12	19	17	25	23	13	14	PT 1/4
L PN-315	DDLM-06L-01R	6	14	12	27	20	12	10	PT 1/8
	DDLM-08L-02R	8	17	12	29	26	14	14	PT 1/4
	DDLM-10L-02R	10	19	14	30	27	15	14	PT 1/4
	DDLM-12L-03R	12	22	17	32	28	17	15	PT 3/8
	DDLM-15L-04R	15	27	19	36	34	21	19	PT 1/2
	DDLM-18L-04R	18	32	24	40	36	23.5	19	PT 1/2
S PN-400	DDLM-06S-02R	6	17	12	31	26	16	14	PT 1/4
	DDLM-08S-02R	8	19	14	32	27	17	14	PT 1/4
	DDLM-10S-03R	10	22	17	34	28	17.5	15	PT 3/8
	DDLM-12S-03R	12	24	17	38	28	21.5	15	PT 3/8
	DDLM-14S-04R	14	27	19	40	32	22	19	PT 1/2
	DDLM-16S-04R	16	30	24	43	32	24.5	19	PT 1/2

Dimensions given approximate length with tightened nut. All dimensions are in millimeters, for reference only subject to change.

Male Elbow
(Metric Tapered)

DDLM-MK

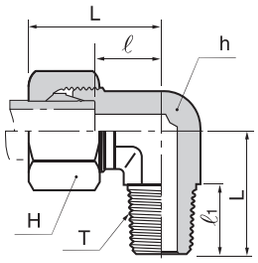

From C stud end

Series	Part No.	Tube O.D	H	h	L	L_1	ℓ	$ℓ_1$	T
LL PN-100	DDLM-04LL-M8K	4	10	9	21	17	11	8	M8 x 1keg
	DDLM-06LL-M10K	6	12	9	21	17	9.5	8	M10 x 1keg
	DDLM-08LL-M10K	8	14	12	23	20	11.5	8	M10 x 1keg
L PN-315	DDLM-06L-M10K	6	14	12	27	20	12	8	M10 x 1keg
	DDLM-08L-M12K	8	17	12	29	26	14	12	M12 x 1.5keg
	DDLM-10L-M14K	10	19	14	30	27	15	12	M14 x 1.5keg
	DDLM-12L-M16K	12	22	17	32	28	17	14	M16 x 1.5keg
	DDLM-15L-M18K	15	27	19	36	34	21	14	M18 x 1.5keg
	DDLM-18L-M22K	18	32	24	40	36	23.5	17	M22 x 1.5keg
S PN-400	DDLM-06S-M12K	6	17	12	31	26	16	12	M12 x 1.5keg
	DDLM-08S-M14K	8	19	14	32	27	17	12	M14 x 1.5keg
	DDLM-10S-M16K	10	22	17	34	28	17.5	12	M16 x 1.5keg
	DDLM-12S-M18K	12	24	17	38	28	21.5	12	M18 x 1.5keg
	DDLM-14S-M20K	14	27	19	40	32	22	14	M20 x 1.5keg
	DDLM-16S-M22K	16	30	24	43	32	24.5	17	M22 x 1.5keg

Dimensions given approximate length with tightened nut. All dimensions are in millimeters, for reference only subject to change.

Female Connector
(BSP Parallel)

DDFC-G

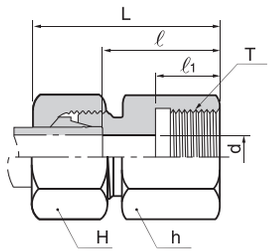

From Y Tapped Hole

Series	Part No.	Tube O.D	d	H	h	L	ℓ	ℓ1	T
L PN-315	DDFC-06L-01G	6	4	14	14	34	19	12	PF 1/8
	DDFC-08L-02G	8	6	17	19	39	24	17	PF 1/4
	DDFC-08L-03G	8	6	17	24	40	25	17	PF 3/8
	DDFC-08L-04G	8	6	17	27	44	29	20	PF 1/2
	DDFC-10L-02G	10	8	19	19	40	25	17	PF 1/4
	DDFC-10L-03G	10	8	19	24	41	26	17	PF 3/8
	DDFC-10L-04G	10	8	19	27	45	30	20	PF 1/2
	DDFC-12L-03G	12	10	22	24	41	26	17	PF 3/8
	DDFC-12L-04G	12	10	22	27	45	30	20	PF 1/2
	DDFC-15L-04G	15	12	27	27	46	31	20	PF 1/2
	DDFC-18L-04G	18	15	32	27	47	30.5	20	PF 1/2
PN-160	DDFC-22L-06G	22	19	36	36	52	35.5	22	PF 3/4
	DDFC-28L-08G	28	24	41	41	55	38	24.5	PF 1
	DDFC-35L-10G	35	30	50	55	63	41	26.5	PF 1-1/4
	DDFC-42L-12G	42	36	60	60	65	42.5	28.5	PF 1-1/2
S PN-630	DDFC-06S-02G	6	4	17	19	41	26	17	PF 1/4
	DDFC-08S-02G	8	5	19	19	41	26	17	PF 1/4
	DDFC-10S-03G	10	7	22	24	43	26.5	17	PF 3/8
	DDFC-12S-03G	12	8	24	24	43	26.5	17	PF 3/8
	DDFC-14S-04G	14	10	27	30	50	32	20	PF 1/2
PN-400	DDFC-16S-04G	16	12	30	30	50	31.5	20	PF 1/2
	DDFC-20S-06G	20	16	36	36	56	34.5	22	PF 3/4
	DDFC-25S-08G	25	20	46	41	62	37.5	24.5	PF 1
	DDFC-30S-10G	30	25	50	55	69	42	26.5	PF 1-1/4
PN-315	DDFC-38S-12G	38	32	60	60	74	43.5	28.5	PF 1-1/2

Female Connector
(Metric Parallel)

DDFC-M

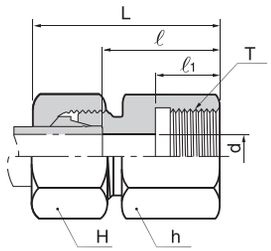

From Y Tapped Hole

Series	Part No.	Tube O.D	d	H	h	L	ℓ	ℓ1	T
L PN-315	DDFC-06L-M10	6	4	14	14	34	19.5	12.5	M10 x 1
	DDFC-08L-M12	8	6	17	17	39	24	17	M12 x 1.5
	DDFC-10L-M14	10	8	19	19	40	25	17	M14 x 1.5
	DDFC-12L-M16	12	10	22	22	41	26	17	M16 x 1.5
	DDFC-15L-M18	15	12	27	24	43	28	17	M18 x 1.5
	DDFC-18L-M22	18	15	32	30	46	29.5	19	M22 x 1.5
PN-160	DDFC-22L-M26	22	19	36	32	51	34.5	21	M26 x 1.5
	DDFC-28L-M33	28	24	41	41	54	37.5	24	M33 x 2
	DDFC-35L-M42	35	30	50	55	62	40.5	26	M42 x 2
	DDFC-42L-M48	42	36	60	60	65	42	28	M48 x 2
S PN-630	DDFC-06S-M12	6	4	17	17	41	26	17	M12 x 1.5
	DDFC-08S-M14	8	5	19	17	41	26	17	M14 x 1.5
	DDFC-10S-M16	10	7	22	22	43	26.5	17	M16 x 1.5
	DDFC-12S-M18	12	8	24	24	44	27.5	17	M18 x 1.5
	DDFC-14S-M20	14	10	27	27	49	31	19	M20 x 1.5
PN-400	DDFC-16S-M22	16	12	30	30	49	30.5	19	M22 x 1.5
	DDFC-20S-M27	20	16	36	36	56	34.5	22	M27 x 2
	DDFC-25S-M33	25	20	46	41	61	37	24	M33 x 2
	DDFC-30S-M42	30	25	50	55	68	41.5	26	M42 x 2
PN-250	DDFC-38S-M48	38	32	60	60	74	43	28	M48 x 2

Dimensions given approximate length with tightened nut. All dimensions are in millimeters, for reference only subject to change.

Adjustable Elbow with Standpipe

DDLA

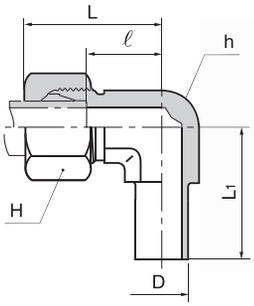

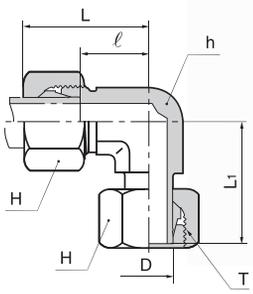

*Option

Series	Part No.	Tube O.D	D	H	h	L	L_1	ℓ	T
L PN-315	DDLA-06L	6	6	14	12	27	26	12	M12 x 1.5
	DDLA-08L	8	8	17	12	29	27.5	14	M14 x 1.5
	DDLA-10L	10	10	19	14	30	29	15	M16 x 1.5
	DDLA-12L	12	12	22	17	32	29.5	17	M18 x 1.5
	DDLA-15L	15	15	27	19	36	32.5	21	M22 x 1.5
	DDLA-18L	18	18	32	24	40	35.5	23.5	M26 x 1.5
PN-160	DDLA-22L	22	22	36	27	44	38.5	27.5	M30 x 2
	DDLA-28L	28	28	41	36	47	41.5	30.5	M36 x 2
	DDLA-35L	35	35	50	41	56	51	34.5	M45 x 2
	DDLA-42L	42	42	60	50	63	56	40	M52 x 2
S PN-630	DDLA-06S	6	6	17	12	31	27	16	M14 x 1.5
	DDLA-08S	8	8	19	14	32	27.5	17	M16 x 1.5
	DDLA-10S	10	10	22	17	34	30	17.5	M18 x 1.5
	DDLA-12S	12	12	24	17	38	31	21.5	M20 x 1.5
	DDLA-14S	14	14	27	19	40	35	22	M22 x 1.5
PN-400	DDLA-16S	16	16	30	24	43	36.5	24.5	M24 x 1.5
	DDLA-20S	20	20	36	27	48	44.5	26.5	M30 x 2
	DDLA-25S	25	25	46	36	54	50	30	M36 x 2
	DDLA-30S	30	30	50	41	62	55	35.5	M42 x 2
PN-315	DDLA-38S	38	38	60	50	72	63	41	M52 x 2

Dimensions given approximate length with tightened nut. All dimensions are in millimeters, for reference only subject to change. Without male stud, but with pre-settled nut and cutting ring for connection.
****Option : Preswaging nut and cutting ring - DDLA-06S-PS-S6***

Adjustable Branch Tee with Standpipe

DDBTA

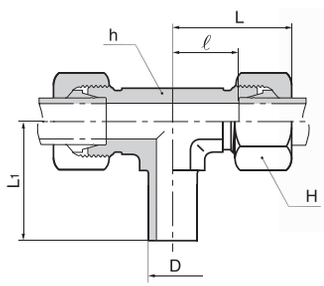

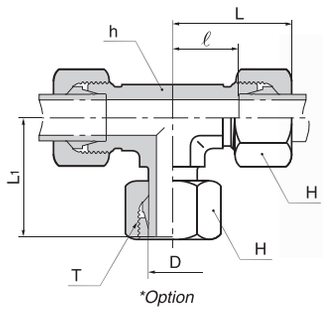

*Option

Series	Part No.	Tube O.D	D	H	h	L	L_1	ℓ	T
L PN-315	DDBTA-06L	6	6	14	12	27	26	12	M12 x 1.5
	DDBTA-08L	8	8	17	12	29	27.5	14	M14 x 1.5
	DDBTA-10L	10	10	19	14	30	29	15	M16 x 1.5
	DDBTA-12L	12	12	22	17	32	29.5	17	M18 x 1.5
	DDBTA-15L	15	15	27	19	36	32.5	21	M22 x 1.5
	DDBTA-18L	18	18	32	24	40	35.5	23.5	M26 x 1.5
PN-160	DDBTA-22L	22	22	36	27	44	38.5	27.5	M30 x 2
	DDBTA-28L	28	28	41	36	47	41.5	30.5	M36 x 2
	DDBTA-35L	35	35	50	41	56	51	34.5	M45 x 2
	DDBTA-42L	42	42	60	50	63	56	40	M52 x 2
S PN-630	DDBTA-06S	6	6	17	12	31	27	16	M14 x 1.5
	DDBTA-08S	8	8	19	14	32	27.5	17	M16 x 1.5
	DDBTA-10S	10	10	22	17	34	30	17.5	M18 x 1.5
	DDBTA-12S	12	12	24	17	38	31	21.5	M20 x 1.5
	DDBTA-14S	14	14	27	19	40	35	22	M22 x 1.5
PN-400	DDBTA-16S	16	16	30	24	43	36.5	24.5	M24 x 1.5
	DDBTA-20S	20	20	36	27	48	44.5	26.5	M30 x 2
	DDBTA-25S	25	25	46	36	54	50	30	M36 x 2
	DDBTA-30S	30	30	50	41	62	55	35.5	M42 x 2
PN-315	DDBTA-38S	38	38	60	50	72	63	41	M52 x 2

Dimensions given approximate length with tightened nut. All dimensions are in millimeters, for reference only subject to change. Without male stud, but with pre-settled nut and cutting ring for connection.
****Option : Preswaging nut and cutting ring - DDBTA-06S-PS-S6***

Adjustable Run Tee with Standpipe

DDRTA

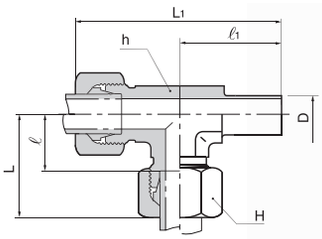

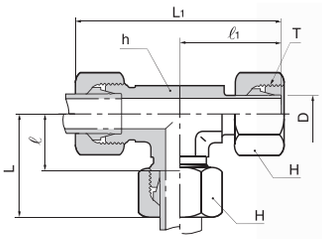

**Option*

Series	Part No.	Tube O.D	D	H	h	L	L_1	ℓ	$ℓ_1$	T
L PN-315	DDRTA-06L	6	6	14	12	27	53	12	26	M12 x 1.5
	DDRTA-08L	8	8	17	12	29	56	14	27.5	M14 x 1.5
	DDRTA-10L	10	10	19	14	30	59	15	29	M16 x 1.5
	DDRTA-12L	12	12	22	17	32	62	17	29.5	M18 x 1.5
	DDRTA-15L	15	15	27	19	36	69	21	32.5	M22 x 1.5
	DDRTA-18L	18	18	32	24	40	75	23.5	35.5	M26 x 1.5
PN-160	DDRTA-22L	22	22	36	27	44	83	27.5	38.5	M30 x 2
	DDRTA-28L	28	28	41	36	47	91	30.5	41.5	M36 x 2
	DDRTA-35L	35	35	50	41	56	111	34.5	51	M45 x 2
	DDRTA-42L	42	42	60	50	63	123	40	56	M52 x 2
S PN-630	DDRTA-06S	6	6	17	12	31	58	16	27	M14 x 1.5
	DDRTA-08S	8	8	19	14	32	61	17	27.5	M16 x 1.5
	DDRTA-10S	10	10	22	17	34	66	17.5	30	M18 x 1.5
	DDRTA-12S	12	12	24	17	38	71	21.5	31	M20 x 1.5
	DDRTA-14S	14	14	27	19	40	75	22	35	M22 x 1.5
PN-400	DDRTA-16S	16	16	30	24	43	79	24.5	36.5	M24 x 1.5
	DDRTA-20S	20	20	36	27	48	93	26.5	44.5	M30 x 2
	DDRTA-25S	25	25	46	36	54	105	30	50	M36 x 2
	DDRTA-30S	30	30	50	41	62	119	35.5	55	M42 x 2
PN-315	DDRTA-38S	38	38	60	50	72	138	41	63	M52 x 2

Dimensions given approximate length with tightened nut. All dimensions are in millimeters, for reference only subject to change. Without male stud, but with pre-settled nut and cutting ring for connection.
****Option : Preswaging nut and cutting ring - DDRTA-06S-PS-S6***

Swivel Adjustable Elbow with Cone

DDEW

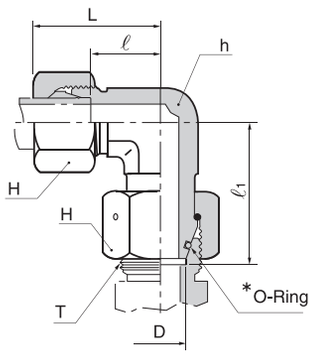

Series	Part No.	Tube O.D	H	h	L	ℓ	$ℓ_1$	T
L PN-315	DDEW-06L	6	14	12	27	12	26	M12 x 1.5
	DDEW-08L	8	17	12	29	14	27.5	M14 x 1.5
	DDEW-10L	10	19	14	30	15	29	M16 x 1.5
	DDEW-12L	12	22	17	32	17	29.5	M18 x 1.5
	DDEW-15L	15	27	19	36	21	32.5	M22 x 1.5
	DDEW-18L	18	32	24	40	23.5	35.5	M26 x 1.5
PN-160	DDEW-22L	22	36	27	44	27.5	38.5	M30 x 2
	DDEW-28L	28	41	36	47	30.5	41.5	M36 x 2
	DDEW-35L	35	50	41	56	34.5	51	M45 x 2
	DDEW-42L	42	60	50	63	40	56	M52 x 2
S PN-630	DDEW-06S	6	17	12	31	16	27	M14 x 1.5
	DDEW-08S	8	19	14	32	17	27.5	M16 x 1.5
	DDEW-10S	10	22	17	34	17.5	30	M18 x 1.5
	DDEW-12S	12	24	17	38	21.5	31	M20 x 1.5
	DDEW-14S	14	27	19	40	22	35	M22 x 1.5
PN-400	DDEW-16S	16	30	24	43	24.5	36.5	M24 x 1.5
	DDEW-20S	20	36	27	48	26.5	44.5	M30 x 2
	DDEW-25S	25	46	36	54	30	50	M36 x 2
	DDEW-30S	30	50	41	62	35.5	55	M42 x 2
PN-315	DDEW-38S	38	60	50	72	41	63	M52 x 2

Dimensions given approximate length with tightened nut. All dimensions are in millimeters, for reference only subject to change. Without male stud, but supplied with fitted O-Ring for connection.
****O-ring of NBR (e.g. PERBUNAN®) Standard, of FPM (e.g. VITON®) on request.***
****Option : Preswaging nut and sleeve - DDGA-06S-04G-PS-S6***

Swivel Adjustable Branch Tee with Cone

DDET

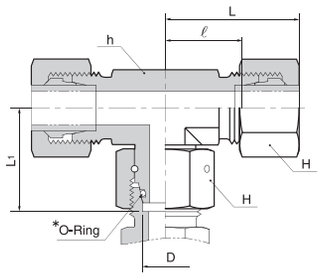

Series	Part No.	Tube O.D	H	h	L	L_1	ℓ	T
L PN-315	DDET-06L	6	14	12	27	26	12	M12 x 1.5
	DDET-08L	8	17	12	29	27.5	14	M14 x 1.5
	DDET-10L	10	19	14	30	29	15	M16 x 1.5
	DDET-12L	12	22	17	32	29.5	17	M18 x 1.5
	DDET-15L	15	27	19	36	32.5	21	M22 x 1.5
	DDET-18L	18	32	24	40	35.5	23.5	M26 x 1.5
PN-160	DDET-22L	22	36	27	44	38.5	27.5	M30 x 2
	DDET-28L	28	41	36	47	41.5	30.5	M36 x 2
	DDET-35L	35	50	41	56	51	34.5	M45 x 2
	DDET-42L	42	60	50	63	56	40	M52 x 2
S PN-630	DDET-06S	6	17	12	31	27	16	M14 x 1.5
	DDET-08S	8	19	14	32	27.5	17	M16 x 1.5
	DDET-10S	10	22	17	34	30	17.5	M18 x 1.5
	DDET-12S	12	24	17	38	31	21.5	M20 x 1.5
	DDET-14S	14	27	19	40	35	22	M22 x 1.5
PN-400	DDET-16S	16	30	24	43	36.5	24.5	M24 x 1.5
	DDET-20S	20	36	27	48	44.5	26.5	M30 x 2
	DDET-25S	25	46	36	54	50	30	M36 x 2
	DDET-30S	30	50	41	62	55	35.5	M42 x 2
PN-315	DDET-38S	38	60	50	72	63	41	M52 x 2

Dimensions given approximate length with tightened nut. All dimensions are in millimeters, for reference only subject to change. Without male stud, but with pre-settled nut and cutting ring for connection.
**O-ring of NBR (e.g. PERBUNAN®) Standard, of FPM (e.g. VITON®) on request.*

Swivel Adjustable Run Tee with Cone

DDEL

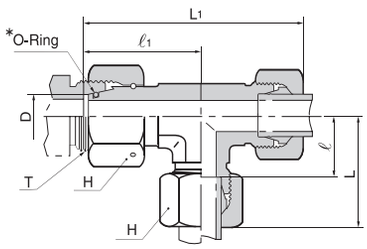

Series	Part No.	Tube O.D	H	h	L	L_1	ℓ	$ℓ_1$	T
L PN-315	DDEL-06L	6	14	12	27	53	12	26	M12 x 1.5
	DDEL-08L	8	17	12	29	56	14	27.5	M14 x 1.5
	DDEL-10L	10	19	14	30	59	15	29	M16 x 1.5
	DDEL-12L	12	22	17	32	61	17	29.5	M18 x 1.5
	DDEL-15L	15	27	19	36	69	21	32.5	M22 x 1.5
	DDEL-18L	18	32	24	40	75	23.5	35.5	M26 x 1.5
PN-160	DDEL-22L	22	36	27	44	82	27.5	38.5	M30 x 2
	DDEL-28L	28	41	36	47	89	30.5	41.5	M36 x 2
	DDEL-35L	35	50	41	56	107	34.5	51	M45 x 2
	DDEL-42L	42	60	50	63	119	40	56	M52 x 2
S PN-630	DDEL-06S	6	17	12	31	58	16	27	M14 x 1.5
	DDEL-08S	8	19	14	32	59	17	27.5	M16 x 1.5
	DDEL-10S	10	22	17	34	64	17.5	30	M18 x 1.5
	DDEL-12S	12	24	17	38	69	21.5	31	M20 x 1.5
	DDEL-14S	14	27	19	40	75	22	35	M22 x 1.5
PN-400	DDEL-16S	16	30	24	43	79	24.5	36.5	M24 x 1.5
	DDEL-20S	20	36	27	48	93	26.5	44.5	M30 x 2
	DDEL-25S	25	46	36	54	104	30	50	M36 x 2
	DDEL-30S	30	50	41	62	117	35.5	55	M42 x 2
PN-315	DDEL-38S	38	60	50	72	135	41	63	M52 x 2

Dimensions given approximate length with tightened nut. All dimensions are in millimeters, for reference only subject to change. Without male stud, but with pre-settled nut and cutting ring for connection.
**O-ring of NBR (e.g. PERBUNAN®) Standard, of FPM (e.g. VITON®) on request.*

Standpipe Reducer

DDKOR

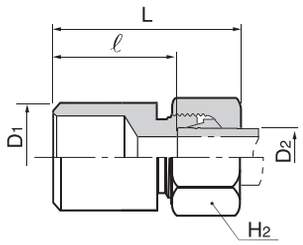

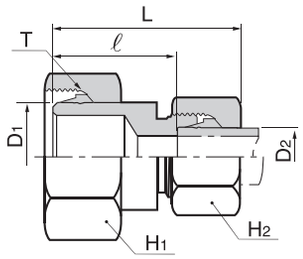

**Option*

Series	Part No.	Tube O.D D_1	Tube O.D D_2	H_1	H_2	L	ℓ	T
L PN-315	DDKOR-08L-06L	8	6	17	14	38	23.5	M14 x 1.5
	DDKOR-10L-06L	10	6	19	14	38	23.5	M16 x 1.5
	DDKOR-10L-08L	10	8	19	17	38	23.5	M16 x 1.5
	DDKOR-12L-06L	12	6	22	14	38	23.5	M18 x 1.5
	DDKOR-12L-08L	12	8	22	17	38	23.5	M18 x 1.5
	DDKOR-12L-10L	12	10	22	19	39	24.5	M18 x 1.5
	DDKOR-15L-06L	15	6	27	14	38	23.5	M22 x 1.5
	DDKOR-15L-08L	15	8	27	17	38	23.5	M22 x 1.5
	DDKOR-15L-10L	15	10	27	19	39	24.5	M22 x 1.5
	DDKOR-15L-12L	15	12	27	22	39	24.5	M22 x 1.5
	DDKOR-18L-06L	18	6	32	14	39	24.5	M26 x 1.5
	DDKOR-18L-08L	18	8	32	17	39	24.5	M26 x 1.5
	DDKOR-18L-10L	18	10	32	19	40	25.5	M26 x 1.5
	DDKOR-18L-12L	18	12	32	22	40	25.5	M26 x 1.5
	DDKOR-18L-15L	18	15	32	27	42	26.5	M26 x 1.5
PN-160	DDKOR-22L-06L	22	6	36	14	40	25.5	M30 x 2
	DDKOR-22L-08L	22	8	36	17	40	25.5	M30 x 2
	DDKOR-22L-10L	22	10	36	19	41	26.5	M30 x 2
	DDKOR-22L-12L	22	12	36	22	41	26.5	M30 x 2
	DDKOR-22L-15L	22	15	36	27	43	27.5	M30 x 2
	DDKOR-22L-18L	22	18	36	32	43	27	M30 x 2
	DDKOR-28L-06L	28	6	41	14	41	26.5	M36 x 2
	DDKOR-28L-08L	28	8	41	17	41	26.5	M36 x 2
	DDKOR-28L-10L	28	10	41	19	42	27.5	M36 x 2
	DDKOR-28L-12L	28	12	41	22	42	27.5	M36 x 2
	DDKOR-28L-15L	28	15	41	27	44	28.5	M36 x 2
	DDKOR-28L-18L	28	18	41	32	44	28	M36 x 2
	DDKOR-28L-22L	28	22	41	36	46	30	M36 x 2
	DDKOR-35L-06L	35	6	50	14	46	31.5	M45 x 2
	DDKOR-35L-08L	35	8	50	17	46	31.5	M45 x 2
	DDKOR-35L-10L	35	10	50	19	47	32.5	M45 x 2
	DDKOR-35L-12L	35	12	50	22	47	32.5	M45 x 2
	DDKOR-35L-15L	35	15	50	27	49	33.5	M45 x 2
	DDKOR-35L-18L	35	18	50	32	49	33	M45 x 2
	DDKOR-35L-22L	35	22	50	36	51	35	M45 x 2
	DDKOR-35L-28L	35	28	50	41	52	35	M45 x 2
	DDKOR-42L-10L	42	10	60	19	48	33.5	M52 x 2
	DDKOR-42L-12L	42	12	60	22	48	33.5	M52 x 2
	DDKOR-42L-15L	42	15	60	27	50	34.5	M52 x 2
	DDKOR-42L-18L	42	18	60	32	50	34	M52 x 2
	DDKOR-42L-22L	42	22	60	36	52	36	M52 x 2
	DDKOR-42L-28L	42	28	60	41	53	36	M52 x 2
	DDKOR-42L-35L	42	35	60	50	57	35	M52 x 2

Standpipe Reducer

DDKOR

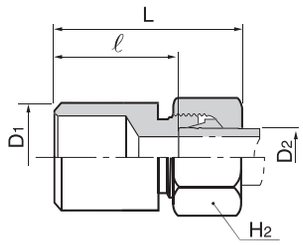

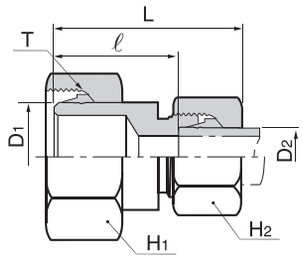

**Option*

Series	Part No.	Tube O.D D_1	Tube O.D D_2	H_1	H_2	L	ℓ	T
S PN-630	DDKOR-08S-06S	8	6	19	17	40	25	M16 x 1.5
	DDKOR-10S-06S	10	6	22	17	41	26	M18 x 1.5
	DDKOR-10S-08S	10	8	22	19	41	26	M18 x 1.5
	DDKOR-12S-06S	12	6	24	17	42	27	M20 x 1.5
	DDKOR-12S-08S	12	8	24	19	42	27	M20 x 1.5
	DDKOR-12S-10S	12	10	24	22	43	26.5	M20 x 1.5
	DDKOR-14S-06S	14	6	27	17	44	29	M22 x 1.5
	DDKOR-14S-08S	14	8	27	19	44	29	M22 x 1.5
	DDKOR-14S-10S	14	10	27	22	45	28.5	M22 x 1.5
	DDKOR-14S-12S	14	12	27	24	45	28.5	M22 x 1.5
PN-400	DDKOR-16S-06S	16	6	30	17	44	29	M24 x 1.5
	DDKOR-16S-08S	16	8	30	19	44	29	M24 x 1.5
	DDKOR-16S-10S	16	10	30	22	45	28.5	M24 x 1.5
	DDKOR-16S-12S	16	12	30	24	45	28.5	M24 x 1.5
	DDKOR-16S-14S	16	14	30	27	48	30	M24 x 1.5
	DDKOR-20S-06S	20	6	36	17	49	34	M30 x 2
	DDKOR-20S-08S	20	8	36	19	49	34	M30 x 2
	DDKOR-20S-10S	20	10	36	22	50	33.5	M30 x 2
	DDKOR-20S-12S	20	12	36	24	50	33.5	M30 x 2
	DDKOR-20S-14S	20	14	36	27	53	35	M30 x 2
	DDKOR-20S-16S	20	16	36	30	53	34.5	M30 x 2
	DDKOR-25S-06S	25	6	46	17	52	37	M36 x 2
	DDKOR-25S-08S	25	8	46	19	52	37	M36 x 2
	DDKOR-25S-10S	25	10	46	22	53	36.5	M36 x 2
	DDKOR-25S-12S	25	12	46	24	53	36.5	M36 x 2
	DDKOR-25S-14S	25	14	46	27	55	37	M36 x 2
	DDKOR-25S-16S	25	16	46	30	55	36.5	M36 x 2
	DDKOR-25S-20S	25	20	46	36	59	37.5	M36 x 2
	DDKOR-30S-06S	30	6	50	17	54	39	M42 x 2
	DDKOR-30S-08S	30	8	50	19	54	39	M42 x 2
	DDKOR-30S-10S	30	10	50	22	55	38.5	M42 x 2
	DDKOR-30S-12S	30	12	50	24	55	38.5	M42 x 2
	DDKOR-30S-14S	30	14	50	27	58	40	M42 x 2
	DDKOR-30S-16S	30	16	50	30	58	39.5	M42 x 2
	DDKOR-30S-20S	30	20	50	36	61	39.5	M42 x 2
	DDKOR-30S-25S	30	25	50	46	64	40	M42 x 2
PN-315	DDKOR-38S-06S	38	6	60	17	58	43	M52 x 2
	DDKOR-38S-08S	38	8	60	19	58	43	M52 x 2
	DDKOR-38S-10S	38	10	60	22	59	42.5	M52 x 2
	DDKOR-38S-12S	38	12	60	24	59	42.5	M52 x 2
	DDKOR-38S-14S	38	14	60	27	62	44	M52 x 2
	DDKOR-38S-16S	38	16	60	30	62	43.5	M52 x 2
	DDKOR-38S-20S	38	20	60	36	65	43.5	M52 x 2
	DDKOR-38S-25S	38	25	60	46	68	44	M52 x 2
	DDKOR-38S-30S	38	30	60	50	71	44.5	M52 x 2

Dimensions given approximate length with tightened nut. All dimensions are in millimeters, for reference only subject to change.
****Option : Preswaging nut and cutting ring - DDKOR-08S-06S-PS-S6***

Reducer

DDR

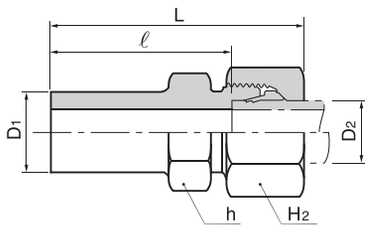

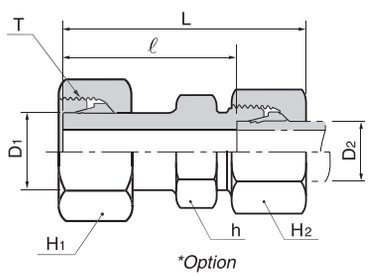

Series	Part No.	Tube O.D D_1	Tube O.D D_2	H_1	H_2	h	L	ℓ	T
L PN-315	DDR-08L-06L	8	6	17	14	14	40	25.5	M14 x 1.5
	DDR-10L-06L	10	6	19	14	14	42	27.5	M16 x 1.5
	DDR-10L-08L	10	8	19	17	17	43	27.5	M16 x 1.5
	DDR-12L-06L	12	6	22	14	14	42	27.5	M18 x 1.5
	DDR-12L-08L	12	8	22	17	17	43	27.5	M18 x 1.5
	DDR-12L-10L	12	10	22	19	17	44	28.5	M18 x 1.5
	DDR-15L-06L	15	6	27	14	17	44	29	M22 x 1.5
	DDR-15L-08L	15	8	27	17	17	44	29	M22 x 1.5
	DDR-15L-10L	15	10	27	19	17	45	30	M22 x 1.5
	DDR-15L-12L	15	12	27	22	19	45	30	M22 x 1.5
	DDR-18L-06L	18	6	32	14	19	46	31	M26 x 1.5
	DDR-18L-08L	18	8	32	17	19	46	31	M26 x 1.5
	DDR-18L-10L	18	10	32	19	19	47	32	M26 x 1.5
	DDR-18L-12L	18	12	32	22	19	47	32	M26 x 1.5
	DDR-18L-15L	18	15	32	27	24	49	33	M26 x 1.5
PN-160	DDR-22L-06L	22	6	36	14	24	48	33	M30 x 2
	DDR-22L-08L	22	8	36	17	24	48	33	M30 x 2
	DDR-22L-10L	22	10	36	19	24	49	34	M30 x 2
	DDR-22L-12L	22	12	36	22	24	49	34	M30 x 2
	DDR-22L-15L	22	15	36	27	24	51	35	M30 x 2
	DDR-22L-18L	22	18	36	32	27	52	34.5	M30 x 2
	DDR-28L-06L	28	6	41	14	30	48	33	M36 x 2
	DDR-28L-08L	28	8	41	17	30	48	33	M36 x 2
	DDR-28L-10L	28	10	41	19	30	50	34	M36 x 2
	DDR-28L-12L	28	12	41	22	30	50	34	M36 x 2
	DDR-28L-15L	28	15	41	27	30	52	35	M36 x 2
	DDR-28L-18L	28	18	41	32	30	53	36	M36 x 2
	DDR-28L-22L	28	22	41	36	32	57	36.5	M36 x 2
	DDR-35L-06L	35	6	50	14	36	53	38.5	M45 x 2
	DDR-35L-08L	35	8	50	17	36	53	38.5	M45 x 2
	DDR-35L-10L	35	10	50	19	36	55	39.5	M45 x 2
	DDR-35L-12L	35	12	50	22	36	55	39.5	M45 x 2
	DDR-35L-15L	35	15	50	27	36	58	40.5	M45 x 2
	DDR-35L-18L	35	18	50	32	36	58	40	M45 x 2
	DDR-35L-22L	35	22	50	36	36	62	42	M45 x 2
	DDR-35L-28L	35	28	50	41	36	63	42	M45 x 2
	DDR-42L-06L	42	6	60	14	46	56	41	M52 x 2
	DDR-42L-08L	42	8	60	17	46	56	41	M52 x 2
	DDR-42L-10L	42	10	60	19	46	58	42	M52 x 2
	DDR-42L-12L	42	12	60	22	46	58	42	M52 x 2
	DDR-42L-15L	42	15	60	27	46	60	43	M52 x 2
	DDR-42L-18L	42	18	60	32	46	60	42.5	M52 x 2
	DDR-42L-22L	42	22	60	36	46	62	44.5	M52 x 2
	DDR-42L-28L	42	28	60	41	46	64	44.5	M52 x 2
	DDR-42L-35L	42	35	60	50	46	67	43.5	M52 x 2

Reducer

DDR

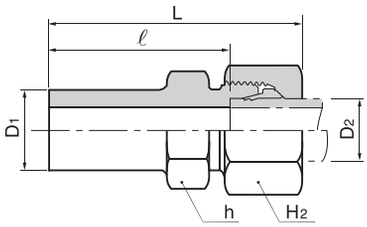

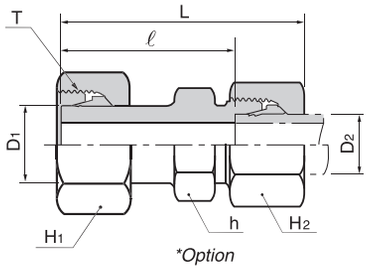

Series	Part No.	Tube O.D D_1	Tube O.D D_2	H_1	H_2	h	L	ℓ	T
S PN-630	DDR-08S-06S	8	6	19	17	17	43	28	M16 x 1.5
	DDR-10S-06S	10	6	22	17	17	45	30.5	M18 x 1.5
	DDR-10S-08S	10	8	22	19	17	45	30.5	M18 x 1.5
	DDR-12S-06S	12	6	24	17	17	47	32.5	M20 x 1.5
	DDR-12S-08S	12	8	24	19	17	47	32.5	M20 x 1.5
	DDR-12S-10S	12	10	24	22	19	48	32	M20 x 1.5
	DDR-14S-06S	14	6	27	17	17	51	36.5	M22 x 1.5
	DDR-14S-08S	14	8	27	19	17	51	36.5	M22 x 1.5
	DDR-14S-10S	14	10	27	22	19	52	36	M22 x 1.5
	DDR-14S-12S	14	12	27	24	24	52	36	M22 x 1.5
PN-400	DDR-16S-06S	16	6	30	17	17	53	38.5	M24 x 1.5
	DDR-16S-08S	16	8	30	19	17	53	38.5	M24 x 1.5
	DDR-16S-10S	16	10	30	22	19	54	38	M24 x 1.5
	DDR-16S-12S	16	12	30	24	22	55	38.5	M24 x 1.5
	DDR-16S-14S	16	14	30	27	24	57	39.5	M24 x 1.5
	DDR-20S-06S	20	6	36	17	22	58	43	M30 x 2
	DDR-20S-08S	20	8	36	19	22	58	43	M30 x 2
	DDR-20S-10S	20	10	36	22	22	59	42.5	M30 x 2
	DDR-20S-12S	20	12	36	24	22	59	42.5	M30 x 2
	DDR-20S-14S	20	14	36	27	24	62	44	M30 x 2
	DDR-20S-16S	20	16	36	30	27	62	43.5	M30 x 2
	DDR-25S-06S	25	6	46	17	27	62	47.5	M36 x 2
	DDR-25S-08S	25	8	46	19	27	62	47.5	M36 x 2
	DDR-25S-10S	25	10	46	22	27	63	47	M36 x 2
	DDR-25S-12S	25	12	46	24	27	63	47	M36 x 2
	DDR-25S-14S	25	14	46	27	27	66	48.5	M36 x 2
	DDR-25S-16S	25	16	46	30	27	66	48	M36 x 2
	DDR-25S-20S	25	20	46	36	32	70	48	M36 x 2
	DDR-30S-06S	30	6	50	17	32	67	52	M42 x 2
	DDR-30S-08S	30	8	50	19	32	67	52	M42 x 2
	DDR-30S-10S	30	10	50	22	32	68	51.5	M42 x 2
	DDR-30S-12S	30	12	50	24	32	68	51.5	M42 x 2
	DDR-30S-14S	30	14	50	27	32	71	53	M42 x 2
	DDR-30S-16S	30	16	50	30	32	71	52.5	M42 x 2
	DDR-30S-20S	30	20	50	36	32	74	52.5	M42 x 2
	DDR-30S-25S	30	25	50	46	41	77	53	M42 x 2
PN-315	DDR-38S-06S	38	6	60	17	41	72	57	M52 x 2
	DDR-38S-08S	38	8	60	19	41	72	57	M52 x 2
	DDR-38S-10S	38	10	60	22	41	73	56.5	M52 x 2
	DDR-38S-12S	38	12	60	24	41	73	56.5	M52 x 2
	DDR-38S-14S	38	14	60	27	41	76	58	M52 x 2
	DDR-38S-16S	38	16	60	30	41	76	57.5	M52 x 2
	DDR-38S-20S	38	20	60	36	41	79	57.5	M52 x 2
	DDR-38S-25S	38	25	60	46	41	82	58	M52 x 2
	DDR-38S-30S	38	30	60	50	46	89	58.5	M52 x 2

Dimensions given approximate length with tightened nut. All dimensions are in millimeters, for reference only subject to change. Without male stud, but with pre-settled nut and cutting ring for connection.
****Option : Preswaging nut and cutting ring - DDR-08S-06S-PS-S6***

Swivel Reducing Adaptor with Cone

DDRED

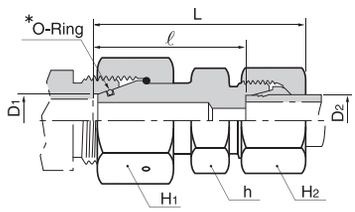

Series	Part No.	Tube O.D		H_1	H_2	h	L	ℓ
		D_1	D_2					
L PN-315	DDRED-08L-06L	8	6	17	14	14	39	24.5
	DDRED-10L-06L	10	6	19	14	17	39.5	24.5
	DDRED-10L-08L	10	8	19	17	17	39.5	24.5
	DDRED-12L-06L	12	6	22	14	17	40	25
	DDRED-12L-08L	12	8	22	17	17	40	25
	DDRED-12L-10L	12	10	22	19	17	41	26
	DDRED-15L-06L	15	6	27	14	22	42	27.5
	DDRED-15L-08L	15	8	27	17	22	42	27.5
	DDRED-15L-10L	15	10	27	19	22	43	28.5
	DDRED-15L-12L	15	12	27	22	22	43	28.5
	DDRED-18L-06L	18	6	32	14	24	43	28
	DDRED-18L-08L	18	8	32	17	24	43	28
	DDRED-18L-10L	18	10	32	19	24	44.5	29.5
	DDRED-18L-12L	18	12	32	22	24	44.5	29.5
	DDRED-18L-15L	18	15	32	27	24	45.5	30.5
PN-160	DDRED-22L-06L	22	6	36	14	28.5	47	32
	DDRED-22L-08L	22	8	36	17	28.5	47	32
	DDRED-22L-10L	22	10	36	19	28.5	48	33
	DDRED-22L-12L	22	12	36	22	28.5	48	33
	DDRED-22L-15L	22	15	36	27	28.5	49	34
	DDRED-22L-18L	22	18	36	32	28.5	50	33.5
	DDRED-28L-06L	28	6	41	14	36	49	34
	DDRED-28L-08L	28	8	41	17	36	49	34
	DDRED-28L-10L	28	10	41	19	36	50	35
	DDRED-28L-12L	28	12	41	22	36	50	35
	DDRED-28L-15L	28	15	41	27	36	51	36
	DDRED-28L-18L	28	18	41	32	36	52	35.5
	DDRED-28L-22L	28	22	41	36	36	54	37.5
	DDRED-35L-06L	35	6	50	14	46	55	40
	DDRED-35L-08L	35	8	50	17	46	55	40
	DDRED-35L-10L	35	10	50	19	46	56	41
	DDRED-35L-12L	35	12	50	22	46	56	41
	DDRED-35L-15L	35	15	50	27	46	57	42
	DDRED-35L-18L	35	18	50	32	46	58	41.5
	DDRED-35L-22L	35	22	50	36	46	60	43.5
	DDRED-35L-28L	35	28	50	41	46	60	43.5
	DDRED-42L-06L	42	6	60	14	50	55	40.5
	DDRED-42L-08L	42	8	60	17	50	55	40.5
	DDRED-42L-10L	42	10	60	19	50	56	41.5
	DDRED-42L-12L	42	12	60	22	50	56	41.5
	DDRED-42L-15L	42	15	60	27	50	58	42.5
	DDRED-42L-18L	42	18	60	32	50	58	42
	DDRED-42L-22L	42	22	60	36	50	60	44
	DDRED-42L-28L	42	28	60	60	50	61	44
	DDRED-42L-35L	42	35	60	60	50	65	43

Swivel Reducing Adaptor with Cone

DDRED

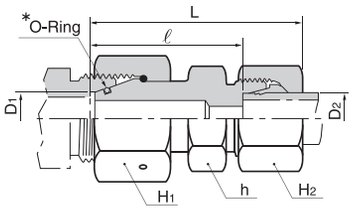

Series	Part No.	Tube O.D D_1	Tube O.D D_2	H_1	H_2	h	L	ℓ
S PN-630	DDRED-08S-06S	8	6	19	17	17	44	28
	DDRED-10S-06S	10	6	22	17	17	44	29.5
	DDRED-10S-08S	10	8	22	19	17	44	29.5
	DDRED-12S-06S	12	6	24	17	19	45	30
	DDRED-12S-08S	12	8	24	19	19	45	30
	DDRED-12S-10S	12	10	24	22	19	46	29.5
	DDRED-14S-06S	14	6	27	17	22	47.5	33
	DDRED-14S-08S	14	8	27	19	22	47.5	33
	DDRED-14S-10S	14	10	27	22	22	48.5	32.5
	DDRED-14S-12S	14	12	27	24	22	48.5	32.5
PN-400	DDRED-16S-06S	16	6	30	17	24	50	35
	DDRED-16S-08S	16	8	30	19	24	50	35
	DDRED-16S-10S	16	10	30	22	24	51	34.5
	DDRED-16S-12S	16	12	30	24	24	51	34.5
	DDRED-16S-14S	16	14	30	27	24	54	36
	DDRED-20S-06S	20	6	36	17	28.5	54	39
	DDRED-20S-08S	20	8	36	19	28.5	54	39
	DDRED-20S-10S	20	10	36	22	28.5	55	38.5
	DDRED-20S-12S	20	12	36	24	28.5	55	38.5
	DDRED-20S-14S	20	14	36	27	28.5	58	40
	DDRED-20S-16S	20	16	36	30	28.5	58	39.5
	DDRED-25S-06S	25	6	46	17	36	58	43.5
	DDRED-25S-08S	25	8	46	19	36	58	43.5
	DDRED-25S-10S	25	10	46	22	36	59	43
	DDRED-25S-12S	25	12	46	24	36	59	43
	DDRED-25S-14S	25	14	46	27	36	62	44.5
	DDRED-25S-16S	25	16	46	30	36	62	44
	DDRED-25S-20S	25	20	46	36	36	66	44
	DDRED-30S-06S	30	6	50	17	41	66	51
	DDRED-30S-08S	30	8	50	19	41	66	51
	DDRED-30S-10S	30	10	50	22	41	67	50.5
	DDRED-30S-12S	30	12	50	24	41	67	50.5
	DDRED-30S-14S	30	14	50	27	41	70	52
	DDRED-30S-16S	30	16	50	30	41	70	51.5
	DDRED-30S-20S	30	20	50	36	41	73	51.5
	DDRED-30S-25S	30	25	50	46	41	76	52
PN-315	DDRED-38S-06S	38	6	60	17	50	70.5	56
	DDRED-38S-08S	38	8	60	19	50	70.5	56
	DDRED-38S-10S	38	10	60	22	50	71.5	55.5
	DDRED-38S-12S	38	12	60	24	50	71.5	55.5
	DDRED-38S-14S	38	14	60	27	50	74.5	57
	DDRED-38S-16S	38	16	60	30	50	74.5	56.5
	DDRED-38S-20S	38	20	60	36	50	78.5	56.5
	DDRED-38S-25S	38	25	60	46	50	81.5	57
	DDRED-38S-30S	38	30	60	50	50	85.5	58.5

Dimensions given approximate length with tightened nut. All dimensions are in millimeters, for reference only subject to change. Without male stud, but supplied with fitted O-Ring for connection.
****O-ring of NBR (e.g. PERBUNAN®) Standard, of FPM (e.g. VITON®) on request.***

Swivel Union with Cone

DDUE

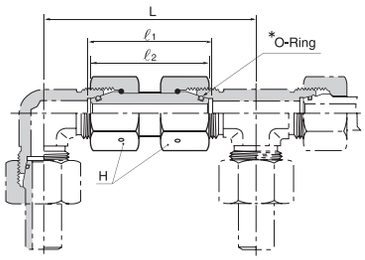

Series	Part No.	Tube O.D	H	L	ℓ_1	ℓ_2
L PN-500	DDUE-06L	6	17	64	36	34
	DDUE-08L	8	17	64	36	34
	DDUE-10L	10	19	67	37	36
PN-400	DDUE-12L	12	22	71	37	36
	DDUE-15L	15	27	82	40	39
	DDUE-18L	18	32	89.5	42.5	40.5
PN-250	DDUE-22L	22	36	102	47	45
	DDUE-28L	28	46	110	49	47
	DDUE-35L	35	50	127	58	53
	DDUE-42L	42	60	139	59	53
S PN-800	DDUE-06S	6	17	71	39	37
	DDUE-08S	8	19	73	39	37
	DDUE-10S	10	22	78	43	41
PN-630	DDUE-12S	12	24	87	44	43
	DDUE-14S	14	27	92	48	45
	DDUE-16S	16	30	99	50	46
PN-400	DDUE-20S	20	36	113	60	55
	DDUE-25S	25	46	126	66	58
	DDUE-30S	30	50	144	73	62
	DDUE-38S	38	60	165	83	67

Dimensions given approximate length with tightened nut. All dimensions are in millimeters, for reference only subject to change.
****O-ring of NBR (e.g. PERBUNAN®) Standard, of FPM (e.g. VITON®) on request.***

Adaptor
*(BSP Parallel) with *ED-Ring*

DDA-GED

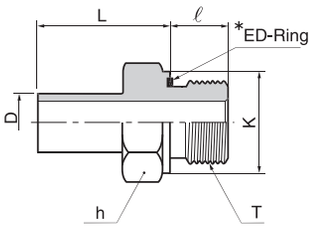

From E stud end

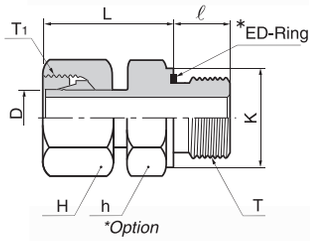

Series	Part No.	Tube O.D	H	h	K	L	ℓ	T	T_1
L PN-315	DDA-06L-01GED	6	14	14	13.9	24.5	8	PF 1/8	M12 x 1.5
	DDA-08L-02GED	8	17	19	18.9	29.5	12	PF 1/4	M14 x 1.5
	DDA-10L-02GED	10	19	19	18.9	27.5	12	PF 1/4	M16 x 1.5
	DDA-12L-03GED	12	22	22	21.9	34	12	PF 3/8	M18 x 1.5
	DDA-15L-04GED	15	27	27	26.9	32	14	PF 1/2	M22 x 1.5
	DDA-18L-04GED	18	32	27	26.9	31.5	14	PF 1/2	M26 x 1.5
PN-160	DDA-22L-06GED	22	36	32	31.9	32.5	16	PF 3/4	M30 x 2
	DDA-28L-08GED	28	41	41	39.9	35	18	PF 1	M36 x 2
	DDA-35L-10GED	35	50	50	49.9	42.5	20	PF 1-1/4	M45 x 2
	DDA-42L-12GED	42	60	55	54.9	46.5	22	PF 1-1/2	M52 x 2
S PN-630	DDA-06S-02GED	6	17	19	18.9	27	12	PF 1/4	M14 x 1.5
	DDA-08S-02GED	8	19	19	18.9	29.5	12	PF 1/4	M16 x 1.5
	DDA-10S-03GED	10	22	22	21.9	32	12	PF 3/8	M18 x 1.5
	DDA-12S-03GED	12	24	22	21.9	34	12	PF 3/8	M20 x 1.5
	DDA-12S-04GED	12	24	27	26.9	34.5	14	PF 1/2	M20 x 1.5
	DDA-14S-04GED	14	27	27	26.9	36.5	14	PF 1/2	M22 x 1.5
PN-400	DDA-16S-04GED	16	30	27	26.9	37	14	PF 1/2	M24 x 1.5
	DDA-16S-06GED	16	30	32	31.9	39	16	PF 3/4	M24 x 1.5
	DDA-20S-06GED	20	36	32	31.9	43	16	PF 3/4	M30 x 2
	DDA-25S-08GED	25	46	41	39.9	48	18	PF 1	M36 x 2
	DDA-30S-10GED	30	50	50	49.9	51	20	PF 1-1/4	M42 x 2
PN-315	DDA-38S-12GED	38	60	55	54.9	60	22	PF 1-1/2	M52 x 2

Adaptor
*(Metric Parallel) with *ED-Ring*

DDA-MED

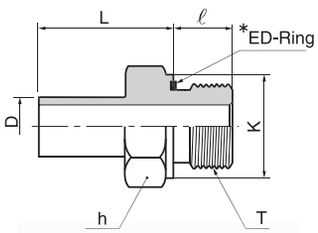

From E stud end

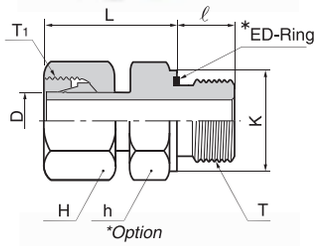

Series	Part No.	Tube O.D	H	h	K	L	ℓ	T	T_1
L PN-315	DDA-06L-M10ED	6	14	14	13.9	24.5	8	M10 x 1	M12 x 1.5
	DDA-08L-M12ED	8	17	17	16.9	26.5	12	M12 x 1.5	M14 x 1.5
	DDA-10L-M14ED	10	19	19	18.9	27.5	12	M14 x 1.5	M16 x 1.5
	DDA-12L-M16ED	12	22	22	21.9	30.5	12	M16 x 1.5	M18 x 1.5
	DDA-15L-M18ED	15	27	24	23.9	31.5	12	M18 x 1.5	M22 x 1.5
	DDA-18L-M22ED	18	32	27	26.9	31.5	14	M22 x 1.5	M26 x 1.5
PN-160	DDA-22L-M26ED	22	36	32	31.9	32.5	16	M26 x 1.5	M30 x 2
	DDA-28L-M23ED	28	41	41	39.9	35	18	M33 x 2	M36 x 2
	DDA-35L-M42ED	35	50	50	49.9	42.5	20	M42 x 2	M45 x 2
	DDA-42L-M48ED	42	60	55	54.9	46.5	22	M48 x 2	M52 x 2
S PN-630	DDA-06S-M12ED	6	17	17	16.9	27	12	M12 x 1.5	M14 x 1.5
	DDA-08S-M14ED	8	19	19	18.9	29.5	12	M14 x 1.5	M16 x 1.5
	DDA-10S-M16ED	10	22	22	21.9	32	12	M16 x 1.5	M18 x 1.5
	DDA-12S-M18ED	12	24	24	23.9	34	12	M18 x 1.5	M20 x 1.5
	DDA-14S-M20ED	14	27	27	25.9	36.5	14	M20 x 1.5	M22 x 1.5
PN-400	DDA-16S-M22ED	16	30	27	26.9	37	14	M22 x 1.5	M24 x 1.5
	DDA-20S-M27ED	20	36	32	31.9	43	16	M27 x 2	M30 x 2
	DDA-25S-M33ED	25	46	41	39.9	48	18	M33 x 2	M36 x 2
	DDA-30S-M42ED	30	50	50	49.9	51	20	M42 x 2	M42 x 2
PN-315	DDA-38S-M48ED	38	60	55	54.9	60	22	M48 x 2	M52 x 2

Dimensions given approximate length with tightened nut. All dimensions are in millimeters, for reference only subject to change. Without male stud, but with pre-setted nut and cutting ring for connection.
****ED-ring of NBR (e.g. PERBUNAN®) Standard, of FPM (e.g. VITON®) on request.***
****Option : Preswaging nut and cutting ring - DDA-06S-02GED-PS-S6***

Swivel Adaptor
*(BSP Parallel) with *ED-Ring*

DDEGE-G

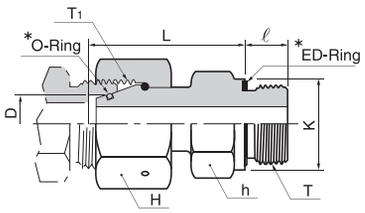

From E stud end

Series	Part No.	Tube O.D	H	h	K	L	ℓ	T	T_1
L PN-315	DDEGE-06L-01G	6	14	14	13.9	24.5	8	PF 1/8	M12 x 1.5
	DDEGE-08L-02G	8	17	19	18.9	29.5	12	PF 1/4	M14 x 1.5
	DDEGE-10L-02G	10	19	19	18.9	27.5	12	PF 1/4	M16 x 1.5
	DDEGE-12L-03G	12	22	22	21.9	34	12	PF 3/8	M18 x 1.5
	DDEGE-15L-04G	15	27	27	26.9	32	14	PF 1/2	M22 x 1.5
	DDEGE-18L-04G	18	32	27	26.9	31.5	14	PF 1/2	M26 x 1.5
PN-160	DDEGE-22L-06G	22	36	32	31.9	32.5	16	PF 3/4	M30 x 2
	DDEGE-28L-08G	28	41	41	39.9	35	18	PF 1	M36 x 2
	DDEGE-35L-10G	35	50	50	49.9	42.5	20	PF 1-1/4	M45 x 2
	DDEGE-42L-12G	42	60	55	54.9	46.5	22	PF 1-1/2	M52 x 2
S PN-630	DDEGE-06S-02G	6	17	19	18.9	27	12	PF 1/4	M14 x 1.5
	DDEGE-08S-02G	8	19	19	18.9	29.5	12	PF 1/4	M16 x 1.5
	DDEGE-10S-03G	10	22	22	21.9	32	12	PF 3/8	M18 x 1.5
	DDEGE-12S-03G	12	24	22	21.9	34	12	PF 3/8	M20 x 1.5
	DDEGE-14S-04G	14	27	27	26.9	36.5	14	PF 1/2	M22 x 1.5
PN-400	DDEGE-16S-04G	16	30	27	26.9	37	14	PF 1/2	M24 x 1.5
	DDEGE-20S-06G	20	36	32	31.9	43	16	PF 3/4	M30 x 2
	DDEGE-25S-08G	25	46	41	39.9	48	18	PF 1	M36 x 2
	DDEGE-30S-10G	30	50	50	49.9	51	20	PF 1-1/4	M42 x 2
PN-315	DDEGE-38S-12G	38	60	55	54.9	60	22	PF 1-1/2	M52 x 2

Swivel Adaptor
*(Metric Parallel) with *ED-Ring*

DDEGE-M

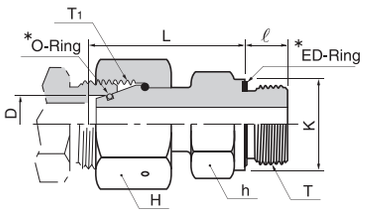

From E stud end

Series	Part No.	Tube O.D	H	h	K	L	ℓ	T	T_1
L PN-315	DDEGE-06L-M10	6	14	14	13.9	24.5	8	M10 x 1	M12 x 1.5
	DDEGE-08L-M12	8	17	17	16.9	26.5	12	M12 x 1.5	M14 x 1.5
	DDEGE-10L-M14	10	19	19	18.9	27.5	12	M14 x 1.5	M16 x 1.5
	DDEGE-12L-M16	12	22	22	21.9	30.5	12	M16 x 1.5	M18 x 1.5
	DDEGE-15L-M18	15	27	24	23.9	31.5	12	M18 x 1.5	M22 x 1.5
	DDEGE-18L-M22	18	32	27	26.9	31.5	14	M22 x 1.5	M26 x 1.5
PN-160	DDEGE-22L-M26	22	36	32	31.9	32.5	16	M26 x 1.5	M30 x 2
	DDEGE-28L-M23	28	41	41	39.9	35	18	M33 x 2	M36 x 2
	DDEGE-35L-M42	35	50	50	49.9	42.5	20	M42 x 2	M45 x 2
	DDEGE-42L-M48	42	60	55	54.9	46.5	22	M48 x 2	M52 x 2
S PN-630	DDEGE-06S-M12	6	17	17	16.9	27	12	M12 x 1.5	M14 x 1.5
	DDEGE-08S-M14	8	19	19	18.9	29.5	12	M14 x 1.5	M16 x 1.5
	DDEGE-10S-M16	10	22	22	21.9	32	12	M16 x 1.5	M18 x 1.5
	DDEGE-12S-M18	12	24	24	23.9	34	12	M18 x 1.5	M20 x 1.5
	DDEGE-14S-M20	14	27	27	25.9	36.5	14	M20 x 1.5	M22 x 1.5
PN-400	DDEGE-16S-M22	16	30	27	26.9	37	14	M22 x 1.5	M24 x 1.5
	DDEGE-20S-M27	20	36	32	31.9	43	16	M27 x 2	M30 x 2
	DDEGE-25S-M33	25	46	41	39.9	48	18	M33 x 2	M36 x 2
	DDEGE-30S-M42	30	50	50	49.9	51	20	M42 x 2	M42 x 2
PN-315	DDEGE-38S-M48	38	60	55	54.9	60	22	M48 x 2	M52 x 2

Dimensions given approximate length with tightened nut. All dimensions are in millimeters, for reference only subject to change. Without male stud, but supplied with fitted O-Ring for connection.
****O-ring and ED-ring of NBR (e.g. PERBUNAN®) Standard, of FPM (e.g. VITON®) on request.***

Banjo Fittings
(BSP/Metric Parallel) with DKA Ring

DDSWVE-G/M

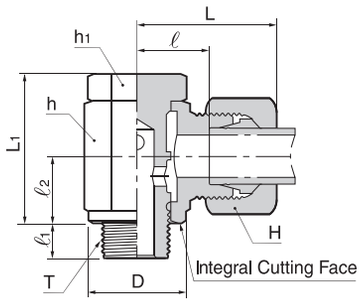

For Tube O.D up to 15mm

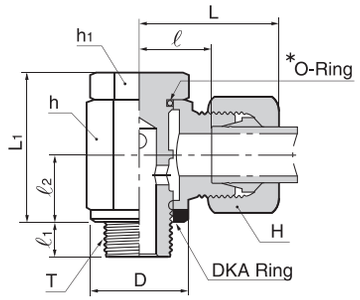

For Tube O.D up to 16mm and larger

Series	Part No.	Tube O.D	D	H	h	h_1	L	L_1	ℓ	$ℓ_1$	$ℓ_2$	T
L PN-160	DDSWVE-06L-01G	6	14	14	14	14	25	21	10.5	6	10	PF 1/8
	DDSWVE-08L-02G	8	18.5	17	19	19	28	27	13	9	13	PF 1/4
	DDSWVE-10L-02G	10	18.5	19	19	19	29	27	14	9	13	PF 1/4
PN-100	DDSWVE-12L-03G	12	22.5	22	22	22	30	32	15.5	9	15	PF 3/8
	DDSWVE-15L-04G	15	26.5	27	27	27	34	37.5	19	11	18	PF 1/2
	DDSWVE-18L-04G	18	26	32	30	27	37	44	20.5	11	21.5	PF 1/2
	DDSWVE-22L-06G	22	32	36	36	32	42	49	25.5	13	24	PF 3/4
S PN-160	DDSWVE-06S-02G	6	18.5	17	19	19	30	27	15	9	13	PF 1/4
	DDSWVE-08S-02G	8	18.5	19	19	19	30	27	15	9	13	PF 1/4
PN-100	DDSWVE-10S-03G	10	22.5	22	22	22	32	32	16	9	15	PF 3/8
	DDSWVE-12S-03G	12	22.5	24	24	24	33	37	17	9	18	PF 3/8
	DDSWVE-14S-04G	14	26.5	27	27	27	38	37	20	11	18	PF 1/2
	DDSWVE-16S-04G	16	26	30	30	27	40	44	21.5	11	21.5	PF 1/2
	DDSWVE-20S-06G	20	32	36	36	32	46	49	24.5	13	24	PF 3/4

Series	Part No.	Tube O.D	D	H	h	h_1	L	L_1	ℓ	$ℓ_1$	$ℓ_2$	T
L PN-160	DDSWVE-06L-M10	6	14.5	14	14	14	25	21.5	10.5	6	10	M10 x 1
	DDSWVE-08L-M12	8	17.5	17	17	17	27	12	12	9	12	M12 x 1.5
	DDSWVE-10L-M14	10	19.5	19	19	19	29	14	14	9	13	M14 x 1.5
PN-100	DDSWVE-12L-M16	12	21.5	22	22	22	30	15.5	15.5	9	15	M16 x 1.5
	DDSWVE-15L-M18	15	23.5	27	24	24	33	37.5	17.5	9	18	M18 x 1.5
	DDSWVE-18L-M22	18	27	32	30	37	37	44.0	20.5	11	21.5	M22 x 1.5
	DDSWVE-22L-M26	22	31	36	36	42	42	49.0	25.5	13	24	M26 x 1.5
S PN-100	DDSWVE-06S-M12	6	17.5	17	17	29	29	25.0	14	9	12	M12 x 1.5
	DDSWVE-08S-M14	8	19.5	19	19	30	30	27.0	15	9	13	M14 x 1.5
	DDSWVE-10S-M16	10	21.5	22	22	32	32	32.0	16	9	15	M16 x 1.5
	DDSWVE-12S-M18	12	23.5	24	24	33	33	37.0	17	9	18	M18 x 1.5
	DDSWVE-14S-M20	14	25.5	27	27	38	38	37.0	20	11	18	M20 x 1.5
	DDSWVE-16S-M22	16	27	30	30	40	40	44.0	21.5	11	21.5	M22 x 1.5
	DDSWVE-20S-M27	20	32	36	36	46	46	49.0	24.5	13	24	M27 x 2

Dimensions given approximate length with tightened nut. All dimensions are in millimeters, for reference only subject to change.
****O-ring of NBR (e.g. PERBUNAN®) Standard, of FPM (e.g. VITON®) on request.***

High Pressure Banjo Elbow (BSP/Metric Parallel) with DKA Ring

DDWH-G/M

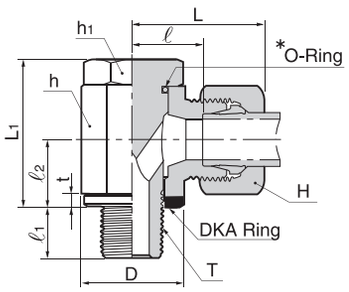

Series	Part No.	Tube O.D	D	H	h	h_1	L	L_1	ℓ	$ℓ_1$	$ℓ_2$	t	T
L PN-250	DDWH-06L-01G	6	14	14	17	17	27	24	12	8	10.5	2.5	PF 1/8
	DDWH-08L-02G	8	18	17	22	19	29	30	14.5	12	14	3	PF 1/4
	DDWH-10L-02G	10	18	19	22	19	30	30	15.5	12	14	3	PF 1/4
	DDWH-12L-03G	12	22	22	27	24	33	36	18	12	16.5	3	PF 3/8
	DDWH-15L-04G	15	26	27	32	30	37	45	21.5	14	21.5	4.5	PF 1/2
	DDWH-18L-04G	18	26	32	32	30	37	45	21	14	21.5	4.5	PF 1/2
PN-160	DDWH-22L-06G	22	32	36	41	36	44	53	27.5	16	24	3.5	PF 3/4
	DDWH-28L-08G	28	39	41	50	46	49	66	32	18	30.5	3.5	PF 1
	DDWH-35L-10G	35	49	50	60	55	58	76	36	20	35.5	3.5	PF 1-1/4
	DDWH-42L-12G	42	55	60	70	60	63	87	40.5	22	40.5	3.5	PF 1-1/2
S PN-315	DDWH-06S-02G	6	18	17	22	19	31	30	16.5	12	14	3	PF 1/4
	DDWH-08S-02G	8	18	19	22	19	31	30	16.5	12	14	3	PF 1/4
	DDWH-10S-03G	10	22	22	27	24	35	36	18.5	12	16.5	3	PF 3/8
	DDWH-12S-03G	12	22	24	27	24	35	36	18.5	12	16.5	3	PF 3/8
	DDWH-16S-04G	16	26	30	32	30	40	45	22	14	21.5	4.5	PF 1/2
PN-160	DDWH-20S-06G	20	32	36	41	36	48	53	26.5	16	24	3.5	PF 3/4
	DDWH-25S-08G	25	39	46	50	46	56	66	31.5	18	30.5	3.5	PF 1
	DDWH-30S-10G	30	49	50	60	55	64	76	37	20	34.5	3.5	PF 1-1/4
	DDWH-38S-12G	38	55	60	70	60	72	87	41.5	22	40.5	3.5	PF 1-1/2

Series	Part No.	Tube O.D	D	H	h	h_1	L	L_1	ℓ	$ℓ_1$	$ℓ_2$	t	T
L PN-250	DDWH-06L-M10	6	14	14	17	17	27	24	12	8	10.5	2.5	M10 x 1
	DDWH-08L-M12	8	17	17	22	19	29	30	14.5	12	14	3	M12 x 1.5
	DDWH-10L-M14	10	19	19	22	19	30	30	15.5	12	14	3	M14 x 1.5
	DDWH-12L-M16	12	21	22	27	24	33	36	18	12	16.5	3	M16 x 1.5
	DDWH-15L-M18	15	23	27	30	27	36	39.5	20.5	12	18.5	3	M18 x 1.5
	DDWH-18L-M22	18	27	32	32	30	37	45	21	14	21.5	4.5	M22 x 1.5
PN-160	DDWH-22L-M26	22	31	36	41	36	44	53	27.5	16	24	3.5	M26 x 1.5
	DDWH-28L-M23	28	39	41	50	46	49	66	32	18	30.5	3.5	M33 x 2
	DDWH-35L-M42	35	49	50	60	55	58	76	36	20	35.5	3.5	M42 x 2
	DDWH-42L-M48	42	55	60	70	60	63	87	40.5	22	40.5	3.5	M48 x 2
S PN-315	DDWH-06S-M12	6	17	17	22	19	31	30	16.5	12	14	3	M12 x 1.5
	DDWH-08S-M14	8	19	19	22	19	31	30	16.5	12	14	3	M14 x 1.5
	DDWH-10S-M16	10	21	22	27	24	35	36	18.5	12	16.5	3	M16 x 1.5
	DDWH-12S-M18	12	23	24	30	27	36	39.5	20	12	18.5	3	M18 x 1.5
	DDWH-16S-M22	16	27	30	32	30	40	45	22	14	21.5	4.5	M22 x 1.5
PN-160	DDWH-20S-M27	20	32	36	41	36	48	53	26.5	16	24	3.5	M27 x 2
	DDWH-25S-M33	25	39	46	50	46	56	66	31.5	18	30.5	3.5	M33 x 2
	DDWH-30S-M42	30	49	50	60	55	64	76	37	20	35.5	3.5	M42 x 2
	DDWH-38S-M48	38	55	60	70	60	72	87	41.5	22	40.5	3.5	M48 x 2

Dimensions given approximate length with tightened nut. All dimensions are in millimeters, for reference only subject to change.
****O-ring of NBR (e.g. PERBUNAN®) Standard, of FPM (e.g. VITON®) on request.***

High Pressure Banjo Tee
(BSP/Metric Parallel) with DKA Ring

DDTH-G/M

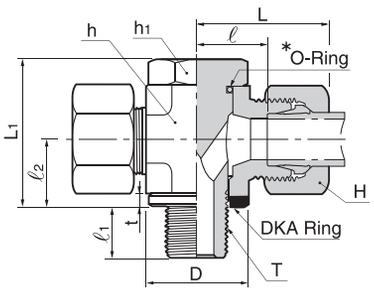

Series	Part No.	Tube O.D	D	H	h	h_1	L	L_1	ℓ	$ℓ_1$	$ℓ_2$	t	T
L PN-250	DDTH-06L-01G	6	14	14	17	17	27	24	12	8	10.5	2.5	PF 1/8
	DDTH-08L-02G	8	18	17	22	19	29	30	14.5	12	14	3	PF 1/4
	DDTH-10L-02G	10	18	19	22	19	30	30	15.5	12	14	3	PF 1/4
	DDTH-12L-03G	12	22	22	27	24	33	36	18	12	16.5	3	PF 3/8
	DDTH-15L-04G	15	26	27	32	30	37	45	21.5	14	21.5	4.5	PF 1/2
	DDTH-18L-04G	18	26	32	32	30	37	45	21	14	21.5	4.5	PF 1/2
PN-160	DDTH-22L-06G	22	32	36	41	36	44	53	27.5	16	24	3.5	PF 3/4
	DDTH-28L-08G	28	39	41	50	46	49	66	32	18	30.5	3.5	PF 1
	DDTH-35L-10G	35	49	50	60	55	58	76	36	20	35.5	3.5	PF 1-1/4
	DDTH-42L-12G	42	55	60	70	60	63	87	40.5	22	40.5	3.5	PF 1-1/2
S PN-315	DDTH-06S-02G	6	18	17	22	19	31	30	16.5	12	14	3	PF 1/4
	DDTH-08S-02G	8	18	19	22	19	31	30	16.5	12	14	3	PF 1/4
	DDTH-10S-03G	10	22	22	27	24	35	36	18.5	12	16.5	3	PF 3/8
	DDTH-12S-03G	12	22	24	27	24	35	36	18.5	12	16.5	3	PF 3/8
	DDTH-16S-04G	16	26	30	32	30	40	45	22	14	21.5	4.5	PF 1/2
PN-160	DDTH-20S-06G	20	32	36	41	36	48	53	26.5	16	24	3.5	PF 3/4
	DDTH-25S-08G	25	39	46	50	46	56	66	31.5	18	30.5	3.5	PF 1
	DDTH-30S-10G	30	49	50	60	55	64	76	37	20	34.5	3.5	PF 1-1/4
	DDTH-38S-12G	38	55	60	70	60	72	87	41.5	22	40.5	3.5	PF 1-1/2

Series	Part No.	Tube O.D	D	H	h	h_1	L	L_1	ℓ	$ℓ_1$	$ℓ_2$	t	T
L PN-250	DDTH-06L-M10	6	14	14	17	17	27	24	12	8	10.5	2.5	M10 x 1
	DDTH-08L-M12	8	17	17	22	19	29	30	14.5	12	14	3	M12 x 1.5
	DDTH-10L-M14	10	19	19	22	19	30	30	15.5	12	14	3	M14 x 1.5
	DDTH-12L-M16	12	21	22	27	24	33	36	18	12	16.5	3	M16 x 1.5
	DDTH-15L-M18	15	23	27	30	27	36	39.5	20.5	12	18.5	3	M18 x 1.5
	DDTH-18L-M22	18	27	32	32	30	37	45	21	14	21.5	4.5	M22 x 1.5
PN-160	DDTH-22L-M26	22	31	36	41	36	44	53	27.5	16	24	3.5	M26 x 1.5
	DDTH-28L-M23	28	39	41	50	46	49	66	32	18	30.5	3.5	M33 x 2
	DDTH-35L-M42	35	49	50	60	55	58	76	36	20	35.5	3.5	M42 x 2
	DDTH-42L-M48	42	55	60	70	60	63	87	40.5	22	40.5	3.5	M48 x 2
S PN-315	DDTH-06S-M12	6	17	17	22	19	31	30	16.5	12	14	3	M12 x 1.5
	DDTH-08S-M14	8	19	19	22	19	31	30	16.5	12	.14	3	M14 x 1.5
	DDTH-10S-M16	10	21	22	27	24	35	36	18.5	12	16.5	3	M16 x 1.5
	DDTH-12S-M18	12	23	24	30	27	36	39.5	20	12	18.5	3	M18 x 1.5
	DDTH-16S-M22	16	27	30	32	30	40	45	22	14	21.5	4.5	M22 x 1.5
PN-160	DDTH-20S-M27	20	32	36	41	36	48	53	26.5	16	24	3.5	M27 x 2
	DDTH-25S-M33	25	39	46	50	46	56	66	31.5	18	30.5	3.5	M33 x 2
	DDTH-30S-M42	30	49	50	60	55	64	76	37	20	35.5	3.5	M42 x 2
	DDTH-38S-M48	38	55	60	70	60	72	87	41.5	22	40.5	3.5	M48 x 2

Dimensions given approximate length with tightened nut. All dimensions are in millimeters, for reference only subject to change.
****O-ring of NBR (e.g. PERBUNAN®) Standard, of FPM (e.g. VITON®) on request.***

Pressure Gauge Connector (BSP Parallel) with DKI-Ring

DDGC-G

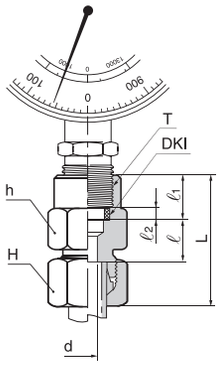

Series	Part No.	Tube O.D	d	H	h	L	ℓ	ℓ_1	ℓ_2	T
L PN-315	DDGC-06L-02G	6	2.5	14	19	37	7.5	14.5	4.5	PF 1/4
	DDGC-08L-02G	8	5.5	17	19	37	7.5	14.5	4.5	PF 1/4
	DDGC-10L-02G	10	5.5	19	19	38	8.5	14.5	4.5	PF 1/4
	DDGC-12L-02G	12	5.5	22	19	38	8.5	14.5	4.5	PF 1/4
S PN-630	DDGC-06S-04G	6	3.5	17	27	46	11	20	5	PF 1/2
	DDGC-08S-04G	8	3.5	19	27	46	11	20	5	PF 1/2
	DDGC-10S-04G	10	7	22	27	47	10.5	20	5	PF 1/2
	DDGC-12S-04G	12	7	24	27	47	10.5	20	5	PF 1/2

Dimensions given approximate length with tightened nut. All dimensions are in millimeters, for reference only subject to change.

Swivel Gauge Adaptor (BSP Parallel) with Cone and DKI-Ring

DDGE-G

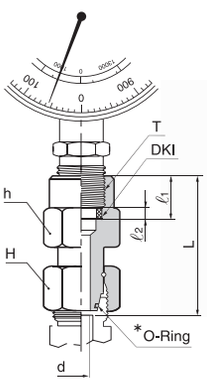

Series	Part No.	Tube O.D	d	H	h	L	ℓ_1	ℓ_2	T
L PN-315	DDGE-06L-02G	6	2.5	14	19	35.5	14.5	4.5	PF 1/4
	DDGE-08L-02G	8	4	17	19	35.5	14.5	4.5	PF 1/4
	DDGE-10L-02G	10	5.5	19	19	36	14.5	4.5	PF 1/4
	DDGE-12L-02G	12	5.5	22	19	36	14.5	4.5	PF 1/4
S PN-630	DDGE-06S-04G	6	2.5	17	27	42.5	20	5	PF 1/2
	DDGE-08S-04G	8	4	19	27	43	20	5	PF 1/2
	DDGE-10S-04G	10	6	22	27	43.5	20	5	PF 1/2
	DDGE-12S-04G	12	7	24	27	45	20	5	PF 1/2
	DDGE-06S-02G	6	2.5	17	19	35.5	14.5	4.5	PF 1/4
	DDGE-08S-02G	8	4	19	19	35.5	14.5	4.5	PF 1/4
	DDGE-10S-02G	10	6	22	19	36	14.5	4.5	PF 1/4
	DDGE-12S-02G	12	7	24	19	39	14.5	4.5	PF 1/4

Dimensions given approximate length with tightened nut. All dimensions are in millimeters, for reference only subject to change.
**O-ring of NBR (e.g. PERBUNAN®) Standard, of FPM (e.g. VITON®) on request.*

Pressure Gauge Connector (BSP Parallel) with Standpipe and DKI-Ring

DDGA-G

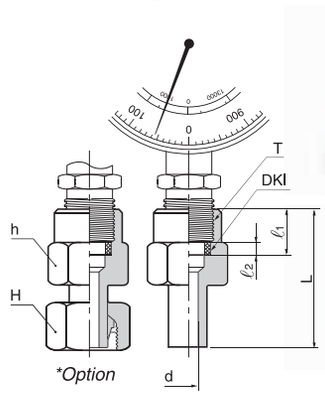

Series	Part No.	Tube O.D	d	H	h	L	ℓ_1	ℓ_2	T
L PN-315	DDGA-06L-02G	6	3.5	14	19	38	14.5	4.5	PF 1/4
	DDGA-08L-02G	8	5.5	17	19	38	14.5	4.5	PF 1/4
	DDGA-10L-02G	10	7.5	19	19	39.5	14.5	4.5	PF 1/4
	DDGA-12L-02G	12	9	22	19	40.5	14.5	4.5	PF 1/4
S PN-630	DDGA-06S-04G	6	3.5	17	27	45	20	5	PF 1/2
	DDGA-08S-04G	8	4.5	19	27	45	20	5	PF 1/2
	DDGA-10S-04G	10	6.5	22	27	47	20	5	PF 1/2
	DDGA12S-04G	12	7.5	24	27	47.5	20	5	PF 1/2

Dimensions given approximate length with tightened nut. All dimensions are in millimeters, for reference only subject to change.
**Option : Preswaging nut and cutting ring - DDGA-06S-04G-PS-S6*

Tee Test Couplinge
with threaded Connection
DDEMA3

DDGMA

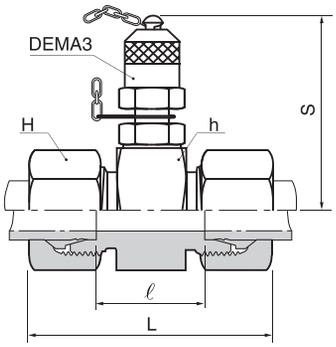

Series	Part No.	Tube O.D	H	h	L	ℓ	S
L PN-315	DDGMA3-06L	6	14	24	50	20.5	50
	DDGMA3-08L	8	17	24	50	20.5	50
	DDGMA3-10L	10	19	24	52	22.5	50
	DDGMA3-12L	12	22	24	52	22.5	50
	DDGMA3-15L	15	27	30	55	24.5	53
	DDGMA3-18L	18	32	32	56	23.5	54
PN-160	DDGMA3-22L	22	36	36	60	27.5	56
	DDGMA3-28L	28	41	41	61	27.5	58
	DDGMA3-35L	35	50	46	69	25.5	61
	DDGMA3-42L	42	60	55	70	24.5	65
S PN-630	DDGMA3-06S	6	17	24	54	24.5	50
	DDGMA3-08S	8	19	24	54	24.5	50
	DDGMA3-10S	10	22	24	56	23.5	50
	DDGMA3-12S	12	24	24	56	23.5	50
	DDGMA3-14S	14	27	27	62	26.5	51
PN-400	DDGMA3-16S	16	30	30	62	25.5	53
	DDGMA3-20S	20	36	36	69	25.5	56
	DDGMA3-25S	25	46	41	75	26.5	58
	DDGMA3-30S	30	50	46	81	27.5	61
PN-315	DDGMA3-38S	38	60	55	90	29	65

Dimensions given approximate length with tightened nut. All dimensions are in millimeters, for reference only subject to change.

Test Coupling
with threaded Connection

DDEMA3

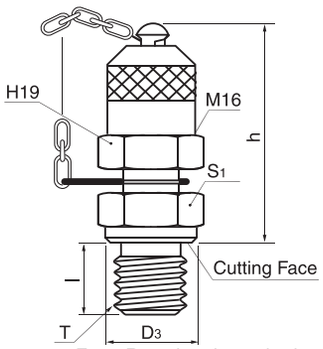

From B stud end standard
(From E stud end available)

Series	Part No.	D_3	h	l	S_1	T
PN-630	DDEMA3-01G	14	41	8	17	PF 1/8
	DDEMA3-02G	18	41	10	19	PF 1/4
	DDEMA3-03G	22	41	12	22	PF 3/8
	DDEMA3-04G	26	41	14	27	PF 1/2
	DDEMA3-M10	14	41	8	17	M10 x 1
	DDEMA3-M12	17	41	12	17	M12 x 1.5
	DDEMA3-M14	19	41	12	19	M14 x 1.5
	DDEMA3-M16	21	41	12	22	M16 x 1.5

Dimensions given approximate length with tightened nut. All dimensions are in millimeters, for reference only subject to change.

Welding Connector

DDAS

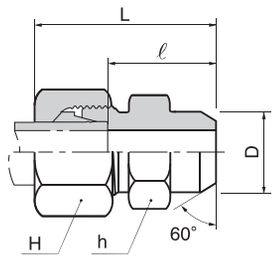

Series	Part No.	Tube O.D	D	H	h	L	ℓ
L PN-315	DDAS-06L	6	10	14	12	29	14
	DDAS-08L	8	12	17	14	31	16
	DDAS-10L	10	14	19	17	33	18
	DDAS-12L	12	16	22	19	33	18
	DDAS-15L	15	19	27	22	37	22
	DDAS-18L	18	22	32	27	40	23.5
PN-160	DDAS-22L	22	27	36	32	45	28.5
	DDAS-28L	28	32	41	41	47	30.5
	DDAS-35L	35	40	50	46	54	32.5
	DDAS-42L	42	46	60	55	58	35
S PN-630	DDAS-06S	6	11	17	14	34	19
	DDAS-08S	8	13	19	17	36	21
	DDAS-10S	10	15	22	19	39	22.5
	DDAS-12S	12	17	24	22	41	24.5
	DDAS-14S	14	19	27	24	45	27
PN-400	DDAS-16S	16	21	30	27	45	26.5
	DDAS-20S	20	26	36	32	51	29.5
	DDAS-25S	25	31	46	41	56	32
	DDAS-30S	30	36	50	46	62	35.5
PN-315	DDAS-38S	38	44	60	55	69	38

Dimensions given approx. length with tightened nut. All dimensions are in millimeters, for reference only subject to change.

Welding Connector with DAK

DDASK

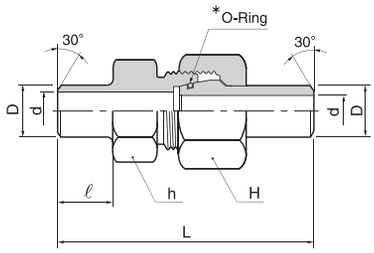

Pressure Rating	Part No.	Tube O.D	d	H	h	L	ℓ
PN-248	DDASK-10-1.0	10	8	22	19	58	10
PN-357	DDASK-10-1.5	10	7	22	19	58	10
PN-458	DDASK-10-2.0	10	6	22	19	58	10
PN-303	DDASK-12-1.5	12	9	24	22	65	15
PN-391	DDASK-12-2.0	12	8	24	22	65	15
PN-474	DDASK-12-2.5	12	7	24	22	65	15
PN-234	DDASK-16-1.5	16	13	30	27	74.5	16.5
PN-303	DDASK-16-2.0	16	12	30	27	74.5	16.5
PN-370	DDASK-16-2.5	16	11	30	27	74.5	16.5
PN-433	DDASK-16-3.0	16	10	30	27	74.5	16.5
PN-249	DDASK-20-2.0	20	16	36	32	84	19
PN-305	DDASK-20-2.5	20	15	36	32	84	19
PN-357	DDASK-20-3.0	20	14	36	32	84	19
PN-458	DDASK-20-4.0	20	12	36	32	84	19
PN-292	DDASK-25-3.0	25	19	46	41	94.5	19.5
PN-378	DDASK-25-4.0	25	17	46	41	94.5	19.5
PN-458	DDASK-25-5.0	25	15	46	41	94.5	19.5
PN-248	DDASK-30-3.0	30	24	50	46	102	23
PN-321	DDASK-30-4.0	30	22	50	46	102	23
PN-391	DDASK-30-5.0	30	20	50	46	102	23
PN-460	DDASK-30-6.0	30	18	50	46	102	23
PN-260	DDASK-38-4.0	38	30	60	55	111	23
PN-318	DDASK-38-5.0	38	28	60	55	111	23
PN-373	DDASK-38-6.0	38	26	60	55	111	23
PN-427	DDASK-38-7.0	38	24	60	55	111	23

Dimensions given approximate length with tightened nut. All dimensions are in millimeters, for reference only subject to change.
****O-ring of NBR (e.g. PERBUNAN®) Standard, of FPM (e.g. VITON®) on request.***

*Welding Nipple with *O-Ring*

DDAK

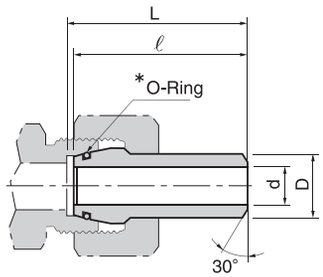

Pressure Rating	Part No.	Tube O.D	d	L	ℓ
PN-248	DDAK-10-1.0T	10	8	35.5	33
PN-357	DDAK-10-1.5T	10	7	35.5	33
PN-458	DDAK-10-2.0T	10	6	35.5	33
PN-303	DDAK-12-1.5T	12	9	35.5	33
PN-391	DDAK-12-2.0T	12	8	35.5	33
PN-474	DDAK-12-2.5T	12	7	35.5	33
PN-234	DDAK-16-1.5T	16	13	42.5	39
PN-303	DDAK-16-2.0T	16	12	42.5	39
PN-370	DDAK-16-2.5T	16	11	42.5	39
PN-433	DDAK-16-3.0T	16	10	42.5	39
PN-249	DDAK-20-2.0T	20	16	47.5	43.5
PN-305	DDAK-20-2.5T	20	15	47.5	43.5
PN-357	DDAK-20-3.0T	20	14	47.5	43.5
PN-458	DDAK-20-4.0T	20	12	47.5	43.5
PN-292	DDAK-25-3.0T	25	19	55	49.5
PN-378	DDAK-25-4.0T	25	17	55	49.5
PN-458	DDAK-25-5.0T	25	15	55	49.5
PN-248	DDAK-30-3.0T	30	24	58.5	51.5
PN-321	DDAK-30-4.0T	30	22	58.5	51.5
PN-391	DDAK-30-5.0T	30	20	58.5	51.5
PN-460	DDAK-30-6.0T	30	18	58.5	51.5
PN-260	DDAK-38-4.0T	38	30	66	56.5
PN-318	DDAK-38-5.0T	38	28	66	56.5
PN-373	DDAK-38-6.0T	38	26	66	56.5
PN-427	DDAK-38-7.0T	38	24	66	56.5

Dimensions given approximate length with tightened nut. All dimensions are in millimeters, for reference only subject to change.
****O-ring of NBR (e.g. PERBUNAN®) Standard, of FPM (e.g. VITON®) on request.***

*Reducing Welding Nipple with *O-Ring*

DDAKR

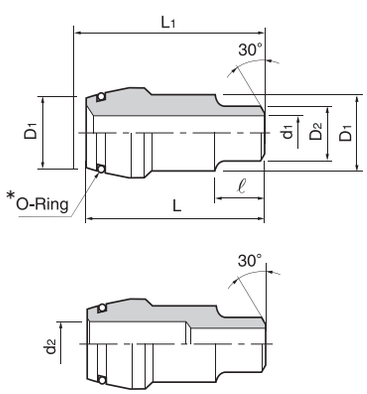

Pressure Rating	Part No.	Tube O.D		d1	d2	L	L_1	ℓ
		D_1	D_2					
PN-526	DDAKR-10-06-1.5T	10	6	3	5	35	37.5	12
PN-526	DDAKR-10-08-2.0T	10	8	4	-	35	37.5	12
PN-526	DDAKR-12-08-2.0T	12	8	4	6	35	37.5	14
PN-357	DDAKR-12-10-1.5T	12	10	7	-	35	37.5	14
PN-474	DDAKR-16-12-2.5T	16	12	7	-	43	46.5	15
PN-474	DDAKR-20-12-2.5T	20	12	7	-	47.5	51.5	15
PN-433	DDAKR-20-16-3.0T	20	16	10	-	49.5	53.5	17
PN-433	DDAKR-25-16-3.0T	25	16	10	-	51	56.5	17
PN-458	DDAKR-25-20-4.0T	25	20	12	-	54	59.5	20
PN-303	DDAKR-30-16-2.0T	30	16	12	-	60	67	17
PN-303	DDAKR-30-20-2.5T	30	20	15	-	63	70	20
PN-292	DDAKR-30-25-3.0T	30	25	19	-	63	70	20
PN-303	DDAKR-38-16-2.0T	38	16	12	-	69.5	79	17
PN-303	DDAKR-38-20-2.5T	38	20	15	-	72.5	82	20
PN-292	DDAKR-38-25-3.0T	38	25	19	-	72.5	82	20
PN-321	DDAKR-38-30-4.0T	38	30	22	-	72.5	82	20

Dimensions given approximate length with tightened nut. All dimensions are in millimeters, for reference only subject to change.
****O-ring of NBR (e.g. PERBUNAN®) Standard, of FPM (e.g. VITON®) on request.***

Installtion Instruction for Welding Nipple Fittings

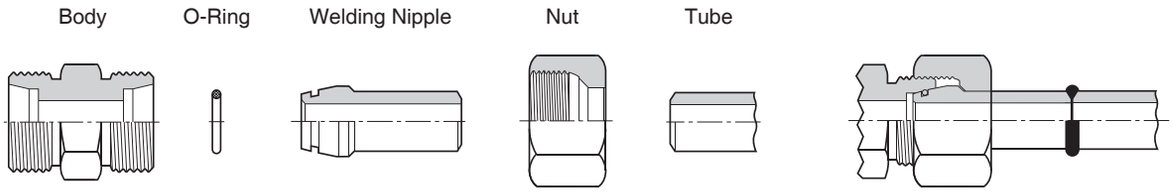

Step1. Pipe to be cut at right angle by sawing and freed from burrs both inside and outside.
Step2. Slide nut onto the weld nipple.
Step3. Welding nipple and tube to be welded together and weld to be cleaned between runs.
The tube and welding nipple must be aligned.
Step4. Fit the O-Ring: Attention, do not twist O-Ring: taper, nut and cone must be clean.
Step5. Thread on body and nut to be oiled.
Step6. Screw on nut by hand. Fully tighten using a spanner with a 1/3 turn.

Ordering information for Welding Nipple Fittings

Order No.	Figures
	DDU (Without Cutting Ring)+DDAK
DDGV	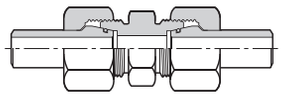
	DDL (Without Cutting Ring)+DDAK
DDWV	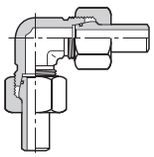
	DDT (Without Cutting Ring)+DDAK
DDTV	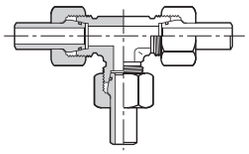
	DDSWVE (Without Cutting Ring)+DDAK
DDWSEV	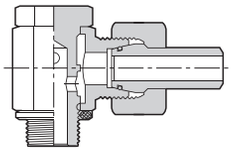

Order No.	Figures
	DDMC (Without Cutting Ring)+DDAK
DDGEV	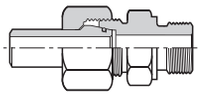
	DDMC-ED (Without Cutting Ring)+DDAK
DDGUV	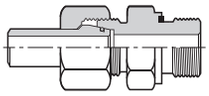
	DDMC (Without Cutting Ring)+DDAK
DDGEV-R	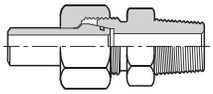
	DDFC (Without Cutting Ring)+DDAK
DDGAI	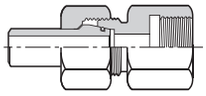
	DDLM (Without Cutting Ring)+DDAK
DDWEV	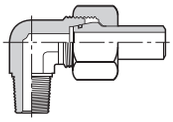

Male Female Adaptor
(BSP Parallel)

DMFAD

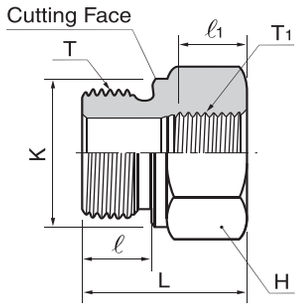

From B stud end

Pressure Rating	Part No.	H	K	L	ℓ	ℓ1	Male stud (T)	Female stud (T_1)
PN-630	DMFAD-03-01G	22	22	22.5	12	8	PF 3/8	PF 1/8
	DMFAD-04-01G	27	26	24	14	8	PF 1/2	PF 1/8
PN-400	DMFAD-04-02G	27	26	24	14	12	PF 1/2	PF 1/4
	DMFAD-06-02G	32	32	26	16	12	PF 3/4	PF 1/4
	DMFAD-06-03G	32	32	26	16	12	PF 3/4	PF 3/8
	DMFAD-08-02G	41	39	29	18	12	PF 1	PF 1/4
	DMFAD-08-03G	41	39	29	18	12	PF 1	PF 3/8
	DMFAD-08-04G	41	39	29	18	14	PF 1	PF 1/2
PN-250	DMFAD-10-04G	50	49	32	20	14	PF 1-1/4	PF 1/2
	DMFAD-10-06G	50	49	32	20	16	PF 1-1/4	PF 3/4
	DMFAD-12-04G	55	55	36	22	14	PF 1-1/2	PF 1/2
	DMFAD-12-06G	55	55	36	22	16	PF 1-1/2	PF 3/4
	DMFAD-12-08G	55	55	36	22	18	PF 1-1/2	PF 1

Male/ Female thread adaptors with metric and NPT thresd on request. All dimensions are in millimeters, for reference only subject to change.

Male Female Adaptor
(BSP Parallel)

DMFAE

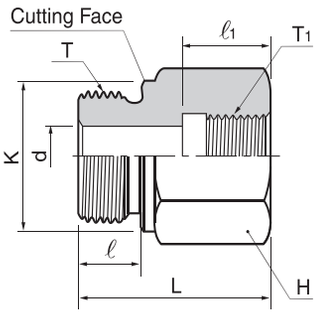

From B stud end

Pressure Rating	Part No.	d	H	K	L	ℓ	ℓ1	Male stud (T)	Female stud (T_1)
PN-630	DMFAE-01-02G	4	19	14	31	8	17	PF 1/8	PF 1/4
	DMFAE-01-03G	4	24	14	32	8	17	PF 1/8	PF 3/8
	DMFAE-02-01G	5	19	18	28	12	12	PF 1/4	PF 1/8
	DMFAE-02-03G	5	24	18	36	12	17	PF 1/4	PF 3/8
	DMFAE-02-04G	5	30	18	40	12	20	PF 1/4	PF 1/2
	DMFAE-03-02G	8	22	22	36	12	17	PF 3/8	PF 1/4
	DMFAE-03-04G	8	30	22	41	12	20	PF 3/8	PF 1/2
PN-400	DMFAE-02-06G	5	36	18	43	12	22	PF 1/4	PF 3/4
	DMFAE-04-03G	12	27	26	36	14	17	PF 1/2	PF 3/8
	DMFAE-04-06G	12	36	26	46	14	22	PF 1/2	PF 3/4
	DMFAE-04-08G	12	41	26	49	14	24.5	PF 1/2	PF 1
	DMFAE-06-04G	16	32	32	41	16	20	PF 3/4	PF 1/2
	DMFAE-06-08G	16	41	32	51	16	24.5	PF 3/4	PF 1
	DMFAE-06-10G	16	55	32	55	1	26.5	PF 3/4	PF 1-1/4
	DMFAE-08-06G	20	41	39	47	18	22	PF 1	PF 3/4
PN-250	DMFAE-03-06G	8	36	22	44	12	22	PF 3/8	PF 3/4
	DMFAE-04-10G	10	55	26	53	14	26.5	PF 1/2	PF 1-1/4
	DMFAE-06-12G	16	60	32	57	16	28.5	PF 3/4	PF 1-1/2
	DMFAE-08-10G	20	55	39	57	18	26.5	PF 1	PF 1-1/4
	DMFAE-08-12G	20	60	39	59	18	28.5	PF 1	PF 1-1/2
	DMFAE-10-08G	25	50	49	52	20	24.5	PF 1-1/4	PF 1
	DMFAE-10-12G	25	60	49	60	20	28.5	PF 1-1/4	PF 1-1/2
	DMFAE-12-10G	32	55	55	58	22	26.5	PF 1-1/2	PF 1-1/4
	DMFAE-16-12G	40	70	68	62	24	28.5	PF 2	PF 1-1/2

Male/ Female thread adaptors with metric and NPT thresd on request. All dimensions are in millimeters, for reference only subject to change.

Male Female Adaptor
*(BSP Parallel) with *ED-Ring*

DMFAD-ED

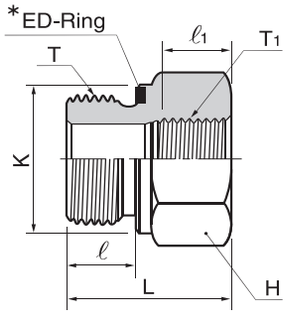

From B stud end

Pressure Rating	Part No.	H	K	L	ℓ	ℓ1	Male stud (T)	Female stud (T1)
PN-630	DMFAD-03ED-01G	22	22	22.5	12	8	PF 3/8	PF 1/8
	DMFAD-04ED-01G	27	26	24	14	8	PF 1/2	PF 1/8
PN-400	DMFAD-04ED-02G	27	26	24	14	12	PF 1/2	PF 1/4
	DMFAD-06ED-02G	32	32	26	16	12	PF 3/4	PF 1/4
	DMFAD-06ED-03G	32	32	26	16	12	PF 3/4	PF 3/8
	DMFAD-08ED-02G	41	39	29	18	12	PF 1	PF 1/4
	DMFAD-08ED-03G	41	39	29	18	12	PF 1	PF 3/8
	DMFAD-08ED-04G	41	39	29	18	14	PF 1	PF 1/2
PN-250	DMFAD-10ED-04G	50	49.9	32	20	14	PF 1-1/4	PF 1/2
	DMFAD-10ED-06G	50	49.9	32	20	16	PF 1-1/4	PF 3/4
	DMFAD-12ED-04G	55	55	36	22	14	PF 1-1/2	PF 1/2
	DMFAD-12ED-06G	55	55	36	22	16	PF 1-1/2	PF 3/4
	DMFAD-12ED-08G	55	55	36	22	18	PF 1-1/2	PF 1

All dimensions are in millimeters, for reference only subject to change.
**ED-ring of NBR (e.g. PERBUNAN®) Standard, of FPM (e.g. VITON®) on request.*

Male Female Adaptor
*(BSP Parallel) with *ED-Ring*

DMFAE-ED

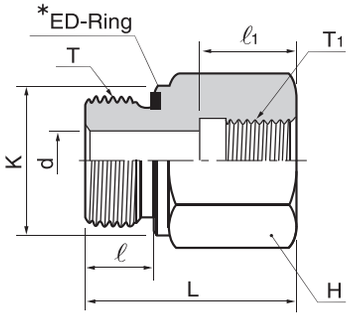

From B stud end

Pressure Rating	Part No.	d	H	K	L	ℓ	ℓ1	Male stud (T)	Female stud (T1)
PN-630	DMFAE-01ED-02G	4	19	14	31	8	17	PF 1/8	PF 1/4
	DMFAE-01ED-03G	4	24	14	32	8	17	PF 1/8	PF 3/8
	DMFAE-02ED-01G	5	19	18	28	12	12	PF 1/4	PF 1/8
	DMFAE-02ED-03G	5	24	18	36	12	17	PF 1/4	PF 3/8
	DMFAE-02ED-04G	5	30	18	40	12	20	PF 1/4	PF 1/2
	DMFAE-03ED-02G	8	22	22	36	12	17	PF 3/8	PF 1/4
	DMFAE-03ED-04G	8	30	22	41	12	20	PF 3/8	PF 1/2
PN-400	DMFAE-02ED-06G	5	36	18	43	12	22	PF 1/4	PF 3/4
	DMFAE-04ED-03G	12	27	26	36	14	17	PF 1/2	PF 3/8
	DMFAE-04ED-06G	12	36	26	46	14	22	PF 1/2	PF 3/4
	DMFAE-04ED-08G	12	41	26	49	14	24.5	PF 1/2	PF 1
	DMFAE-06ED-04G	16	32	32	41	16	20	PF 3/4	PF 1/2
	DMFAE-06ED-08G	16	41	32	51	16	24.5	PF 3/4	PF 1
	DMFAE-06ED-10G	16	55	32	55	1	26.5	PF 3/4	PF 1-1/4
	DMFAE-08ED-06G	20	41	39	47	18	22	PF 1	PF 3/4
PN-250	DMFAE-03ED-06G	8	36	22	44	12	22	PF 3/8	PF 3/4
	DMFAE-04ED-10G	10	55	26	53	14	26.5	PF 1/2	PF 1-1/4
	DMFAE-06ED-12G	16	60	32	57	16	28.5	PF 3/4	PF 1-1/2
	DMFAE-08ED-10G	20	55	39	57	18	26.5	PF 1	PF 1-1/4
	DMFAE-08ED-12G	20	60	39	59	18	28.5	PF 1	PF 1-1/2
	DMFAE-10ED-08G	25	50	49.9	52	20	24.5	PF 1-1/4	PF 1
	DMFAE-10ED-12G	25	60	49.9	60	20	28.5	PF 1-1/4	PF 1-1/2
	DMFAE-12ED-10G	32	55	55	58	22	26.5	PF 1-1/2	PF 1-1/4
	DMFAE-16ED-12G	40	70	68	62	24	28.5	PF 2	PF 1-1/2

All dimensions are in millimeters, for reference only subject to change.
**ED-ring of NBR (e.g. PERBUNAN®) Standard, of FPM (e.g. VITON®) on request.*

*Blanking Plugs for Port with *ED-Ring*

DDVSTI-GED

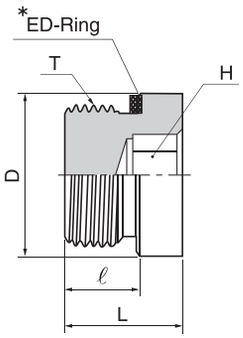

Pressure Rating	Part No.	T	D	H	L	ℓ
PN-400	DDVSTI-01GED	PF 1/8	13.9	5	12	8
	DDVSTI-02GED	PF 1/4	18.9	6	17	12
	DDVSTI-03GED	PF 3/8	21.9	8	17	12
	DDVSTI-04GED	PF 1/2	26.9	10	19	14
	DDVSTI-06GED	PF 3/4	31.9	12	21	16
	DDVSTI-08GED	PF 1	39.9	17	22.5	16
PN-250	DDVSTI-10GED	PF 1-1/4	49.9	22	22.5	16
	DDVSTI-12GED	PF 1-1/2	54.9	24	22.5	16

All dimensions are in millimeters, for reference only subject to change.
**ED-ring of NBR (e.g. PERBUNAN®) Standard, of FPM (e.g. VITON®) on request.*

*Blanking Plugs for Port with *ED-Ring*

DDVSTI-MED

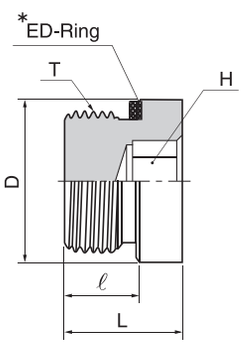

Pressure Rating	Part No.	T	D	H	L	ℓ
PN-400	DDVSTI-M10ED	M10 x 1	13.9	5	12	8
	DDVSTI-M12ED	M12 x 1.5	16.9	6	17	12
	DDVSTI-M14ED	M14 x 1.5	18.9	6	17	12
	DDVSTI-M16ED	M16 x 1.5	21.9	8	17	12
	DDVSTI-M18ED	M18 x 1.5	23.9	8	17	12
	DDVSTI-M20ED	M20 x 1.5	25.9	10	19	14
	DDVSTI-M22ED	M22 x 1.5	26.9	10	19	14
	DDVSTI-M26ED	M26 x 1.5	31.9	12	21	16
	DDVSTI-M27ED	M27 x 2	31.9	12	21	16
	DDVSTI-M33ED	M33 x 2	39.9	17	22.5	16
PN-250	DDVSTI-M42ED	M42 x 2	49.9	22	22.5	16
	DDVSTI-M48ED	M48 x 2	54.9	24	22.5	16

All dimensions are in millimeters, for reference only subject to change.
**ED-ring of NBR (e.g. PERBUNAN®) Standard, of FPM (e.g. VITON®) on request.*

*Blanking Plugs with *O-Ring (Accord.to ISO 6149-3/DIN 3582)*

DDVSTI

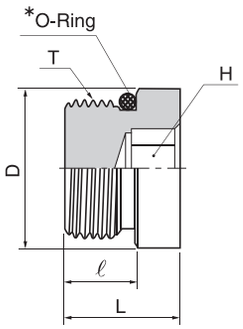

Pressure Rating	Part No.	T	D	H	L	ℓ
PN-630	DDVSTI-M10	M10 x 1	13	5	14	10
	DDVSTI-M12	M12 x 1.5	17	6	16.5	11.5
	DDVSTI-M14	M14 x 1.5	19	6	16.5	11.5
	DDVSTI-M16	M16 x 1.5	21	6	18	13
	DDVSTI-M18	M18 x 1.5	23	8	19.5	14.5
PN-400	DDVSTI-M22	M22 x 1.5	27	10	20.5	15.5
	DDVSTI-M26	M26 x 1.5	31	12	21	16
	DDVSTI-M27	M27 x 2	32	12	24	19
	DDVSTI-M33	M33 x 2	38	17	25.5	19
	DDVSTI-M42	M42 x 2	48	22	26	19.5

All dimensions are in millimeters, for reference only subject to change.
**O-ring of NBR (e.g. PERBUNAN®) Standard, of FPM (e.g. VITON®) on request.*

*Blanking Plug with *O-Ring*

DDVKA

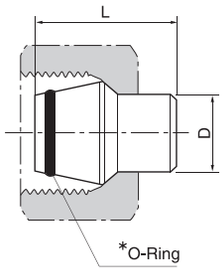

Series	Part No.	Tube O.D	L
L PN-315 / PN-630	DDVKA-06	6	18.5
	DDVKA-08	8	18.5
	DDVKA-10	10	20
	DDVKA-12	12	20.5
	DDVKA-15L	15	20.5
	DDVKA-18L	18	22.5
PN-160	DDVKA-22L	22	25
	DDVKA-28L	28	25.5
	DDVKA-35L	35	30
	DDVKA-42L	42	30
S PN-630	DDVKA-14S	14	22.5
PN-400	DDVKA-16S	16	23.5
	DDVKA-20S	20	28.5
	DDVKA-25S	25	29
	DDVKA-30S	30	30.5
PN-315	DDVKA-38S	38	33

From 6mm to 12mm OD plug, both L Series and S Series are used same plug of the tube OD.
All dimensions are in millimeters, for reference only subject to change.
**O-ring of NBR (e.g. PERBUNAN®) Standard, of FPM (e.g. VITON®) on request.*

Tube Cap

DDCA

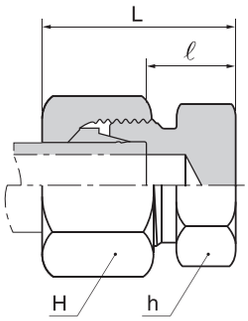

Series	Part No.	Tube O.D	H	h	L	ℓ
L PN-315	DDCA-06L	6	14	12	22	7
	DDCA-08L	8	17	14	23	8
	DDCA-10L	10	19	17	24	9
	DDCA-12L	12	22	19	25	10
	DDCA-15L	15	27	24	26	11
	DDCA-18L	18	32	27	28	11.5
PN-160	DDCA-22L	22	36	32	30	13.5
	DDCA-28L	28	41	41	31	14.5
	DDCA-35L	35	50	46	36	14.5
	DDCA-42L	42	60	55	39	16
S PN-630	DDCA-06S	6	17	14	26	11
	DDCA-08S	8	19	17	28	13
	DDCA-10S	10	22	19	29	12.5
	DDCA-12S	12	24	22	31	14.5
	DDCA-14S	14	27	24	34	16
PN-400	DDCA-16S	16	30	27	34	15.5
	DDCA-20S	20	36	32	39	17.5
	DDCA-25S	25	46	41	44	20
	DDCA-30S	30	50	46	47	20.5
PN-315	DDCA-38S	38	60	55	54	23

Dimensions given approximate length with tightened nut. All dimensions are in millimeters, for reference only subject to change.

Nut

DDN

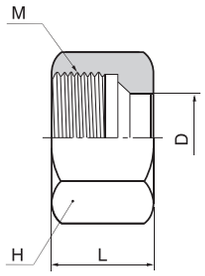

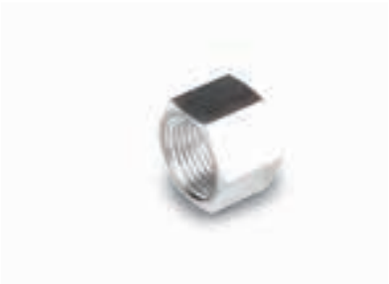

Series	Part No.	Tube O.D (D)	H	L	M
LL Very Light	DDN-04LL	4	10	11.5	M8 x 1.0
	DDN-06LL	6	12	12	M10 x 1.0
	DDN-08LL	8	14	12.5	M12 x 1.0
	DDN-10LL	10	17	12.5	M14 x 1.0
	DDN-12LL	12	19	13	M16 x 1.0
L Light	DDN-06L	6	14	15	M12 x 1.5
	DDN-08L	8	17	15	M14 x 1.5
	DDN-10L	10	19	16	M16 x 1.5
	DDN-12L	12	22	16	M18 x 1.5
	DDN-15L	15	27	17.5	M22 x 1.5
	DDN-18L	18	32	18	M26 x 1.5
	DDN-22L	22	36	20.5	M30 x 2
	DDN-28L	28	41	21	M36 x 2
	DDN-35L	35	50	24	M45 x 2
	DDN-42L	42	60	24	M52 x 2
S Heavy	DDN-06S	6	17	16.5	M14 x 1.5
	DDN-08S	8	19	16.5	M16 x 1.5
	DDN-10S	10	22	17.5	M18 x 1.5
	DDN-12S	12	24	18	M20 x 1.5
	DDN-14S	14	27	20.5	M22 x 1.5
	DDN-16S	16	30	21	M24 x 1.5
	DDN-20S	20	36	24	M30 x 2
	DDN-25S	25	46	27	M36 x 2
	DDN-30S	30	50	29.5	M42 x 2
	DDN-38S	38	60	32.5	M52 x 2

All dimensions are in millimeters, for reference only subject to change.

Cutting Ring

DDS

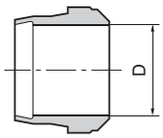

Compression end Detail

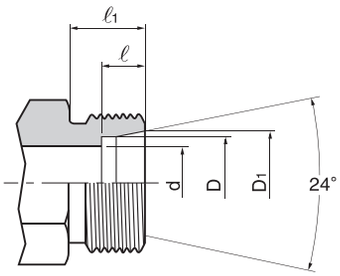

Series	Part No.	Tube O.D (D)	D_1	d	ℓ	$ℓ_1$
LL Very Light	DDS-04LL	4	5	3	4	8
	DDS-06LL	6	7.5	4.5	5.5	8
	DDS-08LL	8	9.5	6	5.5	9
	DDS-10LL	10	11.5	8	6	9
	DDS-12LL	12	13.5	10	6	9
L Light	DDS-06L	6	8.1	4	7	10
	DDS-08L	8	10.1	6	7	10
	DDS-10L	10	12.3	8	7	11
	DDS-12L	12	14.3	10	7	11
	DDS-15L	15	17.3	12	7	12
	DDS-18L	18	20.3	15	7.5	12
	DDS-22L	22	24.3	19	7.5	14
	DDS-28L	28	30.3	24	7.5	14
	DDS-35L	35	38	30	10.5	16
	DDS-42L	42	45	36	11	16
S Heavy	DDS-06S	6	8.1	4	7	12
	DDS-08S	8	10.1	5	7	12
	DDS-10S	10	12.3	7	7.5	12
	DDS-12S	12	14.3	8	7.5	12
	DDS-14S	14	16.3	10	8	14
	DDS-16S	16	18.3	12	8.5	14
	DDS-20S	20	22.9	16	10.5	16
	DDS-25S	25	27.9	20	12	18
	DDS-30S	30	33	25	13.5	20
	DDS-38S	38	41	32	16	22

All dimensions are in millimeters, for reference only subject to change.

S-LOK®

Bite Type Tube Fittings (JIS B2351)

The best partner for value creation
We support the innovations of customer

03

Catalogue No. S-LOK Mar.2024

General Information For Our Bite Type Tube Fittings.

HANSUN bite type tube fittings are precision-machined, under strict quality control. HANSUN bite type tube fittings are the flareless tube fitting with the visible bite. This added safety feature makes them the preferred fitting for non-flared tube connections.

How Do They Work?

The bite type flareless hydraulic tube fitting is designed to work on medium to heavy wall tubing that is hard to flare.
It consists of three parts :
1. body, 2. sleeve, 3. nut. (As shown in Fig-1)

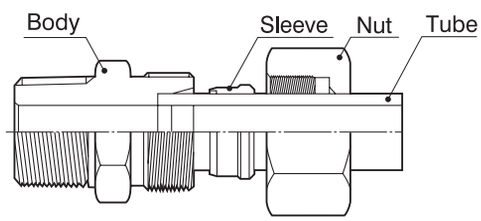

Fig -1

The sleeve is driven forward on the tube by the nut.
As the sleeve moves forward it meets the seal seat angle of the body which causes the sleeve to cam inward into the tube. The sleeve then bites into the tube causing a small ridge of tube material to be pushed up in front of the biting edge of the sleeve.(As shown in Fig-2&3)

Assembled, with bite in tube

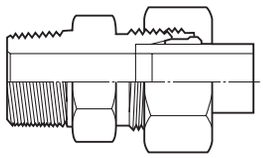

Fig - 2

Enlarged figure of bite in tube

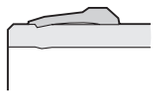

Fig - 3

The make-up of the fitting is critical in that the tube must be bottomed against the tube stop in the body or presetting tool during make up. If it is not bottomed the tube will move forward with the sleeve and a bite will not be achieved make sure the tube is bottomed.

A check is possible to see if the tube is bottomed during make up, To make this check inspect the end of the tube and see if a circular appearing ring has been impressed into the tube end face.
This impression may be caused by the tube stop which has a slight reverse angle rather than a flat face.

Material Specfications

Parts	Steel	Stainless Steel	Brass
Forged body	S20C-S48C	SUS316 or A182 F316	C3771
Bar Stock Body	S20C-S48C	SUS316 or A276/A479 S316	C3604
Cold Formed Nut	S10C-S20C or JIS G3507		
Bar Stock Nut	S20C-S48C	SUS316-SUS304 or A276/A479 S316/S304	C3604
Sleeve	S10C	SUS316-SUS304 or A276/A479 S316/S304	C3604

Gasket and O-ring Temperature Ratings

Component	Material	Temperature Ratings
O-ring	NBR(Buna N)	-31˚F to 230˚F of (-35˚C to 110˚C)
	FKM(Viton®)	-20˚F to 400˚F (-28˚C to 204˚C)
SGC	Copper	-325˚F to 400˚F (-198˚C to 204˚C)
SGB	NBR(Buna N)	-13˚F to 230˚F of (-25˚C to 110˚C)
	FKM(Viton®)	5˚F to 400˚F (-15˚C to 204˚C)
Thread sealant teflon tape		-320˚F to 450˚F (-196˚C to 232˚C)

Applicable Pressure Rating

Our standard specifications of the fittings are as follows

Fitting Size (applicable Tube O.D)	4 ~ 15	16 ~ 22	25 ~ 28	30 ~ 38	40 ~ 45
Rated pressure (kgf/cm²)	500	400	350	250	210
Max.working temperature (˚C)			300		

The Rated Pressure for the fittings are determined based on the results of the design specification confirmed by severe repetitive tests; the rated pressures are determined for each size of fittings while the safety factor of as much as 4 is taken into account in the design.

Suitable Tubing Materials

Common materal of tubing includes :

Steel - Seamless, fully annealed, also welded and redrawn type suitable for bending. Maximum hardness, Rockwell B72.

Stainless Steel - Seamless, fully annealed, also welded redrawn, fully annealed suitable for bending. Maximum hardness, Rockwell B90.

Copper - Seamless coils, soft or light annealed, Maximum hardness Rockwell F55. Straight lengths. light drawn and general purpose. Maximum hardness of 60 on Rockwell 30T scale.

Assembly Instructions

Cutting The Tube
Cut tube squarely and de-burr lightly the end both internally and externally.

Sleeve Placement
Slip nut and sleeve onto tubing. Be sure the long straight end of the sleeve points toward tube end.

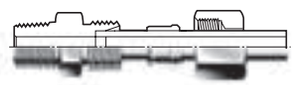

Nut and sleeve on tube

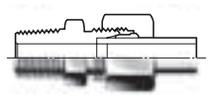

Tube bottomed in fitting

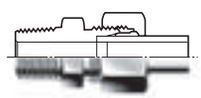

Assembled with bite on tube

Lubrication
Lightly lubricate threads on tool or body as well as the tail and lead end of the sleeve with extreme friction lubricant.

Pre-Setting
Insert tube end into tool or fitting until it sits on the shoulder(to hold tube motionless during pre-setting) and screw the nut down with finger tight.

Final Setting
Wrench nut down 1-1/2 turns to pre-set the sleeve(Reliable make-up of all flareless tube fittings is dependent upon the sleeve traveling a prescribed distance into tapered fitting throat in order to bite into the tube and effect a positive grip and seal.

Reassemble For Final Installation

Insert the tube into the fitting body and wrench the nut down until a sudden increase in torque occurs. From this point turn the nut an additional 1/4 to 1/3 turn(1-1/2 to 2 wrench flats) to again spring the sleeve into place to seal against the tubing and the fitting body.

Inspection Of Bite

All HANSUN bite type tube fittings must be disassembled and inspected for proper make-up before final assembley.
Detailed inspection procedures are outlined below and must be followed regardless of the method used to pre-set the sleeve to the tube.

You Should Make Certain That

1. A ridge of metal has been raised above the tube surfaces, to a height of at least 50% of the thickness of the sleeve leading edge, completely around the tube(A)
2. While the leading edge of the sleeve may be coined flat(B) there is a slight bow to the balance of the pilot section(C)
3. The tail or back end of the sleeve is snugged against the tube(D)
4. There is a slight indentation all around the end of the tube(E) that indicates the tube was bottomed in the tool or fitting during pre-setting (unless evidence of this complete contact is visible the sleeve cannot be considered properly pre-set).
5. Avoid rotating the sleeve. Steel sleeve should not be capable of moving back and forth along tube, beyond the bite area(stainless steel sleeve will move more than steel because of its spring back characteristics).

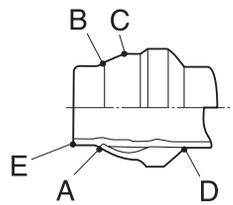

Trouble Shooting

Problems with bite type hydraulic fittings are most often traced to faulty make-up procedures. Look for the following :

1. Tube not bottomed
Check for the indentation on the tube end or compare length from end of tube to the front end of the sleeve with that of a known good assembly.

2. Lack of bite
inspect for turned up ridge of material. A failure to achieve this ridge can be traced either to the fact that the nut was not tightened enough or that the tube was not bottomed against the stop which allowed the tube to travel forward with the sleeve.

3. Sleeve cocked on tube
The sleeve is cocked on the tube when the tube assembly is off axis with that of the body. Generally this condition is caused by faulty tube bending. All bent tube assemblies should drop into the fitting body prior to make up.

4. No bite
If all of the above checks have been made and the sleeve still shows no sign of biting the tube, it may be that the tube is too hard.

Straight Union

BU

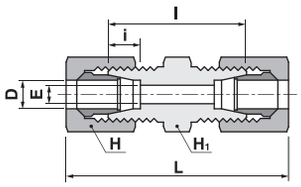

Part No.	Tube O.D D	E	Width across flat H_1	Width across flat H	i	l	Approx L
BU-06	6	4	14	14	7	30	51
BU-08	8	6	17	17	7	31	52
BU-10	10	8	17	19	7	31	54
BU-12	12	10	19	22	7	31	54
BU-15	15	12	24	27	7.5	36	61
BU-16	16	13	27	30	7.5	36	61
BU-18	18	14	27	32	8	36	61
BU-20	20	17	30	36	8	38	63
BU-22	22	18	32	36	9	38	63
BU-25	25	20	36	41	10	38	66
BU-28	28	22	41	46	10	43	71
BU-30	30	25	41	46	10	43	72
BU-32	32	26	46	50	11	44	73
BU-35	35	28	46	55	11	44	79
BU-38	38	32	50	60	12	46	85
BU-40	40	32	55	60	12	55	94
BU-42	42	34	55	60	12	55	94
BU-06A	10.5	8	17	19	7	31	54
BU-08A	13.8	11	22	24	7.5	38	60
BU-10A	17.3	14	27	32	8	38	61
BU-15A	21.7	18	32	36	9	38	63
BU-20A	27.2	22	41	46	10	43	71
BU-25A	34.0	28	46	55	11	44	79
BU-32A	42.7	34	60	65	12	57	98
BU-40A	48.6	40	65	75	12	60	103

Union Elbow

BL

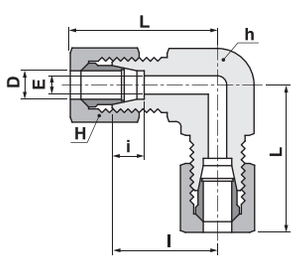

Part No.	Tube O.D D	E	Width across flat H_1	Width across flat H	i	l	Approx L
BL-06	6	4	14	14	7	20	30.5
BL-08	8	6	17	17	7	23	33.5
BL-10	10	8	17	19	7	23	34.5
BL-12	12	10	19	22	7	24	35.5
BL-15	15	12	24	27	7.5	29	41.5
BL-16	16	13	27	30	7.5	32	44.5
BL-18	18	14	27	32	8	32	44.5
BL-20	20	17	30	36	8	33	45.5
BL-22	22	18	32	36	9	34	46.5
BL-25	25	20	36	41	10	36	49.5
BL-28	28	22	41	46	10	41	55
BL-30	30	25	41	46	10	41	55.5
BL-32	32	26	46	50	11	45	59.5
BL-35	35	28	46	55	11	48	63.5
BL-38	38	32	50	60	12	50	69.5
BL-40	40	32	55	60	12	55	74.5
BL-42	42	34	55	60	12	55	74.5
BL-06A	10.5	8	17	19	7	23	34.5
BL-08A	13.8	11	22	24	7.5	28	40
BL-10A	17.3	14	27	32	8	32	44.5
BL-15A	21.7	18	32	36	9	34	46.5
BL-20A	27.2	22	41	46	10	41	55
BL-25A	34.0	28	46	55	11	46	63.5
BL-32A	42.7	34	60	65	12	57	77.5
BL-40A	48.6	40	65	75	12	62	83.5

Union Tee

BT

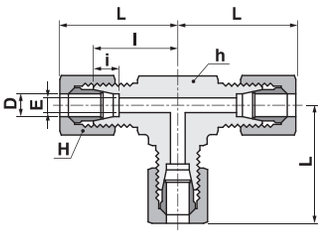

Part No.	Tube O.D D	E	Width across flat H_1	Width across flat H	i	l	Approx L
BT-06	6	4	14	14	7	20	30.5
BT-08	8	6	17	17	7	23	33.5
BT-10	10	8	17	19	7	23	34.5
BT-12	12	10	19	22	7	24	35.5
BT-15	15	12	24	27	7.5	29	41.5
BT-16	16	13	27	30	7.5	32	44.5
BT-18	18	14	27	32	8	32	44.5
BT-20	20	17	30	36	8	33	45.5
BT-22	22	18	32	36	9	34	46.5
BT-25	25	20	36	41	10	36	49.5
BT-28	28	22	41	46	10	41	55
BT-30	30	25	41	46	10	41	55.5
BT-32	32	26	46	50	11	45	59.5
BT-35	35	28	46	55	11	48	63.5
BT-38	38	32	50	60	12	50	69.5
BT-40	40	32	55	60	12	55	74.5
BT-42	42	34	55	60	12	55	74.5
BT-06A	10.5	8	17	19	7	23	34.5
BT-08A	13.8	11	22	24	7.5	28	40
BT-10A	17.3	14	27	32	8	32	44.5
BT-15A	21.7	18	32	36	9	34	46.5
BT-20A	27.2	22	41	46	10	41	55
BT-25A	34.0	28	46	55	11	46	63.5
BT-32A	42.7	34	60	65	12	57	77.5
BT-40A	48.6	40	65	75	12	62	83.5

Straight Bulkhead Union

BBU

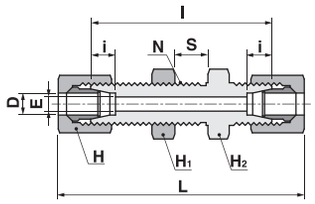

Part No.	Tube O.D D	E	Width across flat H_1	Width across flat H	i	l	Approx L	Panel Hole Drill Size N	Max.Panel Thickness S
BBU-06	6	4	17	14	7	51	51	12.5	13
BBU-08	8	6	19	17	7	51	52	14.5	13
BBU-10	10	8	22	19	7	52	54	16.5	13
BBU-12	12	10	24	22	7	52	54	18.5	13
BBU-15	15	12	27	27	7.5	59	61	22.5	15
BBU-16	16	13	30	30	7.5	61	61	24.5	15
BBU-18	18	14	32	32	8	63	61	26.5	15
BBU-20	20	17	32	36	8	63	63	28.5	15
BBU-22	22	18	36	36	9	64	63	30.5	15
BBU-25	25	20	41	41	10	64	66	35.5	15
BBU-28	28	22	46	46	10	69	71	38.5	15
BBU-30	30	25	46	46	10	69	72	40.5	15
BBU-32	32	26	50	50	11	73	73	42.5	15
BBU-35	35	28	50	55	11	73	79	45.5	15
BBU-38	38	32	55	60	12	76	85	48.5	15
BBU-40	40	32	60	60	12	87	94	52.5	15
BBU-06A	10.5	8	22	19	7	52	54	16.5	13
BBU-08A	13.8	11	27	24	7.5	59	60	20.5	15
BBU-10A	17.3	14	32	32	8	63	61	26.5	15
BBU-15A	21.7	18	36	36	9	64	63	30.5	15
BBU-20A	27.2	22	46	46	10	69	71	38.5	15
BBU-25A	34.0	28	50	55	11	73	79	45.5	15
BBU-32A	42.7	34	65	65	12	90	98	56.5	15
BBU-40A	48.6	40	70	75	12	93	103	64.5	15

Bulkhead Elbow

BBL

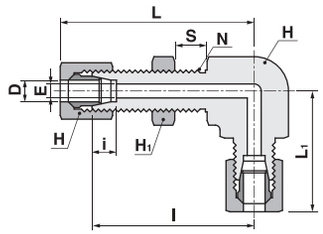

Part No.	Tube O.D D	E	Width across flat h	H_1	H	i	l	Approx L_1	L	Panel Hole Drill Size N	Max.Panel Thickness S
BBL-06	6	4	17	17	14	7	45	33.5	55.5	12.5	13
BBL-08	8	6	19	19	17	7	46	34.5	56.5	14.5	13
BBL-10	10	8	22	22	19	7	48	37.5	59.5	16.5	13
BBL-12	12	10	24	24	22	7	49	38.5	60.5	18.5	13
BBL-15	15	12	27	27	27	7.5	57	43.5	69.5	22.5	15
BBL-16	16	13	30	30	30	7.5	59	45.5	71.5	24.5	15
BBL-18	18	14	32	32	32	8	63	45.5	75.5	26.5	15
BBL-20	20	17	32	32	36	8	65	45.5	77.5	28.5	15
BBL-22	22	18	36	36	36	9	65	48.5	77.5	30.5	15
BBL-25	25	20	41	41	41	10	68	52.5	81.5	35.5	15
BBL-28	28	22	41	46	46	10	70	55	84	38.5	15
BBL-30	30	25	46	46	46	10	74	60.5	88.5	40.5	15

Long Male Connector

BLMC

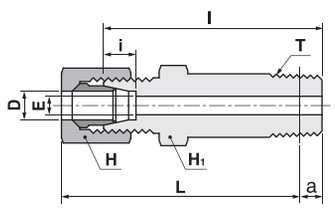

Part No.	Tube O.D D	PT T	E	Basic Gauge length a	Width across flat H_1	H	i	l	Approx L
BLMC-06-01R	6	1/8	4	3.97	14	14	7	63	69.5
BLMC-08-02R	8	1/4	6	6.01	17	17	7	70	74.5
BLMC-10-02R	10	1/4	7	6.01	17	19	7	71	76.5
BLMC-10-03R	10	3/8	8	6.35	19	19	7	72	77
BLMC-12-02R	12	1/4	7	6.01	19	22	7	71	76.5
BLMC-12-03R	12	3/8	9	6.35	19	22	7	72	77
BLMC-15-03R	15	3/8	9	6.35	24	27	7.5	81	87
BLMC-15-04R	15	1/2	12	8.16	24	27	7.5	86	90.5
BLMC-16-04R	16	1/2	12	8.16	27	30	7.5	86	90.5
BLMC-18-04R	18	1/2	12	8.16	27	32	8	86	90.5
BLMC-20-06R	20	3/4	16	9.53	30	36	8	92	95
BLMC-22-06R	22	3/4	16	9.53	32	36	9	93	96
BLMC-25-08R	25	1	20	10.39	36	41	10	99	102
BLMC-28-08R	28	1	22	10.39	41	46	10	104	107.5
BLMC-30-10R	30	1-1/4	25	12.7	46	46	10	109	111
BLMC-32-10R	32	1-1/4	26	12.7	46	50	11	110	112
BLMC-06A-02R	10.5	1/4	7	6.01	17	19	7	71	76.5
BLMC-08A-03R	13.8	3/8	9	6.35	22	24	7.5	81	86.5
BLMC-10A-03R	17.3	3/8	9	6.35	27	32	8	81	87
BLMC-15A-06R	21.7	3/4	16	9.53	32	36	9	93	96
BLMC-20A-08R	27.2	1	22	10.39	41	46	10	104	107.5

Male Connector

BMC-R

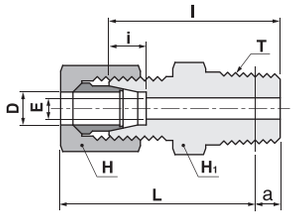

Part No.	Tube O.D D	PT T	E	Basic Gauge length a	Width across flat H_1	Width across flat H	i	l	Approx L
BMC-06-01R	6	1/8	4	3.97	14	14	7	28	34.5
BMC-06-02R	6	1/4	4	6.01	17	14	7	33	37.5
BMC-06-03R	6	3/8	4	6.35	17	14	7	34	38.5
BMC-08-01R	8	1/8	4	3.97	17	17	7	29	35.5
BMC-08-02R	8	1/4	6	6.01	17	17	7	33	37.5
BMC-10-02R	10	1/4	7	6.01	17	19	7	33	38.5
BMC-10-03R	10	3/8	8	6.35	19	19	7	34	39
BMC-10-04R	10	1/2	8	8.16	22	19	7	39	42.5
BMC-12-02R	12	1/4	7	6.01	19	22	7	33	38.5
BMC-12-03R	12	3/8	9	6.35	19	22	7	34	39
BMC-12-04R	12	1/2	10	8.16	22	22	7	39	42.5
BMC-15-03R	15	3/8	9	6.35	24	27	7.5	37	43
BMC-15-04R	15	1/2	12	8.16	24	27	7.5	41	45.5
BMC-16-03R	16	3/8	9	6.35	27	30	7.5	37	43
BMC-16-04R	16	1/2	12	8.16	27	30	7.5	41	45.5
BMC-18-04R	18	1/2	12	8.16	27	32	8	41	45.5
BMC-20-04R	20	1/2	12	8.16	30	36	8	43	47.5
BMC-20-06R	20	3/4	16	9.53	30	36	8	45	48
BMC-22-04R	22	1/2	12	8.16	32	36	9	43	47.5
BMC-22-06R	22	3/4	16	9.53	32	36	9	45	48
BMC-25-08R	25	1	20	10.39	36	41	10	49	52
BMC-28-08R	28	1	22	10.39	41	46	10	51	54.5
BMC-30-08R	30	1	22	10.39	41	46	10	51	55
BMC-30-10R	30	1-1/4	25	12.7	46	46	10	55	57
BMC-32-10R	32	1-1/4	26	12.7	46	50	11	55	57
BMC-35-10R	35	1-1/4	28	12.7	46	55	11	55	60
BMC-38-12R	38	1-1/2	32	12.7	50	60	12	57	64
BMC-40-12R	40	1-1/2	32	12.7	55	60	12	62	69
BMC-42-12R	42	1-1/2	34	12.7	55	60	12	62	69
BMC-06A-01R	10.5	1/8	4	3.97	17	19	7	29	36.5
BMC-06A-02R	10.5	1/4	7	6.01	17	19	7	33	38.5
BMC-08A-02R	13.8	1/4	7	6.01	22	24	7.5	36	42
BMC-08A-03R	13.8	3/8	9	6.35	22	24	7.5	37	42.5
BMC-10A-03R	17.3	3/8	9	6.35	27	32	8	37	43
BMC-10A-04R	17.3	1/2	12	8.16	27	32	8	41	45.5
BMC-15A-04R	21.7	1/2	12	8.16	32	36	9	43	47.5
BMC-15A-06R	21.7	3/4	16	9.53	32	36	9	45	48
BMC-20A-06R	27.2	3/4	16	9.53	41	46	10	48	52.5
BMC-20A-08R	27.2	1	22	10.39	41	46	10	51	54.5
BMC-25A-08R	34.0	1	22	10.39	46	55	11	52	59
BMC-25A-10R	34.0	1-1/4	28	12.7	46	55	11	55	60
BMC-32A-10R	42.7	1-1/4	31	12.7	60	65	12	64	72
BMC-32A-12R	42.7	1-1/2	34	12.7	60	65	12	64	72
BMC-40A-12R	48.6	1-1/2	36	12.7	65	75	12	67	76
BMC-40A-16R	48.6	2	40	15.88	65	75	12	71	76.5

Male Connector
(For Bonded Seal)

BMC-G

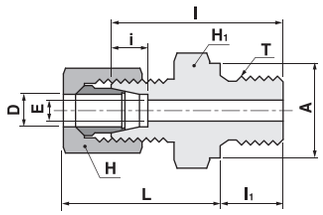

Part No.	Tube O.D	PF	E	Width across flat		i	l	A	l_1	Approx
	D	T		H_1	H					L
BMC-06-01G	6	1/8	4	14	14	7	28	14	8	30.5
BMC-06-02G	6	1/4	4	19	14	7	33	18	12	31.5
BMC-08-01G	8	1/8	4	17	17	7	28	14	8	30.5
BMC-08-02G	8	1/4	6	19	17	7	33	18	12	31.5
BMC-10-02G	10	1/4	7	19	19	7	33	18	12	32.5
BMC-10-03G	10	3/8	8	22	19	7	34	21.5	12	33.5
BMC-12-02G	12	1/4	7	19	22	7	33	18	12	32.5
BMC-12-03G	12	3/8	9	22	22	7	34	21.5	12	33.5
BMC-12-04G	12	1/2	10	27	22	7	39	25.5	14	36.5
BMC-15-03G	15	3/8	9	24	27	7.5	37	21.5	12	37.5
BMC-15-04G	15	1/2	12	27	27	7.5	41	25.5	14	39.5
BMC-16-04G	16	1/2	12	27	30	7.5	41	25.5	14	39.5
BMC-18-04G	18	1/2	12	27	32	8	41	25.5	14	39.5
BMC-20-06G	20	3/4	16	32	36	8	46	31.5	16	42.5
BMC-22-04G	22	1/2	12	32	36	9	43	25.5	14	41.5
BMC-22-06G	22	3/4	16	32	36	9	46	31.5	16	42.5
BMC-25-06G	25	3/4	16	36	41	10	46	31.5	16	43.5
BMC-25-08G	25	1	20	41	41	10	50	38	18	45.5
BMC-28-08G	28	1	22	41	46	10	52	38	18	48
BMC-30-08G	30	1	22	41	46	10	52	38	18	48.5
BMC-30-10G	30	1-1/4	25	50	46	10	57	48.5	20	51.5
BMC-32-10G	32	1-1/4	26	50	50	11	57	48.5	20	51.5
BMC-35-10G	35	1-1/4	28	50	55	11	57	48.5	20	54.5
BMC-38-12G	38	1-1/2	32	55	60	12	58	53.5	21	56.5
BMC-40-12G	40	1-1/2	32	55	60	12	62	53.5	21	60.5
BMC-42-12G	42	1-1/2	34	55	60	12	62	53.5	21	60.5
BMC-06A-01G	10.5	1/8	4	17	19	7	29	14	8	32.5
BMC-06A-02G	10.5	1/4	7	19	19	7	33	18	12	32.5
BMC-08A-02G	13.8	1/4	7	22	24	7.5	36	18	12	36
BMC-08A-03G	13.8	3/8	9	22	24	7.5	36	21.5	12	36
BMC-10A-03G	17.3	3/8	9	27	32	8	38	21.5	12	38.5
BMC-10A-04G	17.3	1/2	12	27	32	8	41	25.5	14	39.5
BMC-15A-04G	21.7	1/2	12	32	36	9	43	25.5	14	41.5
BMC-15A-06G	21.7	3/4	16	32	36	9	46	31.5	16	42.5
BMC-20A-06G	27.2	3/4	16	41	46	10	50	31.5	16	48
BMC-20A-08G	27.2	1	22	41	46	10	52	38	18	48
BMC-25A-08G	34.0	1	22	46	55	11	54	38	18	53.5
BMC-25A-10G	34.0	1-1/4	28	50	55	11	57	48.5	20	54.5
BMC-32A-10G	42.7	1-1/4	31	60	65	12	60	48.5	20	63.5
BMC-32A-12G	42.7	1-1/2	34	60	65	12	64	53.5	21	63.5
BMC-40A-12G	48.6	1-1/2	36	65	75	12	65	53.5	21	65.5
BMC-40A-16G	48.6	2	40	70	75	12	73	66	25	69.5

Male Connector
(For O-Ring)

BOM

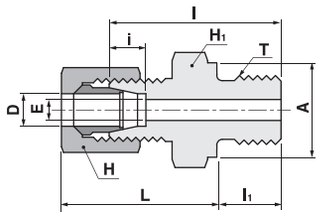

Part No.	Tube O.D	PF T	E	Width across flat		i	I	A	I_1	Approx
	D			H_1	H					L
BOM-06-01G	6	1/8	4	14	14	7	28	14	8	30.5
BOM-06-02G	6	1/4	4	19	14	7	33	19	12	31.5
BOM-08-01G	8	1/8	4	17	17	7	28	14	8	30.5
BOM-08-02G	8	1/4	6	19	17	7	33	19	12	31.5
BOM-10-02G	10	1/4	7	19	19	7	33	19	12	32.5
BOM-10-03G	10	3/8	8	22	19	7	34	22	12	33.5
BOM-12-02G	12	1/4	7	19	22	7	33	19	12	32.5
BOM-12-03G	12	3/8	9	22	22	7	34	22	12	33.5
BOM-12-04G	12	1/2	10	27	22	7	39	27	14	36.5
BOM-15-03G	15	3/8	9	24	27	7.5	37	22	12	37.5
BOM-15-04G	15	1/2	12	27	27	7.5	41	27	14	39.5
BOM-16-04G	16	1/2	12	27	30	7.5	41	27	14	39.5
BOM-18-04G	18	1/2	12	27	32	8	41	27	14	39.5
BOM-20-06G	20	3/4	16	36	36	8	46	36	16	42.5
BOM-22-06G	22	3/4	16	36	36	9	46	36	16	42.5
BOM-25-06G	25	3/4	16	36	41	10	46	36	16	43.5
BOM-25-08G	25	1	20	41	41	10	50	41	18	45.5
BOM-28-08G	28	1	22	41	46	10	52	41	18	48
BOM-30-08G	30	1	22	41	46	10	52	41	18	48.5
BOM-30-10G	30	1-1/4	25	50	46	10	57	50	20	51.5
BOM-32-10G	32	1-1/4	26	50	50	11	57	50	20	51.5
BOM-35-10G	35	1-1/4	28	50	55	11	57	50	20	54.5
BOM-38-12G	38	1-1/2	32	55	60	12	58	55	21	56.5
BOM-40-12G	40	1-1/2	32	55	60	12	62	55	21	60.5
BOM-42-12G	42	1-1/2	34	55	60	12	62	55	21	60.5
BOM-06A-01G	10.5	1/8	4	17	19	7	29	14	8	32.5
BOM-06A-02G	10.5	1/4	7	19	19	7	33	19	12	32.5
BOM-08A-02G	13.8	1/4	7	22	24	7.5	36	19	12	36
BOM-08A-03G	13.8	3/8	9	22	24	7.5	36	22	12	36
BOM-10A-03G	17.3	3/8	9	27	32	8	38	22	12	38.5
BOM-10A-04G	17.3	1/2	12	27	32	8	41	27	14	39.5
BOM-15A-04G	21.7	1/2	12	32	36	9	43	27	14	41.5
BOM-15A-06G	21.7	3/4	16	36	36	9	46	36	16	42.5
BOM-20A-06G	27.2	3/4	16	41	46	10	50	36	16	48
BOM-20A-08G	27.2	1	22	41	46	10	52	41	18	48
BOM-25A-08G	34.0	1	22	46	55	11	54	41	18	53.5
BOM-25A-10G	34.0	1-1/4	28	50	55	11	57	50	20	54.5
BOM-32A-10G	42.7	1-1/4	31	60	65	12	63	50	20	63.5
BOM-32A-12G	42.7	1-1/2	34	60	65	12	64	55	21	63.5
BOM-40A-12G	48.6	1-1/2	36	65	75	12	65	55	21	65.5
BOM-40A-16G	48.6	2	40	75	75	12	73	75	25	69.5

Male Elbow

BLM

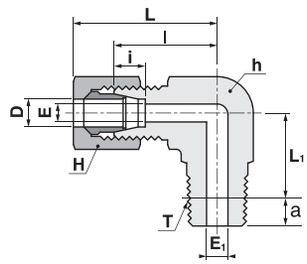

Part No.	Tube O.D D	PT T	E	E_1	Basic Gauge length a	Width across flat h	Width across flat H	i	l	Approx L	Approx L_1
BLM-06-01R	6	1/8	4	4	3.97	14	14	7	20	30.5	14
BLM-06-02R	6	1/4	4	7	6.01	17	14	7	23	33.5	17
BLM-08-01R	8	1/8	6	4	3.97	17	17	7	23	33.5	16
BLM-08-02R	8	1/4	6	7	6.01	17	17	7	23	33.5	18
BLM-10-02R	10	1/4	8	7	6.01	17	19	7	23	34.5	19
BLM-10-03R	10	3/8	8	9	6.35	19	19	7	24	35.5	19.5
BLM-10-04R	10	1/2	8	12	8.16	22	19	7	29	40.5	26
BLM-12-02R	12	1/4	10	7	6.01	19	22	7	24	35.5	20
BLM-12-03R	12	3/8	10	9	6.35	19	22	7	24	35.5	20.5
BLM-12-04R	12	1/2	10	12	8.16	22	22	7	29	40.5	26
BLM-15-03R	15	3/8	12	9	6.35	24	27	7.5	29	41.5	23.5
BLM-15-04R	15	1/2	12	12	8.16	24	27	7.5	29	41.5	26
BLM-16-03R	16	3/8	13	9	6.35	27	30	7.5	32	44.5	25.5
BLM-16-04R	16	1/2	13	12	8.16	27	30	7.5	32	44.5	27
BLM-18-03R	18	3/8	4	9	6.35	27	32	8	32	44.5	27.5
BLM-18-04R	18	1/2	14	12	8.16	27	32	8	32	44.5	30
BLM-20-04R	20	1/2	17	12	8.16	30	36	8	33	45.5	32
BLM-20-06R	20	3/4	17	16	9.53	30	36	8	33	45.5	30.5
BLM-22-04R	22	1/2	18	12	8.16	32	36	9	34	46.5	32
BLM-22-06R	22	3/4	18	16	9.53	32	36	9	34	46.5	32.5
BLM-25-06R	25	3/4	20	16	9.53	36	41	10	36	49.5	33.5
BLM-25-08R	25	1	20	22	10.39	36	41	10	36	49.5	35.5
BLM-28-06R	28	3/4	22	16	9.53	41	46	10	41	55	37.5
BLM-28-08R	28	1	22	22	10.39	41	46	10	41	55	39.5
BLM-30-08R	30	1	25	22	10.39	41	46	10	41	55.5	39.5
BLM-30-10R	30	1-1/4	25	31	12.7	46	46	10	46	60.5	42.5
BLM-32-10R	32	1-1/4	26	31	12.7	46	50	11	46	60.5	43.5
BLM-35-10R	35	1-1/4	28	31	12.7	46	55	11	46	63.5	45.5
BLM-38-12R	38	1-1/2	32	36	12.7	50	60	12	50	69.5	48.5
BLM-40-12R	40	1-1/2	32	36	12.7	55	60	12	55	74.5	49.5
BLM-42-12R	42	1-1/2	34	36	12.7	55	60	12	55	74.5	49.5
BLM-06A-01R	10.5	1/8	8	4	3.97	17	19	7	23	34.5	17
BLM-06A-02R	10.5	1/4	8	7	6.01	17	19	7	23	34.5	19
BLM-08A-02R	13.8	1/4	11	7	6.01	22	24	7.5	28	40	22
BLM-08A-03R	13.8	3/8	11	9	6.35	22	24	7.5	28	40	22.5
BLM-10A-03R	17.3	3/8	14	9	6.35	27	32	8	32	44.5	27.5
BLM-10A-04R	17.3	1/2	14	12	8.16	27	32	8	32	44.5	30
BLM-15A-04R	21.7	1/2	18	12	8.16	32	36	9	34	46.5	32
BLM-15A-06R	21.7	3/4	18	16	9.53	32	36	9	34	46.5	32.5
BLM-20A-06R	27.2	3/4	22	16	9.53	41	46	10	41	55	37.5
BLM-20A-08R	27.2	1	22	22	10.39	41	46	10	41	55	39.5
BLM-25A-08R	34.0	1	28	22	10.39	46	55	11	46	63.5	44.5
BLM-25A-10R	34.0	1-1/4	28	31	12.7	46	55	11	46	63.5	45.5
BLM-32A-10R	42.7	1-1/4	34	31	12.7	60	65	12	57	77.5	51.5
BLM-32A-12R	42.7	1-1/2	34	36	12.7	60	65	12	57	77.5	51.5
BLM-40A-12R	48.6	1-1/2	40	36	12.7	65	75	12	62	83.5	57.5
BLM-40A-16R	48.6	2	40	46	15.88	65	75	12	62	83.5	58

Long Male Elbow

BLLM

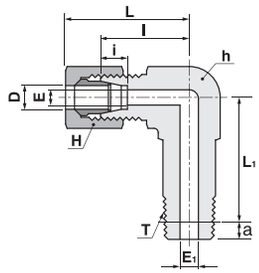

Part No.	Tube O.D D	PT T	E	E_1	Basic Gauge length a	Width across flat h	Width across flat H	i	l	Approx L	Approx L_1
BLLM-06-01R	6	1/8	4	4	3.97	14	14	7	20	30.5	36
BLLM-08-02R	8	1/4	6	7	6.01	17	17	7	23	33.5	43
BLLM-10-02R	10	1/4	8	7	6.01	17	19	7	23	34.5	46
BLLM-12-02R	12	1/4	10	7	6.01	19	22	7	24	35.5	52
BLLM-12-03R	12	3/8	10	9	6.35	19	22	7	24	35.5	53
BLLM-15-03R	15	3/8	12	9	6.35	24	27	7.5	29	41.5	61.5
BLLM-15-04R	15	1/2	12	12	8.16	24	27	7.5	29	41.5	67
BLLM-16-04R	16	1/2	13	12	8.16	27	30	7.5	32	44.5	70
BLLM-18-04R	18	1/2	14	12	8.16	27	32	8	32	44.5	77
BLLM-20-06R	20	3/4	17	16	9.53	30	36	8	33	45.5	82.5
BLLM-22-06R	22	3/4	18	16	9.53	32	36	9	34	46.5	83.5
BLLM-25-06R	25	3/4	20	16	9.53	36	41	10	36	49.5	90.5
BLLM-25-08R	25	1	20	22	10.39	36	41	10	36	49.5	91.5
BLLM-28-08R	28	1	22	22	10.39	41	46	10	41	55	104.5
BLLM-30-10R	30	1-1/4	25	31	12.7	46	46	10	46	60.5	104.5
BLLM-32-10R	32	1-1/4	26	31	12.7	46	50	11	46	60.5	104.5
BLLM-35-10R	35	1-1/4	28	31	12.7	46	55	11	46	63.5	121.5

O-Seal Male Elbow

BOLM

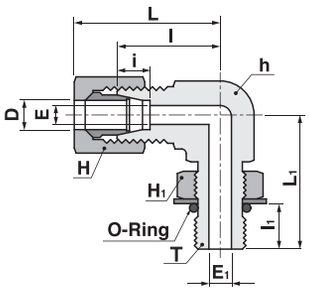

Part No.	Tube O.D D	PF T	E	E_1	Width across flat h	Width across flat H_1	Width across flat H	i	l	l_1	Approx L	Approx L_1
BOLM-06-01G	6	1/8	4	4	14	14	14	7	20	10	30.5	30
BOLM-08-02G	8	1/4	6	6	17	19	17	7	23	12	33.5	34
BOLM-10-02G	10	1/4	8	6	17	19	19	7	23	12	34.5	35
BOLM-12-02G	12	1/4	10	6	19	19	22	7	24	12	35.5	36
BOLM-12-03G	12	3/8	10	9	19	22	22	7	24	12	35.5	36
BOLM-12-04G	12	1/2	10	12	24	27	22	7	24	16	40.5	46
BOLM-15-03G	15	3/8	12	9	24	22	27	7.5	29	12	41.5	40
BOLM-15-04G	15	1/2	12	12	24	27	27	7.5	29	16	41.5	46
BOLM-16-04G	16	1/2	13	12	24	27	30	7.5	32	16	44.5	46
BOLM-18-04G	18	1/2	14	12	30	27	32	8	32	16	44.5	52
BOLM-20-06G	20	3/4	17	16	30	36	36	8	33	17	45.5	52
BOLM-22-06G	22	3/4	18	16	32	36	36	9	34	17	46.5	52
BOLM-25-06G	25	3/4	20	16	36	36	41	10	36	17	49.5	60
BOLM-25-08G	25	1	20	22	36	41	41	10	36	21	49.5	62
BOLM-28-08G	28	1	22	22	41	41	46	10	41	21	55	62
BOLM-30-08G	30	1	25	22	41	41	46	10	41	21	55.5	66
BOLM-30-10G	30	1-1/4	25	31	46	50	46	10	44	21	60.5	66
BOLM-32-10G	32	1-1/4	26	31	46	50	50	11	46	21	60.5	66
BOLM-35-10G	35	1-1/4	28	31	46	50	55	11	46	21	63.5	66
BOLM-38-12G	38	1-1/2	32	36	50	55	60	12	50	21	69.5	73

Banjo Elbow

BSLM

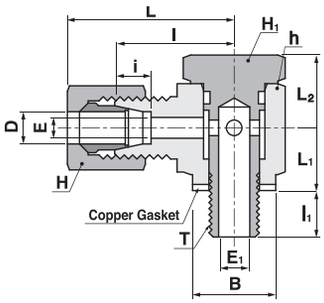

Part No.	Tube O.D	PF T	E	E_1	Width across flat			i	l	l_1	Approx			B
	D				h	H_1	H				L	L_1	L_2	
BSLM-06-01G	6	1/8	4	4	17	17	14	7	23	8	33.5	13	14	14
BSLM-08-02G	8	1/4	6	7	22	22	17	7	25	12	35.5	16	17	19.1
BSLM-10-02G	10	1/4	8	7	22	22	19	7	25	12	36.5	16	17	19.1
BSLM-12-03G	12	3/8	10	9	27	27	22	7	29	12	40.5	19	22	21.5
BSLM-15-04G	15	1/2	12	12	36	30	27	7.5	36	14	48.5	24	28	25.5
BSLM-16-04G	16	1/2	13	12	36	30	30	7.5	36	14	48.5	24	28	25.5
BSLM-18-04G	18	1/2	14	12	36	30	32	8	36	14	48.5	24	28	25.5
BSLM-20-06G	20	3/4	17	16	41	41	36	8	38	16	50.5	28	32	31.5
BSLM-22-06G	22	3/4	18	16	42	41	36	9	38	16	50.5	28	32	31.5
BSLM-25-08G	25	1	20	22	50	50	41	10	42	18	55.5	37	38	38
BSLM-28-08G	28	1	22	22	50	50	46	10	42	18	56	37	38	38
BSLM-06A-02G	10.5	1/4	8	7	22	22	19	7	25	12	36.5	16	17	18
BSLM-08A-03G	13.8	3/8	11	9	27	27	24	7.5	29	12	41	19	22	21.5
BSLM-10A-04G	17.3	1/2	14	12	36	30	32	8	36	14	48.5	24	28	25.5
BSLM-15A-06G	21.7	3/4	18	16	41	41	36	9	38	16	50.5	28	32	31.5
BSLM-20A-08G	27.2	1	22	22	50	50	46	10	42	18	56	37	38	38

Male Branch Tee

BBTM

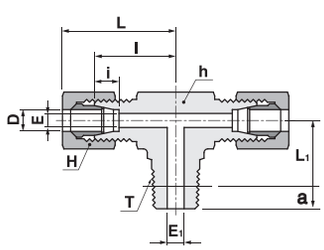

Part No.	Tube O.D	PT T	E	E_1	Basic Gauge length	Width across flat		i	l	Approx	
	D				a	h	H			L	L_1
BBTM-06-01R	6	1/8	4	4	3.97	14	14	7	20	30.5	14
BBTM-06-02R	6	1/4	4	7	6.01	17	14	7	23	33.5	17
BBTM-08-01R	8	1/8	6	4	3.97	17	17	7	23	33.5	16
BBTM-08-02R	8	1/4	6	7	6.01	17	17	7	23	33.5	18
BBTM-10-02R	10	1/4	8	7	6.01	17	19	7	23	34.5	19
BBTM-10-03R	10	3/8	8	9	6.35	19	19	7	24	35.5	19.5
BBTM-12-02R	12	1/4	10	7	6.01	19	22	7	24	35.5	20
BBTM-12-03R	12	3/8	10	9	6.35	19	22	7	24	35.5	20.5
BBTM-15-03R	15	3/8	12	9	6.35	24	27	7.5	29	41.5	23.5
BBTM-15-04R	15	1/2	12	12	8.16	24	27	7.5	29	41.5	26
BBTM-16-04R	16	1/2	13	12	8.16	27	30	7.5	32	44.5	27
BBTM-18-04R	18	1/2	14	12	8.16	27	32	8	32	44.5	30
BBTM-20-06R	20	3/4	17	16	9.53	30	36	8	33	45.5	30.5
BBTM-22-06R	22	3/4	18	16	9.53	32	36	9	34	46.5	32.5
BBTM-25-06R	25	3/4	20	16	9.53	36	41	10	36	49.5	33.5
BBTM-25-08R	25	1	20	22	10.39	36	41	10	36	49.5	35.5
BBTM-28-08R	28	1	22	22	10.39	41	46	10	41	55	39.5
BBTM-30-08R	30	1	25	22	10.39	41	46	10	41	55.5	39.5
BBTM-30-10R	30	1-1/4	25	31	12.7	46	46	10	46	60.5	42.5
BBTM-32-10R	32	1-1/4	26	31	12.7	46	50	11	46	60.5	43.5
BBTM-35-10R	35	1-1/4	28	31	12.7	46	55	11	46	63.5	45.5
BBTM-38-12R	38	1-1/2	32	36	12.7	50	60	12	50	69.5	48.5
BBTM-40-12R	40	1-1/2	32	36	12.7	55	60	12	55	74.5	49.5
BBTM-06A-02R	10.5	1/4	8	7	6.01	17	19	7	23	34.5	19
BBTM-08A-03R	13.8	3/8	11	9	6.35	22	24	7.5	28	40	22.5
BBTM-10A-04R	17.3	1/2	14	12	8.16	27	32	8	32	44.5	30
BBTM-15A-06R	21.7	3/4	18	16	9.53	32	36	9	34	46.5	32.5
BBTM-20A-08R	27.2	1	22	22	10.39	41	46	10	41	55	39.5
BBTM-25A-10R	34.0	1-1/4	28	31	12.7	46	55	11	46	63.5	45.5
BBTM-32A-12R	42.7	1-1/2	34	36	12.7	60	65	12	57	77.5	51.5
BBTM-40A-16R	48.6	2	40	46	15.88	65	75	12	62	83.5	58

Male Run Tee

BRTM

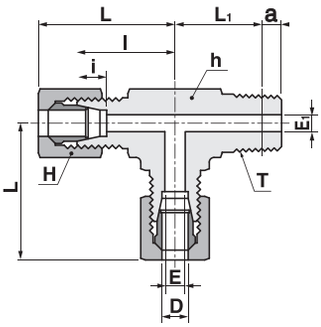

Part No.	Tube O.D D	PT T	E	E_1	Basic Gauge length a	Width across flat h	Width across flat H	i	l	Approx L	Approx L_1
BRTM-06-01R	6	1/8	4	4	3.97	14	14	7	20	30.5	14
BRTM-06-02R	6	1/4	4	7	6.01	17	14	7	23	33.5	17
BRTM-08-01R	8	1/8	6	4	3.97	17	17	7	23	33.5	16
BRTM-08-02R	8	1/4	6	7	6.01	17	17	7	23	33.5	18
BRTM-10-02R	10	1/4	8	7	6.01	17	19	7	23	34.5	19
BRTM-10-03R	10	3/8	8	9	6.35	19	19	7	24	35.5	19.5
BRTM-12-02R	12	1/4	10	7	6.01	19	22	7	24	35.5	20
BRTM-12-03R	12	3/8	10	9	6.35	19	22	7	24	35.5	20.5
BRTM-15-03R	15	3/8	12	9	6.35	24	27	7.5	29	41.5	23.5
BRTM-15-04R	15	1/2	12	12	8.16	24	27	7.5	29	41.5	26
BRTM-16-04R	16	1/2	13	12	8.16	27	30	7.5	32	44.5	27
BRTM-18-04R	18	1/2	14	12	8.16	27	32	8	32	44.5	30
BRTM-20-06R	20	3/4	17	16	9.53	30	36	8	33	45.5	30.5
BRTM-22-06R	22	3/4	18	16	9.53	32	36	9	34	46.5	32.5
BRTM-25-06R	25	3/4	20	16	9.53	36	41	10	36	49.5	33.5
BRTM-25-08R	25	1	20	22	10.39	36	41	10	36	49.5	35.5
BRTM-28-08R	28	1	22	22	10.39	41	46	10	41	55	39.5
BRTM-30-08R	30	1	25	22	10.39	41	46	10	41	55.5	39.5
BRTM-30-10R	30	1-1/4	25	31	12.7	46	46	10	46	60.5	42.5
BRTM-32-10R	32	1-1/4	26	31	12.7	46	50	11	46	60.5	43.5
BRTM-35-10R	35	1-1/4	28	31	12.7	46	55	11	46	63.5	45.5
BRTM-38-12R	38	1-1/2	32	36	12.7	50	60	12	50	69.5	48.5
BRTM-40-12R	40	1-1/2	32	36	12.7	55	60	12	55	74.5	49.5
BRTM-06A-02R	10.5	1/4	8	7	6.01	17	19	7	23	34.5	19
BRTM-08A-03R	13.8	3/8	11	9	6.35	22	24	7.5	28	40	22.5
BRTM-10A-04R	17.3	1/2	14	12	8.16	27	32	8	32	44.5	30
BRTM-15A-06R	21.7	3/4	18	16	9.53	32	36	9	34	46.5	32.5
BRTM-20A-08R	27.2	1	22	22	10.39	41	46	10	41	55	39.5
BRTM-25A-10R	34.0	1-1/4	28	31	12.7	46	55	11	46	63.5	45.5
BRTM-32A-12R	42.7	1-1/2	34	36	12.7	60	65	12	57	77.5	51.5
BRTM-40A-16R	48.6	2	40	46	15.88	65	75	12	62	83.5	58

Bulkhead Female Connector

BBFC

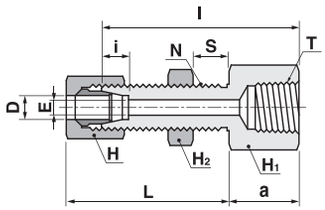

Part No.	Tube O.D D	PT T	E	Width across flat H_2	Width across flat H_1	Width across flat H	i	l	a	Approx L	Panel Hole Drill Size N	Max.Panel Thickness S
BBFC-06-01R	6	1/8	4	17	17	14	7	45	13	42.5	12.5	13
BBFC-08-02R	8	1/4	6	19	19	17	7	50	18	42.5	14.5	13
BBFC-10-02R	10	1/4	8	22	19	19	7	50	18	43.5	16.5	13
BBFC-10-03R	10	3/8	8	22	24	19	7	52	20	43.5	16.5	13
BBFC-12-02R	12	1/4	10	24	19	22	7	50	18	43.5	18.5	13
BBFC-12-03R	12	3/8	10	24	24	22	7	52	20	43.5	18.5	13
BBFC-15-03R	15	3/8	12	27	27	27	7.5	57	20	49.5	22.5	15
BFCB-15-04R	15	1/2	12	27	30	27	7.5	62	25	49.5	22.5	15
BBFC-16-04R	16	1/2	13	30	30	30	7.5	62	25	49.5	24.5	15
BBFC-18-04R	18	1/2	14	32	30	32	8	64	25	51.5	16.5	15
BBFC-20-06R	20	3/4	17	32	36	36	8	66	27	51.5	28.5	15
BBFC-22-06R	22	3/4	18	36	36	36	9	66	27	51.5	30.5	15
BBFC-25-08R	25	1	20	41	46	41	10	70	31	52.5	35.5	15
BBFC-28-08R	28	1	22	46	46	46	10	72	31	55	38.5	15
BBFC-30-08R	30	1	25	46	46	46	10	72	31	55.5	40.5	15
BBFC-32-10R	32	1-1/4	26	46	55	50	11	78	35	57.5	42.5	15

Female Connector

BFC

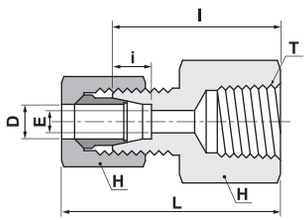

Part No.	Tube O.D D	PT T	E	Width across flat H_1	Width across flat H	i	l	Approx L
BFC-06-01R	6	1/8	4	17	14	7	25	35.5
BFC-08-02R	8	1/4	6	19	17	7	30	40.5
BFC-10-02R	10	1/4	8	19	19	7	30	41.5
BFC-10-03R	10	3/8	8	24	19	7	32	43.5
BFC-12-02R	12	1/4	10	19	22	7	30	41.5
BFC-12-03R	12	3/8	10	24	22	7	32	43.5
BFC-15-03R	15	3/8	12	24	27	7.5	34	46.5
BFC-15-04R	15	1/2	12	30	27	7.5	39	51.5
BFC-16-04R	16	1/2	13	30	30	7.5	39	51.5
BFC-18-04R	18	1/2	14	30	32	8	39	51.5
BFC-20-06R	20	3/4	17	36	36	8	41	53.5
BFC-22-06R	22	3/4	18	36	36	9	41	53.5
BFC-25-06R	25	3/4	20	36	41	10	41	54.5
BFC-25-08R	25	1	20	46	41	10	45	58.5
BFC-28-08R	28	1	22	46	46	10	47	61
BFC-30-08R	30	1	25	46	46	10	47	61.5
BFC-30-10R	30	1-1/4	25	55	46	10	51	65.5
BFC-32-10R	32	1-1/4	26	55	50	11	51	65.5
BFC-35-10R	35	1-1/4	28	55	55	11	51	68.5
BFC-38-12R	38	1-1/2	32	65	60	12	51	70.5
BFC-40-12R	40	1-1/2	32	65	60	12	55	74.5
BFC-42-12R	42	1-1/2	34	65	60	12	55	74.5
BFC-06A-02R	10.5	1/4	8	19	19	7	30	41.5
BFC-08A-03R	13.8	3/8	11	24	24	7.5	34	46
BFC-10A-04R	17.3	1/2	14	30	32	8	39	51.5
BFC-15A-06R	21.7	3/4	18	36	36	9	41	53.5
BFC-20A-08R	27.2	1	22	46	46	10	47	61
BFC-25A-10R	34.0	1-1/4	28	55	55	11	51	68.5
BFC-32A-12R	42.7	1-1/2	34	65	65	12	55	78.5
BFC-40A-16R	48.6	2	40	80	75	12	60	81.5

Gauge Connector

BGC

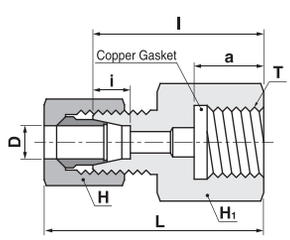

Part No.	Tube O.D D	PF T	a	Width across flat H_1	Width across flat H	i	l	Approx L
BGC-06-02G	6	1/4	14	19	14	7	32	42.5
BGC-06-03G	6	3/8	15	24	14	7	34	44.5
BGC-06-04G	6	1/2	16	30	14	7	36	46.5
BGC-08-02G	8	1/4	14	19	17	7	32	42.5
BGC-08-03G	8	3/8	15	24	17	7	34	44.5
BGC-08-04G	8	1/2	16	30	17	7	36	46.5
BGC-10-02G	10	1/4	14	19	19	7	32	43.5
BGC-10-03G	10	3/8	15	24	19	7	34	45.5
BGC-10-04G	10	1/2	16	30	19	7	36	47.5
BGC-12-02G	12	1/4	14	19	22	7	32	43.5
BGC-12-03G	12	3/8	15	24	22	7	34	45.5
BGC-12-04G	12	1/2	16	30	22	7	36	47.5

Female Elbow

BLF

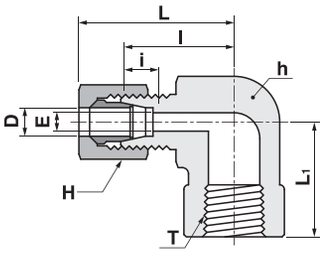

Part No.	Tube O.D	PT	E	Width across flat		i	l	Approx	
	D	T		H_1	H			L_1	L
BLF-08-02R	8	1/4	6	19	17	7	24	24	34.5
BLF-10-02R	10	1/4	8	19	19	7	24	24	35.5
BLF-12-02R	12	1/4	10	19	22	7	24	24	35.5
BLF-12-03R	12	3/8	10	24	22	7	29	29	40.5
BLF-15-03R	15	3/8	12	24	27	7.5	29	29	41.5
BLF-15-04R	15	1/2	12	30	27	7.5	33	33	45.5
BLF-16-04R	16	1/2	13	30	30	7.5	33	33	45.5
BLF-18-04R	18	1/2	14	30	32	8	33	33	45.5
BLF-20-06R	20	3/4	17	36	36	8	36	36	48.5
BLF-22-06R	22	3/4	18	36	36	9	36	36	48.5
BLF-25-06R	25	3/4	20	36	41	10	36	36	49.5
BLF-25-08R	25	1	20	46	41	10	36	46	59.5
BLF-28-08R	28	1	22	46	46	10	46	46	60
BLF-30-10R	30	1-1/4	25	55	46	10	55	55	69.5
BLF-32-10R	32	1-1/4	26	55	50	11	55	55	69.5
BLF-35-10R	35	1-1/4	28	55	55	11	55	55	72.5

Female Branch Tee

BBTF

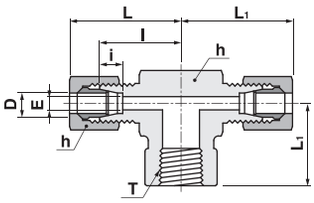

Part No.	Tube O.D	PT	E	Width across flat		i	l	Approx	
	D	T		h	H			L	L_1
BBTF-06-01R	6	1/8	4	17	14	7	23	34.5	24
BBTF-08-02R	8	1/4	6	19	17	7	24	34.5	24
BBTF-10-02R	10	1/4	8	19	19	7	24	35.5	24
BBTF-12-02R	12	1/4	10	19	22	7	24	35.5	24
BBTF-12-03R	12	3/8	10	24	22	7	29	40.5	29
BBTF-15-03R	15	3/8	12	24	27	7.5	29	41.5	29
BBTF-15-04R	15	1/2	12	30	27	7.5	33	45.5	33
BBTF-16-04R	16	1/2	13	30	30	7.5	33	45.5	33
BBTF-18-04R	18	1/2	14	30	32	8	33	45.5	33
BBTF-20-06R	20	3/4	17	36	36	8	36	48.5	36
BBTF-22-06R	22	3/4	18	36	36	9	36	48.5	36
BBTF-25-06R	25	3/4	20	36	41	10	36	49.5	36
BBTF-25-08R	25	1	20	46	41	10	46	59.5	46
BBTF-28-08R	28	1	22	46	46	10	46	60	46
BBTF-30-08R	30	1	25	46	46	10	46	60.5	46
BBTF-30-10R	30	1-1/4	25	55	46	10	55	69.5	55
BBTF-32-10R	32	1-1/4	26	55	50	11	55	69.5	55
BBTF-35-10R	35	1-1/4	28	55	55	11	55	72.5	55
BBTF-06A-02R	10.5	1/4	8	19	19	7	24	35.5	24
BBTF-08A-03R	13.8	3/8	11	24	24	7.5	29	41	29
BBTF-10A-04R	17.3	1/2	14	30	32	8	33	45.5	33
BBTF-15A-06R	21.7	3/4	18	36	36	9	36	48.5	36
BBTF-20A-08R	27.2	1	22	46	46	10	46	60	46
BBTF-25A-10R	34.0	1-1/4	28	55	55	11	55	72.5	55

Female Run Tee

BRTF

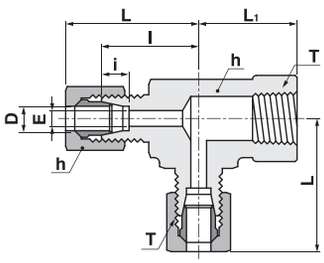

Part No.	Tube O.D	PT	E	Width across flat		i	l	Approx	
	D	T		h	H			L	L_1
BRTF-06-01R	6	1/8	4	17	14	7	23	34.5	24
BRTF-08-02R	8	1/4	6	19	17	7	24	34.5	24
BRTF-10-02R	10	1/4	8	19	19	7	24	35.5	24
BRTF-12-02R	12	1/4	10	19	22	7	24	35.5	24
BRTF-12-03R	12	3/8	10	24	22	7	29	40.5	29
BRTF-15-03R	15	3/8	12	24	27	7.5	29	41.5	29
BRTF-15-04R	15	1/2	12	30	27	7.5	33	45.5	33
BRTF-16-04R	16	1/2	13	30	30	7.5	33	45.5	33
BRTF-18-04R	18	1/2	14	30	32	8	33	45.5	33
BRTF-20-06R	20	3/4	17	36	36	8	36	48.5	36
BRTF-22-06R	22	3/4	18	36	36	9	36	48.5	36
BRTF-25-06R	25	3/4	20	36	41	10	36	49.5	36
BRTF-25-08R	25	1	20	46	41	10	46	59.5	46
BRTF-28-08R	28	1	22	46	46	10	46	60	46
BRTF-30-08R	30	1	25	46	46	10	46	60.5	46
BRTF-30-10R	30	1-1/4	25	55	46	10	55	69.5	55
BRTF-32-10R	32	1-1/4	26	55	50	11	55	69.5	55
BRTF-35-10R	35	1-1/4	28	55	55	11	55	72.5	55
BRTF-06A-02R	10.5	1/4	8	19	19	7	24	35.5	24
BRTF-08A-03R	13.8	3/8	11	24	24	7.5	29	41	29
BRTF-10A-04R	17.3	1/2	14	30	32	8	33	45.5	33
BRTF-15A-06R	21.7	3/4	18	36	36	9	36	48.5	36
BRTF-20A-08R	27.2	1	22	46	46	10	46	60	46
BRTF-25A-10R	34.0	1-1/4	28	55	55	11	55	72.5	55

Preswaging Tool

BPST

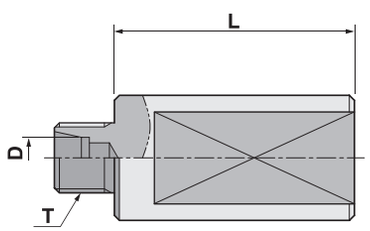

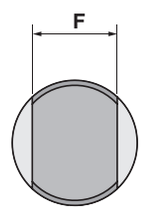

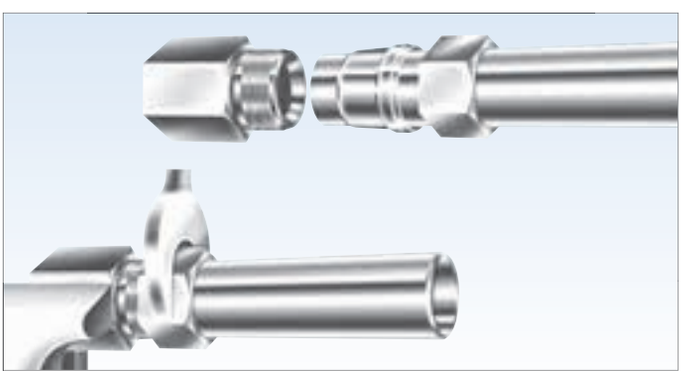

When assembling Bite type fitting in close corner or in cabinet it may be advantageous to use this jig. It allows presetting sleeve on to the tube in a more open or safe area. After using this jig, follow the reassembly instruction.

Tubing may occasionally stick in the jig after pull-up. When this happens, loosen the tube by gently rocking back and forth. Do not rock up and down or turn the tube as this may damage sealing surfaces of fitting.

Part No.	Tube O.D	L	F	T
	D			
BPST-06	6	40	17	M12 x 1.5
BPST-08	8	40	17	M14 x 1.5
BPST-10	10	40	17	M16 x 1.5
BPST-12	12	40	27	M18 x 1.5
BPST-15	15	40	27	M22 x 1.5
BPST-16	16	40	27	M24 x 1.5
BPST-18	18	40	27	M26 x 1.5
BPST-20	20	40	41	M28 x 1.5
BPST-22	22	40	41	M30 x 1.5
BPST-25	25	40	41	M35 x 1.5
BPST-06A	10.5	40	17	M16 x 1.5
BPST-08A	13.8	40	27	M20 x 1.5
BPST-10A	17.3	40	27	M26 x 1.5
BPST-15A	21.7	40	41	M30 x 1.5

Cap

BC

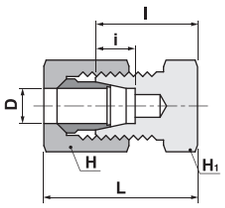

Part No.	Tube O.D D	Width across flat H_1	Width across flat H	i	l	Approx L
BC-06	6	14	14	7	18	28.5
BC-08	8	17	17	7	19	29.5
BC-10	10	17	19	7	20	31.5
BC-12	12	19	22	7	20	31.5
BC-15	15	24	27	7.5	22	34.5
BC-16	16	27	30	7.5	24	36.5
BC-18	18	27	32	8	24	36.5
BC-20	20	30	36	8	24	36.5
BC-22	22	32	36	9	25	37.5
BC-25	25	36	41	10	25	38.5
BC-28	28	41	46	10	28	42
BC-30	30	41	46	10	28	42.5
BC-32	32	46	50	11	30	44.5

Plug

BP

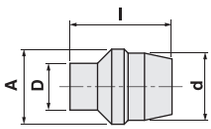

Part No.	Tube O.D D	E	A	l
BP-06	6	8	9	13.5
BP-08	8	10	11	13.5
BP-10	10	12	13	14.5
BP-12	12	14	15	14.5
BP-15	15	17	18	16
BP-16	16	18	19	16
BP-18	18	20	21	17.5
BP-20	20	22	23	17.5
BP-22	22	24	25	17.5
BP-25	25	27.4	28.5	19
BP-28	28	30.4	31.5	19
BP-30	30	32.4	33.5	20
BP-32	32	34.4	35.5	20

Cap for tube end

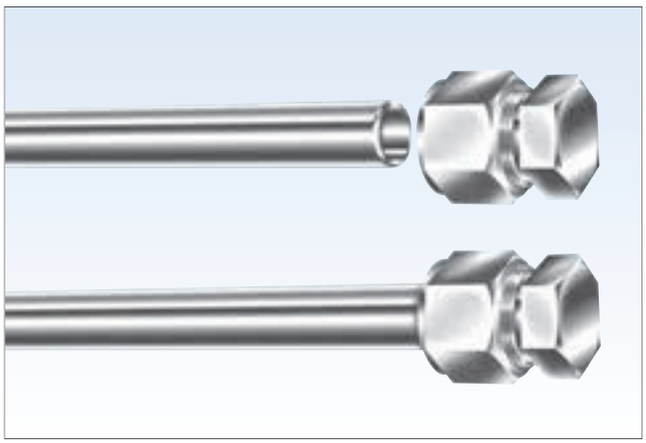

Plug for unused Bite type fitting port

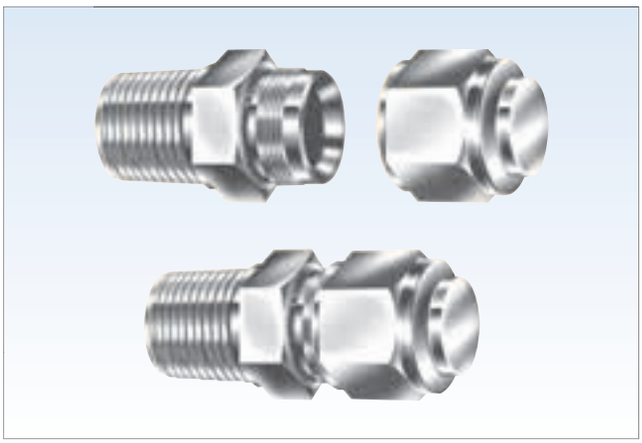

Nut

BN

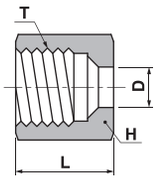

Part No.	Tube O.D D	T	Width across flat H	L
BN-06	6	M12 x 1.5	14	15
BN-08	8	M14 x 1.5	17	15
BN-10	10	M16 x 1.5	19	16
BN-12	12	M18 x 1.5	22	16
BN-15	15	M22 x 1.5	27	19
BN-16	16	M24 x 1.5	30	19
BN-18	18	M26 x 1.5	32	19
BN-20	20	M28 x 1.5	36	19
BN-22	22	M30 x 1.5	36	19
BN-25	25	M35 x 1.5	41	20
BN-28	28	M38 x 1.5	46	21
BN-30	30	M40 x 1.5	46	22
BN-32	32	M42 x 1.5	50	22
BN-35	35	M45 x 1.5	55	25
BN-38	38	M48 x 1.5	60	27
BN-40	40	M52 x 2.0	60	29.5
BN-42	42	M52 x 2.0	60	29.5
BN-06A	10.5	M16 x 1.5	19	16
BN-08A	13.8	M20 x 1.5	24	18
BN-10A	17.3	M26 x 1.5	32	19
BN-15A	21.7	M30 x 1.5	36	19
BN-20A	27.2	M38 x 1.5	46	21
BN-25A	34.0	M45 x 1.5	55	25
BN-32A	42.7	M56 x 2.0	65	30.5
BN-40A	48.6	M64 x 2.0	75	31.5

Sleeve

BS

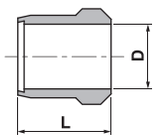

Part No.	Tube O.D D	L
BS-06	6	9
BS-08	8	9
BS-10	10	10
BS-12	12	10
BS-15	15	10
BS-16	16	10
BS-18	18	10
BS-20	20	10
BS-22	22	10
BS-25	25	11
BS-28	28	11
BS-30	30	11
BS-32	32	11
BS-35	35	14
BS-38	38	14
BS-40	40	14
BS-42	42	14
BS-06A	10.5	10
BS-08A	13.8	10
BS-10A	17.3	10
BS-15A	21.7	10
BS-20A	27.2	11
BS-25A	34.0	14
BS-32A	42.7	14
BS-40A	48.6	14

Hose Male Union

BHUM

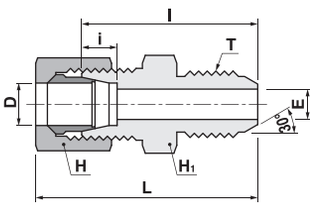

Part No.	Tube O.D D	PF T	E	Width across flat H_1	Width across flat H	i	l	L
BHUM-06-01G	6	1/8	4	14	14	7	34	44.5
BHUM-08-02G	8	1/4	6	17	17	7	35	45.5
BHUM-08-03G	8	3/8	6	19	17	7	37	47.5
BHUM-10-02G	10	1/4	6	17	19	7	35	46.5
BHUM-10-03G	10	3/8	8	19	19	7	37	48.5
BHUM-10-04G	10	1/2	8	22	19	7	40	51.5
BHUM-12-02G	12	1/4	6	19	22	7	35	46.5
BHUM-12-03G	12	3/8	9	19	22	7	37	48.5
BHUM-12-04G	12	1/2	10	22	22	7	40	51.5
BHUM-15-03G	15	3/8	9	24	27	7.5	40	52.5
BHUM-15-04G	15	1/2	12	24	27	7.5	42	54.5
BHUM-16-03G	16	3/8	9	27	30	7.5	40	52.5
BHUM-16-04G	16	1/2	12	27	30	7.5	42	54.5
BHUM-18-04G	18	1/2	12	27	32	8	42	54.5
BHUM-20-06G	20	3/4	16	30	36	8	46	58.5
BHUM-22-04G	22	1/2	12	32	36	9	44	56.5
BHUM-22-06G	22	3/4	16	32	36	9	46	58.5
BHUM-25-06G	25	3/4	16	36	41	10	47	60.5
BHUM-25-08G	25	1	20	36	41	10	49	62.5
BHUM-28-06G	28	3/4	16	41	46	10	49	63
BHUM-28-08G	28	1	22	41	46	10	51	65
BHUM-30-06G	30	3/4	16	41	46	10	49	63.5
BHUM-30-08G	30	1	22	41	46	10	51	65.5
BHUM-32-08G	32	1	22	46	50	11	52	66.5
BHUM-32-10G	32	1-1/4	28	46	50	11	56	70.5

Hose Female Union

BHUF

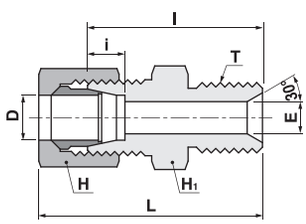

Part No.	Tube O.D D	PF T	E	Width across flat H_1	Width across flat H	i	l	L
BHUF-06-01G	6	1/8	4	14	14	7	32	43.5
BHUF-08-02G	8	1/4	6	17	17	7	33	43.5
BHUF-08-03G	8	3/8	6	19	17	7	34	44.5
BHUF-10-02G	10	1/4	6	17	19	7	33	44.5
BHUF-10-03G	10	3/8	8	19	19	7	34	45.5
BHUF-10-04G	10	1/2	8	22	19	7	38	49.5
BHUF-12-02G	12	1/4	6	19	22	7	33	44.5
BHUF-12-03G	12	3/8	9	19	22	7	34	45.5
BHUF-12-04G	12	1/2	10	22	22	7	38	49.5
BHUF-15-03G	15	3/8	9	24	27	7.5	37	49.5
BHUF-15-04G	15	1/2	12	24	27	7.5	40	52.5
BHUF-16-03G	16	3/8	9	27	30	7.5	37	493.5
BHUF-16-04G	16	1/2	12	27	30	7.5	40	52.5
BHUF-18-04G	18	1/2	12	27	32	8	40	52.5
BHUF-20-06G	20	3/4	16	30	36	8	43	55.5
BHUF-22-04G	22	1/2	12	32	36	9	42	54.5
BHUF-22-06G	22	3/4	16	32	36	9	43	55.5
BHUF-25-06G	25	3/4	16	36	41	10	44	57.5
BHUF-25-08G	25	1	20	36	41	10	46	59.5
BHUF-28-06G	28	3/4	16	41	46	10	46	60
BHUF-28-08G	28	1	22	41	46	10	48	62
BHUF-30-06G	30	3/4	16	41	46	10	46	60.5
BHUF-30-08G	30	1	22	41	46	10	48	62.5
BHUF-32-08G	32	1	22	46	50	11	49	63.5
BHUF-32-10G	32	1-1/4	28	46	50	11	55	69.5
BHUF-38-12G	38	1-1/2	32	50	60	12	57	76.5
BHUF-40-12G	40	1-1/2	32	55	60	12	62	81.5

Hose Bulkhead
Male Union

BHBM

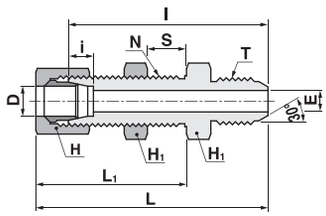

Part No.	Tube O.D D	PF T	E	Width across flat H_1	Width across flat H	i	l	L_1	L	Panel Hole Drill Size N	Max.Panel Thickness S
BHBM-06-01G	6	1/8	4	17	14	7	54	42.5	63.5	12.5	13
BHBM-08-02G	8	1/4	6	19	17	7	55	42.5	65.5	14.5	13
BHBM-08-03G	8	3/8	6	19	17	7	57	42.5	67.5	14.5	13
BHBM-10-02G	10	1/4	6	22	19	7	56	43.5	67.5	16.5	13
BHBM-10-03G	10	3/8	8	22	19	7	58	43.5	69.5	16.5	13
BHBM-10-04G	10	1/2	8	22	19	7	60	43.5	71.5	16.5	13
BHBM-12-02G	12	1/4	6	24	22	7	56	43.5	67.5	18.5	13
BHBM-12-03G	12	3/8	9	24	22	7	58	43.5	69.5	18.5	13
BHBM-12-04G	12	1/2	10	24	22	7	60	43.5	71.5	18.5	13
BHBM-15-03G	15	3/8	9	27	27	7.5	63	49.5	75.5	22.5	15
BHBM-15-04G	15	1/2	12	27	27	7.5	65	49.5	77.5	22.5	15
BHBM-16-03G	16	3/8	9	30	30	7.5	65	49.5	77.5	24.5	15
BHBM-16-04G	16	1/2	12	30	30	7.5	67	49.5	79.5	24.5	15
BHBM-18-04G	18	1/2	12	32	32	8	69	51.5	81.5	26.5	15
BHBM-20-06G	20	3/4	16	32	36	8	71	51.5	83.5	28.5	15
BHBM-22-04G	22	1/2	12	36	36	9	70	51.5	82.5	30.5	15
BHBM-22-06G	22	3/4	16	36	36	9	72	51.5	84.5	30.5	15
BHBM-25-06G	25	3/4	16	41	41	10	72	52.5	87.5	35.5	15
BHBM-25-08G	25	1	20	41	41	10	74	52.5	89.5	35.5	15
BHBM-28-06G	28	3/4	16	46	46	10	75	55	89	38.5	15
BHBM-28-08G	28	1	22	46	46	10	77	55	91	38.5	15
BHBM-30-06G	30	3/4	16	46	46	10	75	55.5	89.5	40.5	15
BHBM-30-08G	30	1	22	46	46	10	77	55.5	91.5	40.5	15
BHBM-32-08G	32	1	22	50	50	11	81	57.5	95.5	42.5	15
BHBM-32-10G	32	1-1/4	28	50	50	11	85	57.5	99.5	42.5	15

Hose Bulkhead
Female Union

BHBF

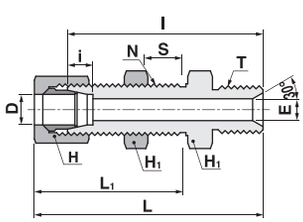

Part No.	Tube O.D D	PF T	E	Width across flat H_1	Width across flat H	i	l	L_1	L	Panel Hole Drill Size N	Max.Panel Thickness S
BHBF-06-01G	6	1/8	4	17	14	7	52	42.5	62.5	12.5	13
BHBF-08-02G	8	1/4	6	19	17	7	53	42.5	63.5	14.5	13
BHBF-08-03G	8	3/8	6	19	17	7	54	42.5	64.5	14.5	13
BHBF-10-02G	10	1/4	6	22	19	7	54	43.5	65.5	16.5	13
BHBF-10-03G	10	3/8	8	22	19	7	55	43.5	66.5	16.5	13
BHBF-10-04G	10	1/2	8	22	19	7	58	43.5	69.5	16.5	13
BHBF-12-02G	12	1/4	6	24	22	7	54	43.5	65.5	18.5	13
BHBF-12-03G	12	3/8	9	24	22	7	55	43.5	66.5	18.5	13
BHBF-12-04G	12	1/2	10	24	22	7	58	43.5	69.5	18.5	13
BHBF-15-03G	15	3/8	9	27	27	7.5	60	49.5	72.5	22.5	15
BHBF-15-04G	15	1/2	12	27	27	7.5	63	49.5	75.5	22.5	15
BHBF-16-03G	16	3/8	9	30	30	7.5	62	49.5	74.5	24.5	15
BHBF-16-04G	16	1/2	12	30	30	7.5	65	49.5	77.5	24.5	15
BHBF-18-04G	18	1/2	12	32	32	8	67	51.5	79.5	26.5	15
BHBF-20-06G	20	3/4	16	32	36	8	68	51.5	80.5	28.5	15
BHBF-22-04G	22	1/2	12	36	36	9	68	51.5	80.5	30.5	15
BHBF-22-06G	22	3/4	16	36	36	9	69	51.5	81.5	30.5	15
BHBF-25-06G	25	3/4	16	41	41	10	69	52.5	82.5	35.5	15
BHBF-25-08G	25	1	20	41	41	10	71	52.5	84.5	35.5	15
BHBF-28-08G	28	1	22	46	46	10	74	55	88	38.5	15
BHBF-30-06G	30	3/4	16	46	46	10	72	55.5	86.5	40.5	15
BHBF-30-08G	30	1	22	46	46	10	74	55.5	88.5	40.5	15
BHBF-32-08G	32	1	22	50	50	11	78	57.5	92.5	42.5	15
BHBF-32-10G	32	1-1/4	28	50	50	11	84	57.5	98.5	42.5	15
BHBF-38-12G	38	1-1/2	31	55	60	12	87	64.5	106.5	48.5	15
BHBF-40-12G	40	1-1/2	32	60	60	12	94	69.5	113.5	52.5	15

Hose Male Elbow

BHLM

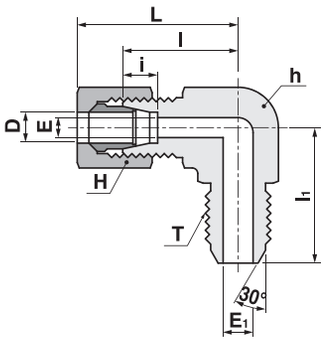

Part No.	Tube O.D D	PF T	E	E_1	Width across flat h	Width across flat H	i	l	l_1	L
BHLM-06-01G	6	1/8	4	4	14	14	7	20	25	33.5
BHLM-08-02G	8	1/4	6	6	17	17	7	23	25	33.5
BHLM-08-03G	8	3/8	6	9	19	17	7	24	28	34.5
BHLM-10-02G	10	1/4	8	6	19	19	7	24	28	35.5
BHLM-10-03G	10	3/8	8	9	19	19	7	24	28	35.5
BHLM-10-04G	10	1/2	8	12	24	19	7	29	34	40.5
BHLM-12-02G	12	1/4	10	6	19	22	7	24	28	35.5
BHLM-12-03G	12	3/8	10	9	19	22	7	24	28	35.5
BHLM-12-04G	12	1/2	10	12	24	22	7	29	34	40.5
BHLM-15-03G	15	3/8	12	9	24	27	7.5	29	33	41.5
BHLM-15-04G	15	1/2	12	12	24	27	7.5	29	34	41.5
BHLM-16-03G	16	3/8	13	9	27	30	7.5	32	36	44.5
BHLM-16-04G	16	1/2	13	12	27	30	7.5	32	38	44.5
BHLM-18-04G	18	1/2	14	12	27	32	8	32	38	44.5
BHLM-20-06G	20	3/4	17	16	30	36	8	33	41	45.5
BHLM-22-04G	22	1/2	18	12	32	36	9	34	40	46.5
BHLM-22-06G	22	3/4	18	16	32	36	9	34	42	46.5
BHLM-25-06G	25	3/4	20	16	36	41	10	36	44	49.5
BHLM-25-08G	25	1	20	20	36	41	10	36	46	49.5
BHLM-28-06G	28	3/4	22	16	41	46	10	41	47	55
BHLM-28-08G	28	1	22	22	41	46	10	41	49	55
BHLM-30-06G	30	3/4	25	16	41	46	10	41	47	55.5
BHLM-30-08G	30	1	25	22	41	46	10	41	49	55.5
BHLM-32-08G	32	1	26	22	46	50	11	46	54	60.5
BHLM-32-10G	32	1-1/4	26	28	46	50	11	46	56	60.5

Hose Female Elbow

BHLF

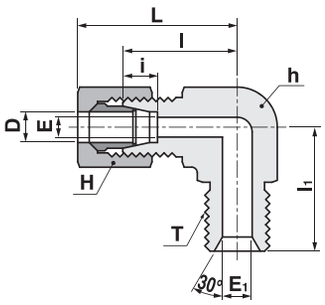

Part No.	Tube O.D D	PF T	E	E_1	Width across flat H_1	Width across flat H	i	l	l_1	L
BHLF-08-02G	8	1/4	6	6	17	17	7	23	25	33.5
BHLF-08-03G	8	3/8	6	9	19	17	7	24	27	34.5
BHLF-10-02G	10	1/4	8	6	19	19	7	24	26	35.5
BHLF-10-03G	10	3/8	8	9	19	19	7	24	27	35.5
BHLF-10-04G	10	1/2	8	12	24	19	7	29	23	40.5
BHLF-12-02G	12	1/4	10	6	19	22	7	24	26	35.5
BHLF-12-03G	12	3/8	10	9	19	22	7	24	27	35.5
BHLF-12-04G	12	1/2	10	12	24	22	7	29	33	40.5
BHLF-15-03G	15	3/8	12	9	24	27	7.5	29	30	41.5
BHLF-15-04G	15	1/2	12	12	24	27	7.5	29	33	41.5
BHLF-16-03G	16	3/8	13	9	27	30	7.5	32	33	44.5
BHLF-16-04G	16	1/2	13	12	27	30	7.5	32	36	44.5
BHLF-18-04G	18	1/2	14	12	27	32	8	32	36	44.5
BHLF-20-06G	20	3/4	17	16	30	36	8	33	38	45.5
BHLF-22-04G	22	1/2	18	12	32	36	9	34	38	46.5
BHLF-22-06G	22	3/4	18	16	32	36	9	34	39	46.5
BHLF-25-06G	25	3/4	20	16	36	41	10	36	41	49.5
BHLF-25-08G	25	1	20	20	36	41	10	36	43	49.5
BHLF-28-06G	28	3/4	22	16	41	46	10	41	44	55
BHLF-28-08G	28	1	22	22	41	46	10	41	46	55
BHLF-30-06G	30	3/4	25	16	41	46	10	41	44	55.5
BHLF-30-08G	30	1	25	22	41	46	10	41	46	55.5
BHLF-32-08G	32	1	26	22	46	50	11	46	51	60.5
BHLF-32-10G	32	1-1/4	26	28	46	50	11	46	57	60.5
BHLF-38-12G	38	1-1/2	32	34	50	60	12	50	61	69.5
BHLF-40-12G	40	1-1/2	32	34	55	60	12	55	62	74.5

Hose Bulkhead
Male Elbow

BHBLM

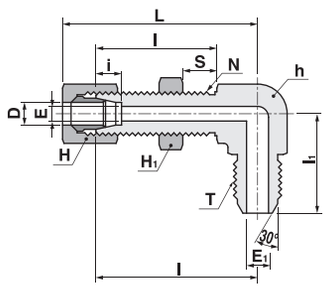

Part No.	Tube O.D D	PF T	E	E_1	Width across flat h	H_1	H	i	l	l_1	L_1	L	Panel Hole Drill Size N	Max.Panel Thickness S
BHBLM-06-01G	6	1/8	4	4	17	17	14	7	45	28	42.5	56.5	12.5	13
BHBLM-08-02G	8	1/4	6	6	19	19	17	7	46	28	42.5	56.5	14.5	13
BHBLM-08-03G	8	3/8	6	9	19	19	17	7	46	30	42.5	56.5	14.5	13
BHBLM-10-02G	10	1/4	6	6	22	22	19	7	48	28	43.5	59.5	16.5	13
BHBLM-10-03G	10	3/8	8	9	22	22	19	7	48	30	43.5	59.5	16.5	13
BHBLM-10-04G	10	1/2	8	12	24	22	19	7	49	35	43.5	60.5	16.5	13
BHBLM-12-02G	12	1/4	6	6	24	24	22	7	49	31	43.5	60.5	18.5	13
BHBLM-12-03G	12	3/8	9	9	24	24	22	7	49	33	43.5	60.5	18.5	13
BHBLM-12-04G	12	1/2	10	12	24	24	22	7	49	35	43.5	60.5	18.5	13
BHBLM-15-03G	15	3/8	9	9	27	27	27	7.5	57	36	49.5	69.5	22.5	15
BHBLM-15-04G	15	1/2	12	12	27	27	27	7.5	57	37	49.5	69.5	22.5	15
BHBLM-16-03G	16	3/8	9	9	30	30	30	7.5	59	37	49.5	71.5	24.5	15
BHBLM-16-04G	16	1/2	12	12	30	30	30	7.5	59	38	49.5	71.5	24.5	15
BHBLM-18-04G	18	1/2	12	12	32	32	32	8	63	39	51.5	75.5	26.5	15
BHBLM-20-06G	20	3/4	16	16	32	32	36	8	65	40	51.5	77.5	28.5	15
BHBLM-22-04G	22	1/2	12	12	36	36	36	9	65	40	51.5	77.5	30.5	15
BHBLM-22-06G	22	3/4	16	16	36	36	36	9	65	40	51.5	77.5	30.5	15
BHBLM-25-06G	25	3/4	16	16	41	41	41	10	68	43	52.5	81.5	35.5	15
BHBLM-25-08G	25	1	20	20	41	41	41	10	68	43	52.5	81.5	35.5	15
BHBLM-28-06G	28	3/4	16	16	46	46	46	10	74	48	55	88	38.5	15
BHBLM-28-08G	28	1	22	22	46	46	46	10	74	48	55	88	38.5	15
BHBLM-30-06G	30	3/4	16	16	46	46	46	10	74	48	55.5	88.5	40.5	15
BHBLM-30-08G	30	1	22	22	46	46	46	10	74	48	55.5	88.5	40.5	15

Hose Bulkhead
Female Elbow

BHBLF

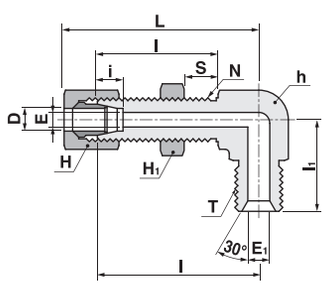

Part No.	Tube O.D D	PF T	E	E_1	Width across flat h	H_1	H	i	l	l_1	L_1	L	Panel Hole Drill Size N	Max.Panel Thickness S
BHBLF-06-01G	6	1/8	4	4	17	17	14	7	45	26	42.5	56.5	12.5	13
BHBLF-08-02G	8	1/4	6	6	19	19	17	7	46	26	42.5	56.5	14.5	13
BHBLF-08-03G	8	3/8	6	9	19	19	17	7	46	27	42.5	56.5	14.5	13
BHBLF-10-02G	10	1/4	6	6	22	22	19	7	48	28	43.5	59.5	16.5	13
BHBLF-10-03G	10	3/8	8	9	22	22	19	7	48	29	43.5	59.5	16.5	13
BHBLF-10-04G	10	1/2	8	12	22	22	19	7	49	33	43.5	60.5	16.5	13
BHBLF-12-02G	12	1/4	6	6	24	24	22	7	49	30	43.5	60.5	18.5	13
BHBLF-12-03G	12	3/8	9	9	24	24	22	7	49	30	43.5	60.5	18.5	13
BHBLF-12-04G	12	1/2	10	12	24	24	22	7	49	33	43.5	60.5	18.5	13
BHBLF-15-03G	15	3/8	9	9	27	27	27	7.5	57	33	49.5	69.5	22.5	15
BHBLF-15-04G	15	1/2	12	12	27	27	27	7.5	57	36	49.5	69.5	22.5	15
BHBLF-16-03G	16	3/8	9	9	30	30	30	7.5	59	34	49.5	71.5	24.5	15
BHBLF-16-04G	16	1/2	12	12	30	30	30	7.5	59	37	49.5	71.5	24.5	15
BHBLF-18-04G	18	1/2	12	121	32	32	32	8	63	37	51.5	75.5	26.5	15
BHBLF-20-06G	20	3/4	16	16	32	32	36	8	65	40	51.5	77.5	28.5	15
BHBLF-22-04G	22	1/2	12	12	36	36	36	9	65	40	51.5	77.5	30.5	15
BHBLF-22-06G	22	3/4	16	16	36	36	36	9	65	40	51.5	77.5	30.5	15
BHBLF-25-06G	25	3/4	16	16	41	41	41	10	68	43	52.5	81.5	35.5	15
BHBLF-25-08G	25	1	20	20	41	41	41	10	68	43	52.5	81.5	35.5	15
BHBLF-28-06G	28	3/4	22	16	46	46	46	10	74	48	55	88	38.5	15
BHBLF-28-08G	28	1	22	22	46	46	46	10	74	48	55	88	38.5	15
BHBLF-30-06G	30	3/4	16	16	46	46	46	10	74	48	55.5	88.5	40.5	15
BHBLF-30-08G	30	1	22	22	46	46	46	10	74	48	55.5	88.5	40.5	15

Welding Connector

BCW

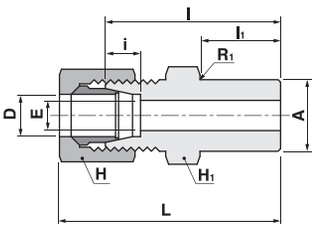

Part No.	Tube O.D D	A	E	Width across flat H_1	Width across flat H	i	l	l_1	L
BCW-06	6	12	4	14	14	7	29	11	39.5
BCW-08	8	14	6	17	17	7	34	15	44.5
BCW-10	10	16	8	17	19	7	34	15	45.5
BCW-12	12	18	10	19	22	7	34	15	45.5
BCW-15	15	21	12	24	27	7.5	40	18	52.5
BCW-16	16	22	13	27	30	7.5	44	22	56.5
BCW-18	18	25	14	27	32	8	44	22	56.5
BCW-20	20	28	17	30	36	8	46	22	58.5
BCW-22	22	28	18	32	36	9	46	22	58.5
BCW-25	25	33	20	36	41	10	51	26	64.5
BCW-28	28	36	22	41	46	10	55	28	69
BCW-30	30	39	25	41	46	10	55	28	69.5
BCW-32	32	40	26	46	50	11	56	28	70.5
BCW-35	35	43	28	46	55	11	56	28	73.5
BCW-38	38	45	32	50	60	12	58	28	77.5
BCW-40	40	46	32	55	60	12	65	30	84.5
BCW-06A	10.5	16	8	17	19	7	34	15	45.5
BCW-08A	13.8	19	11	22	24	7.5	40	18	52
BCW-10A	17.3	24	14	27	32	8	44	22	56.5
BCW-15A	21.7	28	18	32	36	9	46	22	58.5
BCW-20A	27.2	33	22	41	46	10	52	25	66
BCW-25A	34.0	40	28	46	55	11	56	28	73.5
BCW-32A	42.7	47	34	60	65	12	65	28	85.5
BCW-40A	48.6	55	40	65	75	12	70	30	91.5

Welding Bulkhead Union

BBUW

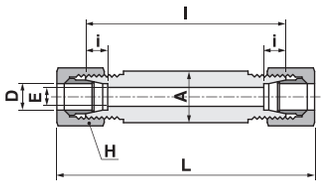

Part No.	Tube O.D D	A	E	Width across flat H	i	l	L
BBUW-06	6	16	4	14	7	74	95
BBUW-08	8	16	6	17	7	74	95
BBUW-10	10	19	8	19	7	74	97
BBUW-12	12	20	10	22	7	74	97
BBUW-15	15	25	12	27	7.5	78	103
BBUW-16	16	28	13	30	7.5	78	103
BBUW-18	18	28	14	32	8	78	103
BBUW-20	20	32	17	36	8	78	103
BBUW-22	22	32	18	36	9	78	103
BBUW-25	25	38	20	41	10	78	105
BBUW-28	28	39	22	46	10	82	110
BBUW-30	30	46	25	46	10	82	111
BBUW-32	32	46	26	50	11	82	111
BBUW-35	35	46	28	55	11	82	117
BBUW-38	38	55	32	60	12	82	121
BBUW-40	40	55	32	60	12	90	129
BBUW-06A	10.5	19	8	19	7	74	97
BBUW-08A	13.8	22	11	24	7.5	78	102
BBUW-10A	17.3	28	14	32	8	78	103
BBUW-15A	21.7	32	18	36	9	78	103
BBUW-20A	27.2	39	22	46	10	82	110
BBUW-25A	34.0	46	28	55	11	82	117
BBUW-32A	42.7	58	34	65	12	90	131
BBUW-40A	48.6	65	40	75	12	90	133

Adapter

BA-R

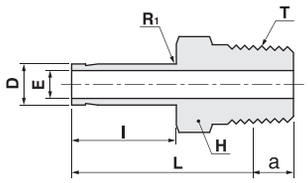

Part No.	Tube O.D D	PT T	E	Basic Gauge length a	Width across flat H	I	L
BA-06-01R	6	1/8	3	3.97	12	20	32
BA-08-02R	8	1/4	5	6.01	14	20	35
BA-10-02R	10	1/4	6	6.01	14	21	36
BA-10-03R	10	3/8	6	6.35	19	21	36.5
BA-12-02R	12	1/4	7	6.01	14	22	37
BA-12-03R	12	3/8	8	6.35	19	22	37.5
BA-15-03R	15	3/8	8	6.35	19	24	40.5
BA-15-04R	15	1/2	10	8.16	22	24	43
BA-16-04R	16	1/2	11	8.16	22	24	43
BA-18-04R	18	1/2	12	8.16	22	24	43
BA-20-06R	20	3/4	14	9.53	27	25	46.5
BA-22-06R	22	3/4	14	9.53	27	26	47.5
BA-25-06R	25	3/4	16	9.53	27	28	49.5
BA-25-08R	25	1	17	10.39	36	28	52.5
BA-28-08R	28	1	18	10.39	36	28	52.5
BA-30-08R	30	1	20	10.39	36	29	53.5
BA-30-10R	30	1-1/4	20	12.7	46	29	55
BA-32-10R	32	1-1/4	22	12.7	46	30	56
BA-38-12R	38	1-1/2	26	12.7	50	36	64.5
BA-40-12R	40	1-1/2	28	12.7	50	36	64
BA-06A-02R	10.5	1/4	6	6.01	14	21	36
BA-08A-03R	13.8	3/8	9	6.35	19	22	38.5
BA-10A-04R	17.3	1/2	11	8.16	22	24	43
BA-15A-06R	21.7	3/4	14	9.53	27	26	47.5
BA-20A-08R	27.2	1	18	10.39	36	28	52.5
BA-25A-10R	34.0	1-1/4	23	12.7	46	33	59
BA-32A-12R	42.7	1-1/2	29	12.7	50	36	67
BA-40A-16R	48.6	2	33	15.88	65	37	72

Adapter
(For Bonded Seal Gasket)

BA-G

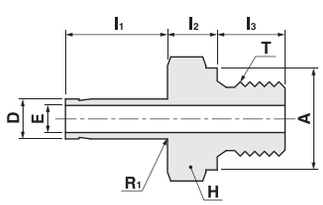

Part No.	Tube O.D D	PF T	E	Width across flat H	A	l_1	l_2	l_3
BA-06-01G	6	1/8	3	14	14	20	8	8
BA-08-02G	8	1/4	5	19	18	20	9	12
BA-10-02G	10	1/4	6	19	18	21	9	12
BA-10-03G	10	3/8	6	22	21.5	21	10	12
BA-12-02G	12	1/4	7	19	18	22	9	12
BA-12-03G	12	3/8	8	22	21.5	22	10	12
BA-15-03G	15	3/8	8	22	21.5	24	10	12
BA-15-04G	15	1/2	10	27	25.5	24	13	14
BA-16-04G	16	1/2	11	27	25.5	24	13	14
BA-18-04G	18	1/2	12	27	25.5	24	13	14
BA-20-06G	20	3/4	14	32	31.5	25	16	16
BA-22-06G	22	3/4	14	32	31.5	26	16	16
BA-25-06G	25	3/4	16	32	31.5	28	16	16
BA-25-08G	25	1	17	41	38	28	18	18
BA-28-08G	28	1	18	41	38	28	18	18
BA-30-08G	30	1	20	41	38	29	21	18
BA-30-10G	30	1-1/4	20	50	48.5	29	21	20
BA-32-10G	32	1-1/4	22	50	48.5	30	21	20
BA-38-12G	38	1-1/2	26	55	53.5	36	21	21
BA-40-12G	40	1-1/2	28	55	53.5	36	21	21
BA-06A-02G	10.5	1/4	6	19	18	21	9	12
BA-08A-03G	13.8	3/8	9	22	21.5	22	10	12
BA-10A-04G	17.3	1/2	11	27	25.5	24	13	14
BA-15A-06G	21.7	3/4	14	32	31.5	26	16	16
BA-20A-08G	27.2	1	18	41	38	28	18	18
BA-25A-10G	34.0	1-1/4	23	50	48.5	33	21	20
BA-32A-12G	42.7	1-1/2	29	55	53.5	36	23	21
BA-40A-16G	48.6	2	33	70	66	37	28	24

Reducer

BR

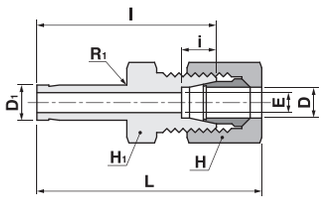

Part No.	Tube O.D		E	Width across flat		i	l	L
	D_1	D		H_1	H			
BR-08-06	8	6	4	14	14	7	39	49.5
BR-10-06	10	6	4	14	14	7	40	50.5
BR-10-08	10	8	6	17	17	7	40	50.5
BR-12-06	12	6	4	14	14	7	41	51.5
BR-12-08	12	8	6	17	17	7	41	51.5
BR-12-10	12	10	8	17	19	7	41	52.5
BR-15-08	15	8	6	17	17	7	43	53.5
BR-15-10	15	10	8	17	19	7	43	54.5
BR-16-06	16	6	4	17	14	7	43	53.5
BR-16-10	16	10	8	17	19	7	43	54.5
BR-16-12	16	12	10	19	22	7	43	54.5
BR-18-10	18	10	8	19	19	7	44	55.5
BR-18-15	18	15	12	24	27	7.5	45	57.5
BR-20-06	20	6	4	22	14	7	45	55.5
BR-20-12	20	12	10	22	22	7	45	56.5
BR-20-16	20	16	13	27	30	7.5	47	59.5
BR-22-15	22	15	12	24	27	7.5	48	60.5
BR-22-18	22	18	14	27	32	8	48	60.5
BR-25-16	25	16	13	27	30	7.5	50	62.5
BR-25-20	25	20	17	30	36	8	52	64.5
BR-28-18	28	18	14	30	32	8	52	64.5
BR-28-22	28	22	18	32	36	9	52	64.5
BR-30-20	30	20	17	32	36	8	53	65.5
BR-30-25	30	25	20	36	41	10	54	67.5
BR-32-25	32	25	20	36	41	10	55	68.5
BR-35-22	35	22	18	36	36	9	58	70.5
BR-35-28	35	28	22	41	46	10	60	74
BR-38-25	38	25	20	41	41	10	61	74.5
BR-38-30	38	30	25	41	46	10	63	77.5
BR-08A-6A	13.8	10.5	8	17	19	7	41	52.5
BR-10A-6A	17.3	10.5	8	19	19	7	44	55.5
BR-10A-8A	17.3	13.8	11	22	24	7.5	46	58
BR-15A-8A	21.7	13.8	11	24	24	7.5	48	60
BR-15A-10A	21.7	17.3	14	27	32	8	48	60.5
BR-20A-10A	27.2	17.3	14	30	32	8	52	64.5
BR-20A-15A	27.2	21.7	18	32	36	9	52	64.5
BR-25A-15A	34	21.7	18	36	36	9	58	70.5
BR-25A-20A	34	27.2	22	41	46	10	60	74

Positionable Elbow

BLA

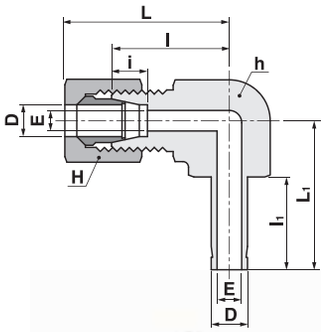

Part No.	Tube O.D	E	Width across flat		i	l	l_1	L_1	L
	D		h	H					
BLA-10	10	8	17	19	7	23	21	34.5	35
BLA-12	12	10	19	22	7	24	22	35.5	36
BLA-15	15	12	24	27	7.5	29	24	44.5	40
BLA-16	16	13	27	30	7.5	32	24	44.5	43
BLA-18	18	14	27	32	8	32	24	44.5	43
BLA-20	20	17	30	36	8	33	25	45.5	45
BLA-22	22	18	32	36	9	34	26	46.5	46
BLA-25	25	20	36	41	10	36	28	49.5	48
BLA-28	28	22	41	46	10	41	28	55	53
BLA-30	30	25	41	46	10	41	29	55.5	54
BLA-32	32	26	46	50	11	50	30	64.5	66
BLA-38	38	32	50	60	12	50	36	69.5	72

Positionable
Branch Tee

BBTA

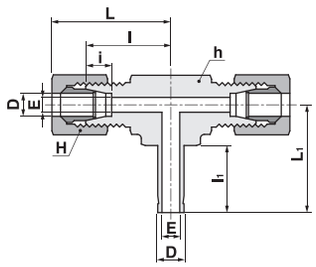

Part No.	Tube O.D D	E	E_1	Width across flat h	Width across flat H	i	l	l_1	L	L_1
BBTA-10	10	8	6	17	19	7	23	21	34.5	35
BBTA-12	12	10	8	19	22	7	24	22	35.5	37
BBTA-15	15	12	10	24	27	7.5	29	24	44.5	43
BBTA-16	16	13	11	27	30	7.5	32	24	44.5	43
BBTA-18	18	14	12	27	32	8	32	24	44.5	43
BBTA-20	20	17	14	30	36	8	33	25	45.5	45
BBTA-22	22	18	14	32	36	9	34	26	46.5	46
BBTA-25	25	20	17	36	41	10	36	28	49.5	49

Positionable
Run Tee

BRTA

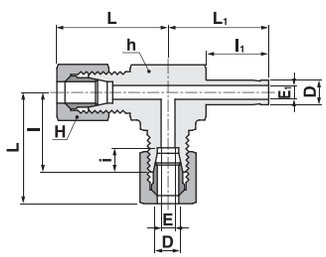

Part No.	Tube O.D D	E	E_1	Width across flat h	Width across flat H	i	l	l_1	L	L_1
BRTA-10	10	8	6	17	19	7	23	21	34.5	35
BRTA-12	12	10	8	19	22	7	24	22	35.5	37
BRTA-15	15	12	10	24	27	7.5	29	24	44.5	43
BRTA-16	16	13	11	27	30	7.5	32	24	44.5	43
BRTA-18	18	14	12	27	32	8	32	24	44.5	43
BRTA-20	20	17	14	30	36	8	33	25	45.5	45
BRTA-22	22	18	14	32	36	9	34	26	46.5	46
BRTA-25	25	20	17	36	41	10	36	28	49.5	49

37° Flare Fittings (SAE J514)

The best partner for value creation
We support the innovations of customer

04

Catalogue No. S-LOK Mar.2024

Design Standards

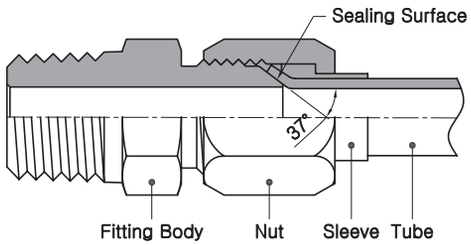

- S-LOK 37°flare fittings consists of body, sleeve and nut and meets the requirements of SAE J514 and ISO 8434-2 standards.
- Tapered threads meet the requirements of ASME B 1.20.1 (NPT), ISO 7/1, BS 21 (BSPT), JIS B 0203 (PT).
- Parallel threads meet the requirements of ASME B 1.1 (UN/UNF), ISO 228/1, BS 2799 (BSPP), JIS B 0202 (PF).

Material Standards

Materials / Material designator	Body		Nut & Sleeve	Applicable Tubing Spec.
	Bar Stock	Forging		
Stainless Steel 316/316L / S6	ASTM A276/A479 Type 316/316L	ASTM A182 F316/F316L	ASTM A276/A479 Type 316/316L	ASTM A269/A213
Carbon Steel / CS	ASTM A108 JIS G4051 S45C	ASTM A105 JIS G4051 S45C	ASTM A108 JIS G4051 S45C	ASTM A179/A161

Working Pressure Ratings

SAE Dash Size	Tube O.D		SAE Thread	Union & Bulkhead		Fitting with Female Swivel		Fitting with Pipe Thread	
	inch	mm		psi	bar	psi	bar	psi	bar
2	1/8	3	5/16 - 24	5000	345	5000	345	5000	345
3	3/16	4	3/8 - 24	5000	345	5000	345	5000	345
4	1/4	6	7/16 - 20	5000	345	4500	310	5000	345
5	5/16	8	1/2 - 20	5000	345	4000	275	5000	345
6	3/8	10	9/16 - 18	5000	345	4000	275	4000	275
8	1/2	12	3/4 - 16	4500	310	4000	275	3000	210
10	5/8	16	7/8 - 14	3500	240	3000	210	3000	210
12	3/4	18, 20	1 1/16 - 12	3500	240	3000	210	2500	170
14	7/8	22	1 3/16 - 12	3000	210	2500	170	2500	170
16	1	25	1 5/16 - 12	3000	210	2500	170	2000	140
20	1-1/4	32	1 5/8 - 12	2500	170	2000	140	1150	80
24	1-1/2	38	1 7/8 - 12	2000	140	1500	105	1000	70
32	2	50	2 1/2 - 12	1500	105	1125	80	1000	70

Ordering Information

Selection the applicable options from designators listed.

JMC	-	2T	-	01N	-	A	-	S6
Series Designator		Tube O.D Designator		Thread Designator		**Nil** : Without Nut & Sleeve **A** : With Nut & Sleeve		Body Material 316 Stainless Steel

Tube O.D Designators

Tube O.D Size, inch												
1/8	**3/16**	**1/4**	**5/16**	**3/8**	**1/2**	**5/8**	**3/4**	**7/8**	**1**	**1-1/4**	**1-1/2**	**2**
2T	3T	4T	5T	6T	8T	10T	12T	14T	16T	20T	24T	32T

Tube O.D Size, metric												
3	**4**	**6**	**8**	**10**	**12**	**16**	**18**	**20**	**22**	**25**	**32**	**38**
3M	4M	6M	8M	10M	12M	16M	18M	20M	22M	25M	32M	38M

Pipe Thread Designators

Thread Type	Standard	Pipe Thread Size								
		1/8	**1/4**	**3/8**	**1/2**	**3/4**	**1**	**1-1/4**	**1-1/2**	**2**
NPT	ASME B 1.20.1	01N	02N	03N	04N	06N	08N	10N	12N	16N
PT	ISO 7-1, BS-21, JIS B0203	01R	02R	03R	04R	06R	08R	10R	12R	16R
PF	ISO 228-1, BS 2779, JIS B 0202	01G	02G	03G	04G	06G	08G	10G	12G	16G

Unified Thread Designators

Standard	Unified Inch Thread Size												
	5/16-24	**3/8-24**	**7/16-20**	**1/2-20**	**9/16-18**	**3/4-16**	**7/8-14**	**1-1/16-12**	**1-3/16-12**	**1-5/16-12**	**1-5/8-12**	**1-7/8-12**	**2-1/2-12**
ASME B 1.1	02U	03U	04U	05U	06U	08U	10U	12U	14U	16U	20U	24U	32U

Tube to Tube Union

Tube to Male Pipe

Tube to Female Pipe

Tube to Straight Thread

Swivel Fittings

Spare Parts

Union

JU

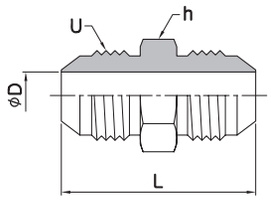

Part No.	Tube O.D		U (UN / UNF)	D	L	h (HEX)
	inch	mm				
JU-2T	1/8	3	5/16 - 24	1.6	29.7	11.1
JU-3T	3/16	4	3/8 - 24	3.2	31.2	11.1
JU-4T	1/4	6	7/16 - 20	4.4	34.8	12.7
JU-5T	5/16	8	1/2 - 20	6.0	34.8	14.3
JU-6T	3/8	10	9/16 - 18	7.5	35.8	15.8
JU-8T	1/2	12	3/4 - 16	9.9	41.1	20.6
JU-10T	5/8	16	7/8 - 14	12.3	47.8	23.8
JU-12T	3/4	18, 20	1 1/16 - 12	15.5	54.9	28.5
JU-14T	7/8	22	1 3/16 - 12	18.3	56.1	31.7
JU-16T	1	25	1 5/16 - 12	21.4	57.2	34.9
JU-20T	1-1/4	32	1 5/8 - 12	27.4	61.7	46.0
JU-24T	1-1/2	38	1 7/8 - 12	33.3	69.8	50.8
JU-32T	2	50	2 1/2 - 12	45.2	86.4	70.0

Union Elbow

JL

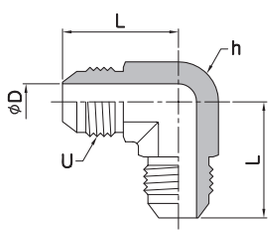

Part No.	Tube O.D		U (UN / UNF)	D	L	h (HEX)
	inch	mm				
JL-2T	1/8	3	5/16 - 24	1.6	19.6	11.1
JL-3T	3/16	4	3/8 - 24	3.2	21.1	11.1
JL-4T	1/4	6	7/16 - 20	4.4	22.6	11.1
JL-5T	5/16	8	1/2 - 20	6.0	24.1	14.3
JL-6T	3/8	10	9/16 - 18	7.5	26.9	14.3
JL-8T	1/2	12	3/4 - 16	9.9	31.8	19.0
JL-10T	5/8	16	7/8 - 14	12.3	36.8	22.2
JL-12T	3/4	18, 20	1 1/16 - 12	15.5	42.2	27.0
JL-14T	7/8	22	1 3/16 - 12	18.3	45.7	33.3
JL-16T	1	25	1 5/16 - 12	21.4	46.0	33.3
JL-20T	1-1/4	32	1 5/8 - 12	27.4	52.3	41.3
JL-24T	1-1/2	38	1 7/8 - 12	33.3	59.2	47.6
JL-32T	2	50	2 1/2 - 12	45.2	77.7	63.5

Union Tee

JT

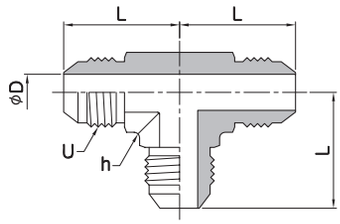

Part No.	Tube O.D		U (UN / UNF)	D	L	h (HEX)
	inch	mm				
JT-2T	1/8	3	5/16 - 24	1.6	19.6	11.1
JT-3T	3/16	4	3/8 - 24	3.2	21.1	11.1
JT-4T	1/4	6	7/16 - 20	4.4	22.6	11.1
JT-5T	5/16	8	1/2 - 20	6.0	24.1	14.3
JT-6T	3/8	10	9/16 - 18	7.5	26.9	14.3
JT-8T	1/2	12	3/4 - 16	9.9	31.8	19.0
JT-10T	5/8	16	7/8 - 14	12.3	36.8	22.2
JT-12T	3/4	18, 20	1 1/16 - 12	15.5	42.2	27.0
JT-14T	7/8	22	1 3/16 - 12	18.3	45.7	33.3
JT-16T	1	25	1 5/16 - 12	21.4	46.0	33.3
JT-20T	1-1/4	32	1 5/8 - 12	27.4	52.3	41.3
JT-24T	1-1/2	38	1 7/8 - 12	33.3	59.2	47.6
JT-32T	2	50	2 1/2 - 12	45.2	77.7	63.5

Union Cross

JX

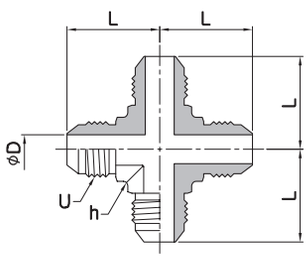

Part No.	Tube O.D		U (UN / UNF)	D	L	h (HEX)
	inch	mm				
JX-2T	1/8	3	5/16 - 24	1.6	19.6	11.1
JX-3T	3/16	4	3/8 - 24	3.2	21.1	11.1
JX-4T	1/4	6	7/16 - 20	4.4	22.6	11.1
JX-5T	5/16	8	1/2 - 20	6.0	24.1	14.3
JX-6T	3/8	10	9/16 - 18	7.5	26.9	14.3
JX-8T	1/2	12	3/4 - 16	9.9	31.8	19.0
JX-10T	5/8	16	7/8 - 14	12.3	36.8	22.2
JX-12T	3/4	18, 20	1 1/16 - 12	15.5	42.2	27.0
JX-14T	7/8	22	1 3/16 - 12	18.3	45.7	33.3
JX-16T	1	25	1 5/16 - 12	21.4	46.0	33.3
JX-20T	1-1/4	32	1 5/8 - 12	27.4	52.3	41.3
JX-24T	1-1/2	38	1 7/8 - 12	33.3	59.2	47.6
JX-32T	2	50	2 1/2 - 12	45.2	77.7	63.5

Bulkhead Union

JUB

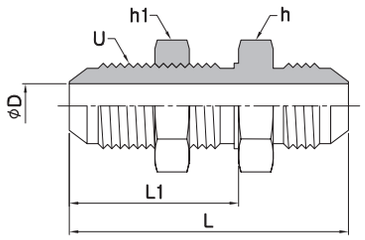

Part No.	Tube O.D		U (UN / UNF)	D	L	L1	h (HEX)	h1 (HEX)
	inch	mm						
JUB-2T	1/8	3	5/16 - 24	1.6	47.5	28.2	11.1	14.3
JUB-3T	3/16	4	3/8 - 24	3.2	48.3	28.2	11.1	15.8
JUB-4T	1/4	6	7/16 - 20	4.4	52.6	30.5	12.7	17.4
JUB-5T	5/16	8	1/2 - 20	6.0	52.6	30.5	14.3	19.0
JUB-6T	3/8	10	9/16 - 18	7.5	55.4	32.5	15.8	20.6
JUB-8T	1/2	12	3/4 - 16	9.9	62.0	36.6	20.6	25.4
JUB-10T	5/8	16	7/8 - 14	12.3	69.6	40.1	23.8	28.5
JUB-12T	3/4	18, 20	1 1/16 - 12	15.5	78.5	44.4	28.5	34.9
JUB-14T	7/8	22	1 3/16 - 12	18.3	79.2	44.4	31.7	38.1
JUB-16T	1	25	1 5/16 - 12	21.4	79.8	44.4	34.9	41.2
JUB-20T	1-1/4	32	1 5/8 - 12	27.4	84.1	45.7	46.0	47.6
JUB-24T	1-1/2	38	1 7/8 - 12	33.3	89.4	46.0	53.9	53.9
JUB-32T	2	50	2 1/2 - 12	45.2	106.7	53.1	70.0	69.8

Weld Bulkhead Union

JUBW

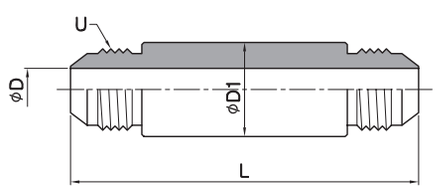

Part No.	Tube O.D		U (UN / UNF)	D	D1	L
	inch	mm				
JUBW-2T	1/8	3	5/16 - 24	1.6	11.0	70.0
JUBW-3T	3/16	4	3/8 - 24	3.2	11.0	70.0
JUBW-4T	1/4	6	7/16 - 20	4.4	14.0	80.0
JUBW-5T	5/16	8	1/2 - 20	6.0	16.0	100.0
JUBW-6T	3/8	10	9/16 - 18	7.5	17.0	100.0
JUBW-8T	1/2	12	3/4 - 16	9.9	22.0	100.0
JUBW-10T	5/8	16	7/8 - 14	12.3	25.0	110.0
JUBW-12T	3/4	18, 20	1 1/16 - 12	15.5	30.0	120.0
JUBW-14T	7/8	22	1 3/16 - 12	18.3	32.0	130.0
JUBW-16T	1	25	1 5/16 - 12	21.4	40.0	130.0
JUBW-20T	1-1/4	32	1 5/8 - 12	27.4	46.0	140.0
JUBW-24T	1-1/2	38	1 7/8 - 12	33.3	50.0	140.0
JUBW-32T	2	50	2 1/2 - 12	45.2	70.0	150.0

Bulkhead Union Elbow

JBL

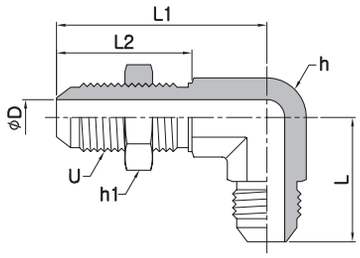

Part No.	Tube O.D		U (UN / UNF)	D	L	L1	L2	h (HEX)	h1 (HEX)
	inch	mm							
JBL-2T	1/8	3	5/16 - 24	1.6	22.4	38.1	23.4	11.1	14.3
JBL-3T	3/16	4	3/8 - 24	3.2	23.9	38.1	23.4	11.1	15.8
JBL-4T	1/4	6	7/16 - 20	4.4	24.6	40.4	25.9	11.1	17.4
JBL-5T	5/16	8	1/2 - 20	6.0	26.9	43.7	25.9	14.3	19.0
JBL-6T	3/8	10	9/16 - 18	7.5	27.7	46.0	27.7	14.3	20.6
JBL-8T	1/2	12	3/4 - 16	9.9	34.5	53.6	31.8	19.0	25.4
JBL-10T	5/8	16	7/8 - 14	12.3	39.6	60.7	35.3	22.2	28.5
JBL-12T	3/4	18, 20	1 1/16 - 12	15.5	45.2	67.8	39.6	27.0	34.9
JBL-14T	7/8	22	1 3/16 - 12	18.3	48.8	71.1	39.6	33.3	38.1
JBL-16T	1	25	1 5/16 - 12	21.4	49.3	71.1	39.6	33.3	41.2
JBL-20T	1-1/4	32	1 5/8 - 12	27.4	55.1	79.2	40.9	41.3	47.6
JBL-24T	1-1/2	38	1 7/8 - 12	33.3	59.4	86.9	41.1	47.6	53.9
JBL-32T	2	50	2 1/2 - 12	45.2	73.4	104.4	48.5	63.5	69.8

Male Connector

JMC

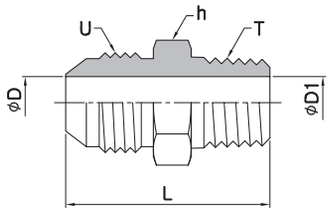

Part No.	Tube O.D		U (UN / UNF)	T (NPT)	D	D1	L	h (HEX)
	inch	mm						
JMC-2T-01N	1/8	3	5/16 - 24	1/8	1.6	4.8	28.2	11.1
JMC-3T-01N	3/16	4	3/8 - 24	1/8	3.2	4.8	29.0	11.1
JMC-4T-01N	1/4	6	7/16 - 20	1/8	4.4	4.8	31.0	12.7
JMC-5T-01N	5/16	8	1/2 - 20	1/8	6.0	4.8	31.0	14.3
JMC-6T-02N	3/8	10	9/16 - 18	1/4	7.5	7.0	36.3	15.8
JMC-8T-03N	1/2	12	3/4 - 16	3/8	9.9	10.3	38.9	20.6
JMC-10T-04N	5/8	16	7/8 - 14	1/2	12.3	13.5	48.0	23.8
JMC-12T-06N	3/4	18, 20	1 1/16 - 12	3/4	15.5	18.3	52.3	28.5
JMC-14T-06N	7/8	22	1 3/16 - 12	3/4	18.3	18.3	53.1	31.7
JMC-16T-08N	1	25	1 5/16 - 12	1	21.4	23.8	58.4	34.9
JMC-20T-10N	1-1/4	32	1 5/8 - 12	1-1/4	27.4	31.7	62.2	46.0
JMC-24T-12N	1-1/2	38	1 7/8 - 12	1-1/2	33.3	38.0	68.1	50.8
JMC-32T-16N	2	50	2 1/2 - 12	2	45.2	49.0	79.0	70.0

Male Elbow

JLM

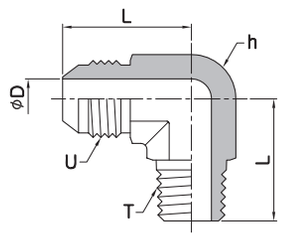

Part No.	Tube O.D		U (UN / UNF)	T (NPT)	D	D1	L	L1	h (HEX)
	inch	mm							
JLM-2T-01N	1/8	3	5/16 - 24	1/8	1.6	4.8	19.6	18.3	11.1
JLM-3T-01N	3/16	4	3/8 - 24	1/8	3.2	4.8	21.1	18.3	11.1
JLM-4T-01N	1/4	6	7/16 - 20	1/8	4.4	4.8	22.6	19.8	11.1
JLM-5T-01N	5/16	8	1/2 - 20	1/8	6.0	4.8	24.1	19.8	14.3
JLM-6T-02N	3/8	10	9/16 - 18	1/4	7.5	7.0	26.9	27.7	14.3
JLM-8T-03N	1/2	12	3/4 - 16	3/8	9.9	10.3	31.8	31.0	19.0
JLM-10T-04N	5/8	16	7/8 - 14	1/2	12.3	13.5	36.8	37.3	22.2
JLM-12T-06N	3/4	18, 20	1 1/16 - 12	3/4	15.5	18.3	42.2	40.4	27.0
JLM-14T-06N	7/8	22	1 3/16 - 12	3/4	18.3	18.3	45.7	42.9	33.3
JLM-16T-08N	1	25	1 5/16 - 12	1	21.4	23.8	46.0	50.0	33.3
JLM-20T-10N	1-1/4	32	1 5/8 - 12	1-1/4	27.4	31.7	52.3	60.5	41.3
JLM-24T-12N	1-1/2	38	1 7/8 - 12	1-1/2	33.3	38.0	59.2	67.1	47.6
JLM-32T-16N	2	50	2 1/2 - 12	2	45.2	49.0	77.7	76.2	63.5

Male Run Tee

JTRM

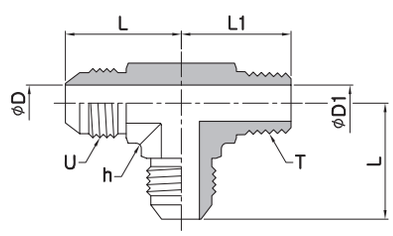

Part No.	Tube O.D		U (UN / UNF)	T (NPT)	D	D1	L	L1	h (HEX)
	inch	mm							
JTRM-2T-01N	1/8	3	5/16 - 24	1/8	1.6	4.8	19.6	18.3	11.1
JTRM-3T-01N	3/16	4	3/8 - 24	1/8	3.2	4.8	21.1	18.3	11.1
JTRM-4T-01N	1/4	6	7/16 - 20	1/8	4.4	4.8	22.6	19.8	11.1
JTRM-5T-01N	5/16	8	1/2 - 20	1/8	6.0	4.8	24.1	19.8	14.3
JTRM-6T-02N	3/8	10	9/16 - 18	1/4	7.5	7.0	26.9	27.7	14.3
JTRM-8T-03N	1/2	12	3/4 - 16	3/8	9.9	10.3	31.8	31.0	19.0
JTRM-10T-04N	5/8	16	7/8 - 14	1/2	12.3	13.5	36.8	37.3	22.2
JTRM-12T-06N	3/4	18, 20	1 1/16 - 12	3/4	15.5	18.3	42.2	40.4	27.0
JTRM-14T-06N	7/8	22	1 3/16 - 12	3/4	18.3	18.3	45.7	42.9	33.3
JTRM-16T-08N	1	25	1 5/16 - 12	1	21.4	23.8	46.0	50.0	33.3
JTRM-20T-10N	1-1/4	32	1 5/8 - 12	1-1/4	27.4	31.7	52.3	60.5	41.3
JTRM-24T-12N	1-1/2	38	1 7/8 - 12	1-1/2	33.3	38.0	59.2	67.1	47.6
JTRM-32T-16N	2	50	2 1/2 - 12	2	45.2	49.0	77.7	76.2	63.5

Male Branch Tee

JTBM

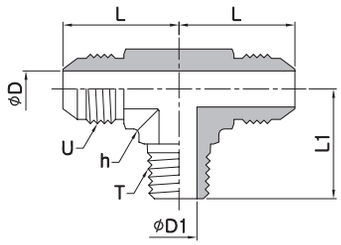

Part No.	Tube O.D		U (UN / UNF)	T (NPT)	D	D1	L	L1	h (HEX)
	inch	mm							
JTBM-2T-01N	1/8	3	5/16 - 24	1/8	1.6	4.8	19.6	18.3	11.1
JTBM-3T-01N	3/16	4	3/8 - 24	1/8	3.2	4.8	21.1	18.3	11.1
JTBM-4T-01N	1/4	6	7/16 - 20	1/8	4.4	4.8	22.6	19.8	11.1
JTBM-5T-01N	5/16	8	1/2 - 20	1/8	6.0	4.8	24.1	19.8	14.3
JTBM-6T-02N	3/8	10	9/16 - 18	1/4	7.5	7.0	26.9	27.7	14.3
JTBM-8T-03N	1/2	12	3/4 - 16	3/8	9.9	10.3	31.8	31.0	19.0
JTBM-10T-04N	5/8	16	7/8 - 14	1/2	12.3	13.5	36.8	37.3	22.2
JTBM-12T-06N	3/4	18, 20	1 1/16 - 12	3/4	15.5	18.3	42.2	40.4	27.0
JTBM-14T-06N	7/8	22	1 3/16 - 12	3/4	18.3	18.3	45.7	42.9	33.3
JTBM-16T-08N	1	25	1 5/16 - 12	1	21.4	23.8	46.0	50.0	33.3
JTBM-20T-10N	1-1/4	32	1 5/8 - 12	1-1/4	27.4	31.7	52.3	60.5	41.3
JTBM-24T-12N	1-1/2	38	1 7/8 - 12	1-1/2	33.3	38.0	59.2	67.1	47.6
JTBM-32T-16N	2	50	2 1/2 - 12	2	45.2	49.0	77.7	76.2	63.5

45° Male Elbow

JLBM

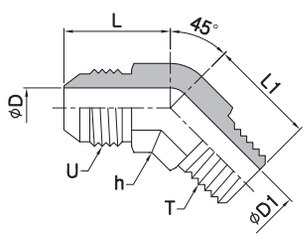

Part No.	Tube O.D		U (UN / UNF)	T (NPT)	D	D1	L	L1	h (HEX)
	inch	mm							
JLBM-2T-01N	1/8	3	5/16 - 24	1/8	1.6	4.8	17.5	13.2	11.1
JLBM-3T-01N	3/16	4	3/8 - 24	1/8	3.2	4.8	17.5	13.2	11.1
JLBM-4T-01N	1/4	6	7/16 - 20	1/8	4.4	4.8	18.3	16.3	11.1
JLBM-5T-01N	5/16	8	1/2 - 20	1/8	6.0	4.8	19.6	16.3	14.3
JLBM-6T-02N	3/8	10	9/16 - 18	1/4	7.5	7.0	21.1	21.8	14.3
JLBM-8T-03N	1/2	12	3/4 - 16	3/8	9.9	10.3	24.9	24.1	19.0
JLBM-10T-04N	5/8	16	7/8 - 14	1/2	12.3	13.5	28.2	29.7	22.2
JLBM-12T-06N	3/4	18, 20	1 1/16 - 12	3/4	15.5	18.3	32.5	30.5	27.0
JLBM-14T-06N	7/8	22	1 3/16 - 12	3/4	18.3	18.3	36.8	33.0	33.3
JLBM-16T-08N	1	25	1 5/16 - 12	1	21.4	23.8	37.3	37.6	33.3
JLBM-20T-10N	1-1/4	32	1 5/8 - 12	1-1/4	27.4	31.7	40.4	42.4	41.3
JLBM-24T-12N	1-1/2	38	1 7/8 - 12	1-1/2	33.3	38.0	45.2	45.0	47.6
JLBM-32T-16N	2	50	2 1/2 - 12	2	45.2	49.0	56.4	53.6	63.5

Female Connector

JCF

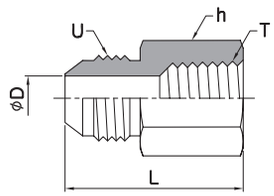

Part No.	Tube O.D		U (UN / UNF)	T (NPT)	D	L	h (HEX)
	inch	mm					
JCF-2T-01N	1/8	3	5/16 - 24	1/8	1.6	28.4	14.3
JCF-3T-01N	3/16	4	3/8 - 24	1/8	3.2	28.7	14.3
JCF-4T-01N	1/4	6	7/16 - 20	1/8	4.4	30.2	14.3
JCF-5T-01N	5/16	8	1/2 - 20	1/8	6.0	29.7	14.3
JCF-6T-02N	3/8	10	9/16 - 18	1/4	7.5	35.6	19.0
JCF-8T-03N	1/2	12	3/4 - 16	3/8	9.9	39.6	22.2
JCF-10T-04N	5/8	16	7/8 - 14	1/2	12.3	48.0	28.5
JCF-12T-06N	3/4	18, 20	1 1/16 - 12	3/4	15.5	52.3	34.9
JCF-14T-06N	7/8	22	1 3/16 - 12	3/4	18.3	52.3	34.9
JCF-16T-08N	1	25	1 5/16 - 12	1	21.4	59.7	41.2
JCF-20T-10N	1-1/4	32	1 5/8 - 12	1-1/4	27.4	63.2	50.8
JCF-24T-12N	1-1/2	38	1 7/8 - 12	1-1/2	33.3	66.5	60.3
JCF-32T-16N	2	50	2 1/2 - 12	2	45.2	75.4	73.0

Bulkhead Female Connector

JCBF

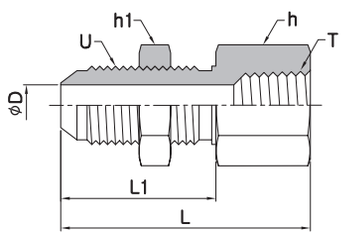

Part No.	Tube O.D		U (UN / UNF)	T (NPT)	D	L	L1	h (HEX)	h1 (HEX)
	inch	mm							
JCBF-2T-01N	1/8	3	5/16 - 24	1/8	1.6	41.2	28.2	14.3	14.3
JCBF-3T-01N	3/16	4	3/8 - 24	1/8	3.2	41.2	28.2	14.3	15.8
JCBF-4T-01N	1/4	6	7/16 - 20	1/8	4.4	46.7	30.5	14.3	17.4
JCBF-5T-01N	5/16	8	1/2 - 20	1/8	6.0	43.5	30.5	14.3	19.0
JCBF-6T-02N	3/8	10	9/16 - 18	1/4	7.5	52.3	32.5	19.0	20.6
JCBF-8T-03N	1/2	12	3/4 - 16	3/8	9.9	54.4	36.6	22.2	25.4
JCBF-10T-04N	5/8	16	7/8 - 14	1/2	12.3	67.5	40.1	28.5	28.5
JCBF-12T-06N	3/4	18, 20	1 1/16 - 12	3/4	15.5	73.9	44.4	34.9	34.9
JCBF-14T-06N	7/8	22	1 3/16 - 12	3/4	18.3	73.4	44.4	34.9	38.1
JCBF-16T-08N	1	25	1 5/16 - 12	1	21.4	78.5	44.4	41.2	41.2
JCBF-20T-10N	1-1/4	32	1 5/8 - 12	1-1/4	27.4	80.7	45.7	50.8	47.6
JCBF-24T-12N	1-1/2	38	1 7/8 - 12	1-1/2	33.3	85.1	46.0	60.3	53.9
JCBF-32T-16N	2	50	2 1/2 - 12	2	45.2	93.1	53.1	73.0	69.8

Female Elbow

JLF

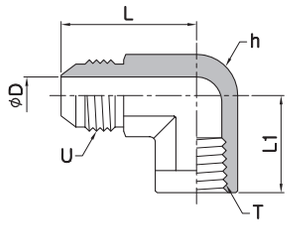

Part No.	Tube O.D		U (UN / UNF)	T (NPT)	D	L	L1	h (HEX)
	inch	mm						
JLF-2T-01N	1/8	3	5/16 - 24	1/8	1.6	25.4	16.8	14.3
JLF-3T-01N	3/16	4	3/8 - 24	1/8	3.2	26.2	16.8	14.3
JLF-4T-01N	1/4	6	7/16 - 20	1/8	4.4	27.4	16.8	14.3
JLF-5T-01N	5/16	8	1/2 - 20	1/8	6.0	27.4	16.8	14.3
JLF-6T-02N	3/8	10	9/16 - 18	1/4	7.5	31.2	22.4	19.0
JLF-8T-03N	1/2	12	3/4 - 16	3/8	9.9	36.1	25.9	22.2
JLF-10T-04N	5/8	16	7/8 - 14	1/2	12.3	41.7	31.2	27.0
JLF-12T-06N	3/4	18, 20	1 1/16 - 12	3/4	15.5	48.0	34.5	33.3
JLF-14T-06N	7/8	22	1 3/16 - 12	3/4	18.3	47.2	36.1	33.3
JLF-16T-08N	1	25	1 5/16 - 12	1	21.4	55.1	41.1	41.3
JLF-20T-10N	1-1/4	32	1 5/8 - 12	1-1/4	27.4	59.2	43.2	47.6
JLF-24T-12N	1-1/2	38	1 7/8 - 12	1-1/2	33.3	73.4	52.8	65.1
JLF-32T-16N	2	50	2 1/2 - 12	2	45.2	83.8	60.7	71.4

Female Run Tee

JTRF

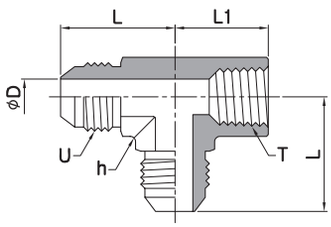

Part No.	Tube O.D		U (UN / UNF)	T (NPT)	D	L	L1	h (HEX)
	inch	mm						
JTRF-2T-01N	1/8	3	5/16 - 24	1/8	1.6	25.4	16.8	14.3
JTRF-3T-01N	3/16	4	3/8 - 24	1/8	3.2	26.2	16.8	14.3
JTRF-4T-01N	1/4	6	7/16 - 20	1/8	4.4	27.4	16.8	14.3
JTRF-5T-01N	5/16	8	1/2 - 20	1/8	6.0	27.4	16.8	14.3
JTRF-6T-02N	3/8	10	9/16 - 18	1/4	7.5	31.2	22.4	19.0
JTRF-8T-03N	1/2	12	3/4 - 16	3/8	9.9	36.1	25.9	22.2
JTRF-10T-04N	5/8	16	7/8 - 14	1/2	12.3	41.7	31.2	27.0
JTRF-12T-06N	3/4	18, 20	1 1/16 - 12	3/4	15.5	48.0	34.5	33.3
JTRF-14T-06N	7/8	22	1 3/16 - 12	3/4	18.3	47.2	36.1	33.3
JTRF-16T-08N	1	25	1 5/16 - 12	1	21.4	55.1	41.1	41.3
JTRF-20T-10N	1-1/4	32	1 5/8 - 12	1-1/4	27.4	59.2	43.2	47.6
JTRF-24T-12N	1-1/2	38	1 7/8 - 12	1-1/2	33.3	73.4	52.8	65.1
JTRF-32T-16N	2	50	2 1/2 - 12	2	45.2	83.8	60.7	71.4

Female Branch Tee

JTBF

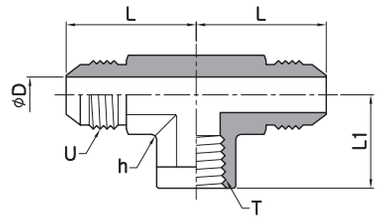

Part No.	Tube O.D		U (UN / UNF)	T (NPT)	D	L	L1	h (HEX)
	inch	mm						
JTBF-2T-01N	1/8	3	5/16 - 24	1/8	1.6	25.4	16.8	14.3
JTBF-3T-01N	3/16	4	3/8 - 24	1/8	3.2	26.2	16.8	14.3
JTBF-4T-01N	1/4	6	7/16 - 20	1/8	4.4	27.4	16.8	14.3
JTBF-5T-01N	5/16	8	1/2 - 20	1/8	6.0	27.4	16.8	14.3
JTBF-6T-02N	3/8	10	9/16 - 18	1/4	7.5	31.2	22.4	19.0
JTBF-8T-03N	1/2	12	3/4 - 16	3/8	9.9	36.1	25.9	22.2
JTBF-10T-04N	5/8	16	7/8 - 14	1/2	12.3	41.7	31.2	27.0
JTBF-12T-06N	3/4	18, 20	1 1/16 - 12	3/4	15.5	48.0	34.5	33.3
JTBF-14T-06N	7/8	22	1 3/16 - 12	3/4	18.3	47.2	36.1	33.3
JTBF-16T-08N	1	25	1 5/16 - 12	1	21.4	55.1	41.1	41.3
JTBF-20T-10N	1-1/4	32	1 5/8 - 12	1-1/4	27.4	59.2	43.2	47.6
JTBF-24T-12N	1-1/2	38	1 7/8 - 12	1-1/2	33.3	73.4	52.8	65.1
JTBF-32T-16N	2	50	2 1/2 - 12	2	45.2	83.8	60.7	71.4

O-Seal Male Connector (PF)

JMCS-G

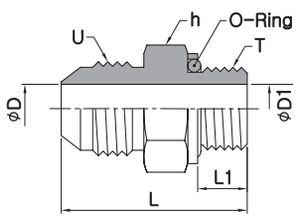

Part No.	Tube O.D		U (UN / UNF)	T (PF)	D	D1	L	L1	h (HEX)
	inch	mm							
JMCS-4T-01G	1/4	6	7/16 - 20	1/8	4.4	4.4	28.7	6.2	17.0
JMCS-5T-01G	5/16	8	1/2 - 20	1/8	6.0	4.0	28.7	6.2	17.0
JMCS-6T-02G	3/8	10	9/16 - 18	1/4	7.5	6.0	32.0	9.3	19.1
JMCS-8T-03G	1/2	12	3/4 - 16	3/8	9.9	9.9	36.0	9.3	22.2
JMCS-10T-04G	5/8	16	7/8 - 14	1/2	12.3	12.3	43.9	12.6	30.0
JMCS-12T-06G	3/4	18, 20	1 1/16 - 12	3/4	15.5	15.5	47.5	12.6	36.0
JMCS-16T-08G	1	25	1 5/16 - 12	1	21.4	21.4	53.6	15.9	46.0
JMCS-20T-10G	1-1/4	32	1 5/8 - 12	1-1/4	27.4	27.4	56.4	15.9	50.0
JMCS-24T-12G	1-1/2	38	1 7/8 - 12	1-1/2	33.3	33.3	61.0	15.9	55.0
JMCS-32T-16G	2	50	2 1/2 - 12	2	45.2	45.2	80.5	25.0	70.0

O-Seal Male Connector (UNF)

JMCS-U

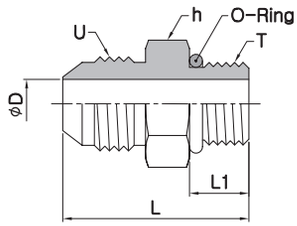

Part No.	Tube O.D		U (UN / UNF)	T (UN / UNF)	D	L	L1	h (HEX)
	inch	mm						
JMCS-2T-02U	1/8	3	5/16 - 24	5/16 - 24	1.6	26.9	7.5	11.1
JMCS-3T-03U	3/16	4	3/8 - 24	3/8 - 24	3.2	27.9	7.5	12.7
JMCS-4T-04U	1/4	6	7/16 - 20	7/16 - 20	4.4	31.2	9.1	14.3
JMCS-5T-05U	5/16	8	1/2 - 20	1/2 - 20	6.0	31.2	9.1	15.8
JMCS-6T-06U	3/8	10	9/16 - 18	9/16 - 18	7.5	33.0	9.9	17.4
JMCS-8T-08U	1/2	12	3/4 - 16	3/4 - 16	9.9	37.6	11.1	22.2
JMCS-10T-10U	5/8	16	7/8 - 14	7/8 - 14	12.3	43.2	12.7	25.4
JMCS-12T-12U	3/4	18, 20	1 1/16 - 12	1 1/16 - 12	15.5	50.0	15.1	31.7
JMCS-14T-14U	7/8	22	1 3/16 - 12	1 3/16 - 12	18.3	50.5	15.1	34.9
JMCS-16T-16U	1	25	1 5/16 - 12	1 5/16 - 12	21.4	51.8	15.1	38.1
JMCS-20T-20U	1-1/4	32	1 5/8 - 12	1 5/8 - 12	27.4	55.1	15.1	47.6
JMCS-24T-24U	1-1/2	38	1 7/8 - 12	1 7/8 - 12	33.3	60.2	15.1	53.9
JMCS-32T-32U	2	50	2 1/2 - 12	2 1/2 - 12	45.2	70.6	15.1	69.8

O-seal Male Elbow (UNF)

JLS-U

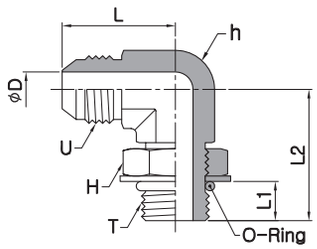

Part No.	Tube O.D		U (UN / UNF)	T (UN / UNF)	D	L	L1	L2	h (HEX)	H (HEX)
	inch	mm								
JLS-2T-02U	1/8	3	5/16 - 24	5/16 - 24	1.6	19.6	8.4	23.9	11.1	14.3
JLS-3T-03U	3/16	4	3/8 - 24	3/8 - 24	3.2	21.1	8.5	23.9	11.1	15.8
JLS-4T-04U	1/4	6	7/16 - 20	7/16 - 20	4.4	22.6	9.8	26.2	11.1	17.4
JLS-5T-05U	5/16	8	1/2 - 20	1/2 - 20	6.0	24.1	9.8	28.7	14.3	19.0
JLS-6T-06U	3/8	10	9/16 - 18	9/16 - 18	7.5	26.9	11.0	31.8	14.3	20.6
JLS-8T-08U	1/2	12	3/4 - 16	3/4 - 16	9.9	31.8	12.5	36.8	19.0	25.4
JLS-10T-10U	5/8	16	7/8 - 14	7/8 - 14	12.3	36.8	14.3	43.2	22.2	28.5
JLS-12T-12U	3/4	18, 20	1 1/16 - 12	1 1/16 - 12	15.5	42.2	16.5	49.3	27.0	34.9
JLS-14T-14U	7/8	22	1 3/16 - 12	1 3/16 - 12	18.3	45.7	16.5	50.8	33.3	38.1
JLS-16T-16U	1	25	1 5/16 - 12	1 5/16 - 12	21.4	46.0	16.5	52.1	33.3	41.2
JLS-20T-20U	1-1/4	32	1 5/8 - 12	1 5/8 - 12	27.4	52.3	16.5	57.2	41.3	47.6
JLS-24T-24U	1-1/2	38	1 7/8 - 12	1 7/8 - 12	33.3	59.2	16.5	60.7	47.6	53.9
JLS-32T-32U	2	50	2 1/2 - 12	2 1/2 - 12	45.2	77.7	16.5	73.4	63.5	69.8

O-Seal 45° Male Elbow (UNF)

JLBS-U

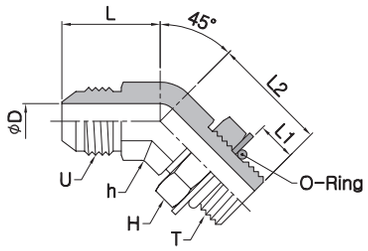

Part No.	Tube O.D		U (UN / UNF)	T (UN / UNF)	D	L	L1	L2	h (HEX)	H (HEX)
	inch	mm								
JLBS-2T-02U	1/8	3	5/16 - 24	5/16 - 24	1.6	17.5	8.4	22.4	11.1	14.3
JLBS-3T-03U	3/16	4	3/8 - 24	3/8 - 24	3.2	17.5	9.5	22.4	11.1	15.8
JLBS-4T-04U	1/4	6	7/16 - 20	7/16 - 20	4.4	18.3	9.8	26.7	11.1	17.4
JLBS-5T-05U	5/16	8	1/2 - 20	1/2 - 20	6.0	19.6	9.8	26.7	14.3	19.0
JLBS-6T-06U	3/8	10	9/16 - 18	9/16 - 18	7.5	21.1	11.0	29.0	14.3	20.6
JLBS-8T-08U	1/2	12	3/4 - 16	3/4 - 16	9.9	24.9	12.5	33.0	19.0	25.4
JLBS-10T-10U	5/8	16	7/8 - 14	7/8 - 14	12.3	28.2	14.3	38.6	22.2	28.5
JLBS-12T-12U	3/4	18, 20	1 1/16 - 12	1 1/16 - 12	15.5	32.5	16.5	43.9	27.0	34.9
JLBS-14T-14U	7/8	22	1 3/16 - 12	1 3/16 - 12	18.3	36.8	16.5	47.2	33.3	38.1
JLBS-16T-16U	1	25	1 5/16 - 12	1 5/16 - 12	21.4	37.3	16.5	47.2	33.3	41.2
JLBS-20T-20U	1-1/4	32	1 5/8 - 12	1 5/8 - 12	27.4	40.4	16.5	48.5	41.3	47.6
JLBS-24T-24U	1-1/2	38	1 7/8 - 12	1 7/8 - 12	33.3	45.2	16.5	48.5	47.6	53.9
JLBS-32T-32U	2W	50	2 1/2 - 12	2 1/2 - 12	45.2	56.4	16.5	47.2	63.5	69.8

O-Seal Tun Tee (UNF)

JTRS-U

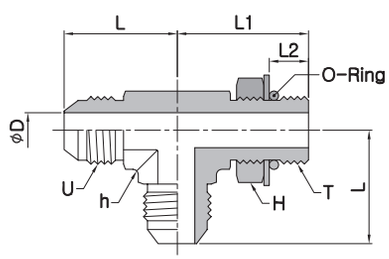

Part No.	Tube O.D		U (UN / UNF)	T (UN / UNF)	D	L	L1	L2	h (HEX)	H (HEX)
	inch	mm								
JTRS-2T-02U	1/8	3	5/16 - 24	5/16 - 24	1.6	19.6	23.9	8.4	11.1	14.3
JTRS-3T-03U	3/16	4	3/8 - 24	3/8 - 24	3.2	21.1	23.9	8.5	11.1	15.8
JTRS-4T-04U	1/4	6	7/16 - 20	7/16 - 20	4.4	22.6	26.2	9.8	11.1	17.4
JTRS-5T-05U	5/16	8	1/2 - 20	1/2 - 20	6.0	24.1	28.7	9.8	14.3	19.0
JTRS-6T-06U	3/8	10	9/16 - 18	9/16 - 18	7.5	26.9	31.8	11.0	14.3	20.6
JTRS-8T-08U	1/2	12	3/4 - 16	3/4 - 16	9.9	31.8	36.8	12.5	19.0	25.4
JTRS-10T-10U	5/8	16	7/8 - 14	7/8 - 14	12.3	36.8	43.2	14.3	22.2	28.5
JTRS-12T-12U	3/4	18, 20	1 1/16 - 12	1 1/16 - 12	15.5	42.2	49.3	16.5	27.0	34.9
JTRS-14T-14U	7/8	22	1 3/16 - 12	1 3/16 - 12	18.3	45.7	50.8	16.5	33.3	38.1
JTRS-16T-16U	1	25	1 5/16 - 12	1 5/16 - 12	21.4	46.0	52.1	16.5	33.3	41.2
JTRS-20T-20U	1-1/4	32	1 5/8 - 12	1 5/8 - 12	27.4	52.3	57.2	16.5	41.3	47.6
JTRS-24T-24U	1-1/2	38	1 7/8 - 12	1 7/8 - 12	33.3	59.2	60.7	16.5	47.6	53.9
JTRS-32T-32U	2	50	2 1/2 - 12	2 1/2 - 12	45.2	77.7	73.4	16.5	63.5	69.8

O-Seal Branch Tee (UNF)

JTBS-U

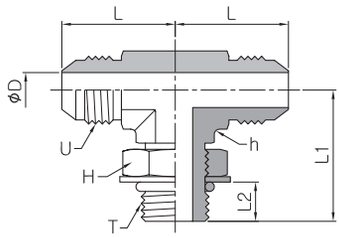

Part No.	Tube O.D		U (UN / UNF)	T (UN / UNF)	D	L	L1	L2	h (HEX)	H (HEX)
	inch	mm								
JTBS-2T-02U	1/8	3	5/16 - 24	5/16 - 24	1.6	19.6	23.9	8.4	11.1	14.3
JTBS-3T-03U	3/16	4	3/8 - 24	3/8 - 24	3.2	21.1	23.9	8.5	11.1	15.8
JTBS-4T-04U	1/4	6	7/16 - 20	7/16 - 20	4.4	22.6	26.2	9.8	11.1	17.4
JTBS-5T-05U	5/16	8	1/2 - 20	1/2 - 20	6.0	24.1	28.7	9.8	14.3	19.0
JTBS-6T-06U	3/8	10	9/16 - 18	9/16 - 18	7.5	26.9	31.8	11.0	14.3	20.6
JTBS-8T-08U	1/2	12	3/4 - 16	3/4 - 16	9.9	31.8	36.8	12.5	19.0	25.4
JTBS-10T-10U	5/8	16	7/8 - 14	7/8 - 14	12.3	36.8	43.2	14.3	22.2	28.5
JTBS-12T-12U	3/4	18, 20	1 1/16 - 12	1 1/16 - 12	15.5	42.2	49.3	16.5	27.0	34.9
JTBS-14T-14U	7/8	22	1 3/16 - 12	1 3/16 - 12	18.3	45.7	50.8	16.5	33.3	38.1
JTBS-16T-16U	1	25	1 5/16 - 12	1 5/16 - 12	21.4	46.0	52.1	16.5	33.3	41.2
JTBS-20T-20U	1-1/4	32	1 5/8 - 12	1 5/8 - 12	27.4	52.3	57.2	16.5	41.3	47.6
JTBS-24T-24U	1-1/2	38	1 7/8 - 12	1 7/8 - 12	33.3	59.2	60.7	16.5	47.6	53.9
JTBS-32T-32U	2	50	2 1/2 - 12	2 1/2 - 12	45.2	77.7	73.4	16.5	63.5	69.8

Swivel Connector

JSMC

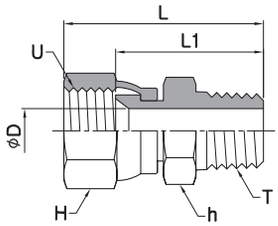

Part No.	Tube O.D		U (UN / UNF)	T (NPT)	D	L	L1	h (HEX)	H (HEX)
	inch	mm							
JSMC-4T-01N	1/4	6	7/16 - 20	1/8	4.4	28.7	20.0	12.7	14.3
JSMC-6T-02N	3/8	10	9/16 - 18	1/4	7.5	40.4	30.9	15.8	17.4
JSMC-8T-03N	1/2	12	3/4 - 16	3/8	9.9	41.9	32.2	20.6	22.2
JSMC-10T-04N	5/8	16	7/8 - 14	1/2	12.3	52.1	39.4	22.2	25.4
JSMC-12T-06N	3/4	18, 20	1 1/16 - 12	3/4	15.5	54.6	40.3	28.5	31.7
JSMC-16T-08N	1	25	1 5/16 - 12	1	21.4	63.5	48.4	34.9	38.1
JSMC-20T-10N	1-1/4	32	1 5/8 - 12	1-1/4	27.4	70.1	54.2	42.8	50.8
JSMC-24T-12N	1-1/2	38	1 7/8 - 12	1-1/2	33.3	77.5	58.9	50.8	57.1
JSMC32T-16N	2	50	2 1/2 - 12	2	45.2	85.9	62.1	66.6	69.8

O-Seal Swivel Connector (UNF)

JSMCS-U

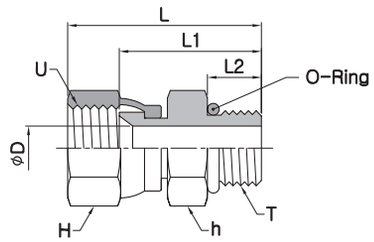

Part No.	Tube O.D		U (UN / UNF)	T (UN / UNF)	D	L	L1	L2	h (HEX)	H (HEX)
	inch	mm								
JSMCS-4T-04U	1/4	6	7/16 - 20	7/16 - 20	4.4	33.3	24.6	9.1	14.3	14.3
JSMCS-5T-05U	5/16	8	1/2 - 20	1/2 - 20	6.0	34.3	24.8	9.1	15.8	15.8
JSMCS-6T-06U	3/8	10	9/16 - 18	9/16 - 18	7.5	36.3	26.8	9.9	17.4	17.4
JSMCS-8T-08U	1/2	12	3/4 - 16	3/4 - 16	9.9	40.9	30.2	11.1	22.2	22.2
JSMCS-10T-10U	5/8	16	7/8 - 14	7/8 - 14	12.3	46.7	34.0	12.7	25.4	25.4
JSMCS-12T-12U	3/4	18, 20	1 1/16 - 12	1 1/16 - 12	15.5	52.6	38.3	15.1	31.7	31.7
JSMCS-16T-16U	1	25	1 5/16 - 12	1 5/16 - 12	21.4	57.9	42.8	15.1	38.1	38.1
JSMCS-20T-20U	1-1/4	32	1 5/8 - 12	1 5/8 - 12	27.4	63.2	47.4	15.1	50.8	50.8

Swivel Female Connector

JSCF

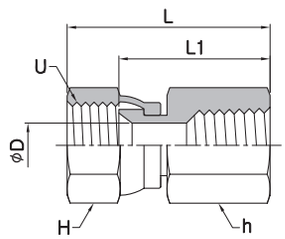

Part No.	Tube O.D		U (UN / UNF)	T (NPT)	D	L	L1	h (HEX)	H (HEX)
	inch	mm							
JSCF-4T-01N	1/4	6	7/16 - 20	1/8	4.4	32.1	23.4	14.3	14.3
JSCF-6T-02N	3/8	10	9/16 - 18	1/4	7.5	36.4	26.9	19.0	17.4
JSCF-8T-03N	1/2	12	3/4 - 16	3/8	9.9	40.7	31.2	22.2	22.2
JSCF-10T-04N	5/8	16	7/8 - 14	1/2	12.3	48.0	37.3	28.5	25.4
JSCF-12T-06N	3/4	18, 20	1 1/16 - 12	3/4	15.5	51.1	38.4	34.9	31.7
JSCF-16T-08N	1	25	1 5/16 - 12	1	21.4	62.1	47.0	41.2	38.1
JSCF-20T-10N	1-1/4	32	1 5/8 - 12	1-1/4	27.4	71.0	55.1	50.8	50.8
JSCF-24T-12N	1-1/2	38	1 7/8 - 12	1-1/2	33.3	76.0	57.4	60.3	57.1
JSCF-32T-16N	2	50	2 1/2 - 12	2	45.2	86.0	62.2	73.0	69.8

Swivel Elbow

JSL

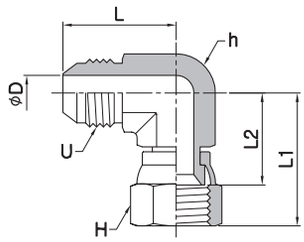

Part No.	Tube O.D		U (UN / UNF)	D	L	L1	L2	h (HEX)	H1(HEX)
	inch	mm							
JSL-2T	1/8	3	5/16 - 24	1.6	19.6	24.6	16.7	11.1	11.1
JSL-3T	3/16	4	3/8 - 24	3.2	21.1	25.4	17.1	11.1	12.7
JSL-4T	1/4	6	7/16 - 20	4.4	22.6	25.4	16.7	11.1	14.2
JSL-5T	5/16	8	1/2 - 20	6.0	24.1	26.9	17.4	14.3	15.8
JSL-6T	3/8	10	9/16 - 18	7.5	26.9	31.8	22.3	14.3	17.4
JSL-8T	1/2	12	3/4 - 16	9.9	31.8	35.1	24.4	19.0	22.2
JSL-10T	5/8	16	7/8 - 14	12.3	36.8	41.1	28.4	22.2	25.4
JSL-12T	3/4	18, 20	1 1/16 - 12	15.5	42.2	44.4	30.1	27.0	31.7
JSL-14T	7/8	22	1 3/16 - 12	18.3	45.7	45.2	30.5	33.3	34.9
JSL-16T	1	25	1 5/16 - 12	21.4	46.0	50.8	35.7	33.3	38.1
JSL-20T	1-1/4	32	1 5/8 - 12	27.4	52.3	58.7	42.8	41.3	50.8
JSL-24T	1-1/2	38	1 7/8 - 12	33.3	59.2	65.8	47.2	47.6	57.1
JSL-32T	2	50	2 1/2 - 12	45.2	77.7	85.9	62.1	63.5	69.8

Swivel Run Tee

JSTR

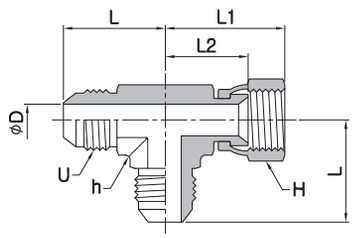

Part No.	Tube O.D		U (UN / UNF)	D	L	L1	L2	h (HEX)	H (HEX)
	inch	mm							
JSTR-2T	1/8	3	5/16 - 24	1.6	19.6	24.6	16.7	11.1	11.1
JSTR-3T	3/16	4	3/8 - 24	3.2	21.1	25.4	17.1	11.1	12.7
JSTR-4T	1/4	6	7/16 - 20	4.4	22.6	25.4	16.7	11.1	14.2
JSTR-5T	5/16	8	1/2 - 20	6.0	24.1	26.9	17.4	14.3	15.8
JSTR-6T	3/8	10	9/16 - 18	7.5	26.9	31.8	22.3	14.3	17.4
JSTR-8T	1/2	12	3/4 - 16	9.9	31.8	35.1	24.4	19.0	22.2
JSTR-10T	5/8	16	7/8 - 14	12.3	36.8	41.1	28.4	22.2	25.4
JSTR-12T	3/4	18, 20	1 1/16 - 12	15.5	42.2	44.4	30.1	27.0	31.7
JSTR-14T	7/8	22	1 3/16 - 12	18.3	45.7	45.2	30.5	33.3	34.9
JSTR-16T	1	25	1 5/16 - 12	21.4	46.0	50.8	35.7	33.3	38.1
JSTR-20T	1-1/4	32	1 5/8 - 12	27.4	52.3	58.7	42.8	41.3	50.8
JSTR-24T	1-1/2	38	1 7/8 - 12	33.3	59.2	65.8	47.2	47.6	57.1
JSTR-32T	2	50	2 1/2 - 12	45.2	77.7	85.9	62.1	63.5	69.8

Swivel Branch Tee

JSTB

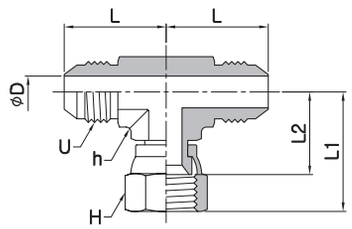

Part No.	Tube O.D		U (UN / UNF)	D	L	L1	L2	h (HEX)	H (HEX)
	inch	mm							
JSTB-2T	1/8	3	5/16 - 24	1.6	19.6	24.6	16.7	11.1	11.1
JSTB-3T	3/16	4	3/8 - 24	3.2	21.1	25.4	17.1	11.1	12.7
JSTB-4T	1/4	6	7/16 - 20	4.4	22.6	25.4	16.7	11.1	14.2
JSTB-5T	5/16	8	1/2 - 20	6.0	24.1	26.9	17.4	14.3	15.8
JSTB-6T	3/8	10	9/16 - 18	7.5	26.9	31.8	22.3	14.3	17.4
JSTB-8T	1/2	12	3/4 - 16	9.9	31.8	35.1	24.4	19.0	22.2
JSTB-10T	5/8	16	7/8 - 14	12.3	36.8	41.1	28.4	22.2	25.4
JSTB-12T	3/4	18, 20	1 1/16 - 12	15.5	42.2	44.4	30.1	27.0	31.7
JSTB-14T	7/8	22	1 3/16 - 12	18.3	45.7	45.2	30.5	33.3	34.9
JSTB-16T	1	25	1 5/16 - 12	21.4	46.0	50.8	35.7	33.3	38.1
JSTB-20T	1-1/4	32	1 5/8 - 12	27.4	52.3	58.7	42.8	41.3	50.8
JSTB-24T	1-1/2	38	1 7/8 - 12	33.3	59.2	65.8	47.2	47.6	57.1
JSTB-32T	2	50	2 1/2 - 12	45.2	77.7	85.9	62.1	63.5	69.8

Nut

JN

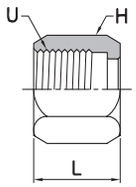

Part No.	Tube O.D		U (UN /UNF)	L	H (HEX)
	inch	mm			
JN-2T	1/8	-	5/16 - 24	14.0	9.5
JN-3T	3/16	-	3/8 - 24	15.5	11.0
JN-4T	1/4	6	7/16 - 20	15.8	14.3
JN-5T	5/16	8	1/2 - 20	17.3	15.8
JN-6T	3/8	10	9/16 - 18	18.5	17.4
JN-8T	1/2	12	3/4 - 16	21.6	22.2
JN-10T	5/8	16	7/8 - 14	24.9	25.4
JN-12T	3/4	18	1 1/16 - 12	26.2	31.7
JN-20M	-	20	1 1/16 - 12	26.2	31.7
JN-14T	7/8	22	1 3/16 - 12	27.7	34.9
JN-16T	1	25	1 5/16 - 12	28.7	38.1
JN-20T	1-1/4	32	1 5/8 - 12	31.2	50.8
JN-24T	1-1/2	38	1 7/8 - 12	36.1	57.1
JN-32T	2	50	2 1/2 - 12	44.5	73.0

Sleeve

JS

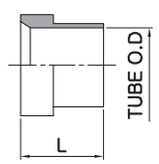

Part No.	Tube O.D inch	L
JS-2T	1/8	8.6
JS-3T	3/16	8.6
JS-4T	1/4	10.4
JS-5T	5/16	11.2
JS-6T	3/8	12.7
JS-8T	1/2	14.2
JS-10T	5/8	16.8
JS-12T	3/4	17.3
JS-14T	7/8	19.3
JS-16T	1	19.8
JS-20T	1-1/4	23.1
JS-24T	1-1/2	28.4
JS-32T	2	30.2

Part No.	Tube O.D metric	L
JS-3M	3	8.6
JS-4M	4	8.6
JS-6M	6	10.4
JS-8M	8	11.2
JS-10M	10	12.7
JS-12M	12	14.2
JS-16M	16	16.8
JS-18M	18	17.3
JS-20M	20	17.3
JS-22M	22	19.3
JS-25M	25	19.8
JS-32M	32	23.1
JS-38M	38	28.4

Plug

JP

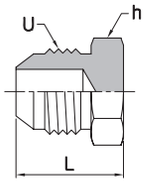

Part No.	Tube O.D		U (UN / UNF)	L	H (HEX)
	inch	mm			
JP-2T	1/8	3	5/16 - 24	17.8	11.1
JP-3T	3/16	4	3/8 - 24	18.5	11.1
JP-4T	1/4	6	7/16 - 20	20.3	12.7
JP-5T	5/16	8	1/2 - 20	20.3	14.2
JP-6T	3/8	10	9/16 - 18	21.3	15.8
JP-8T	1/2	12	3/4 - 16	23.9	20.6
JP-10T	5/8	16	7/8 - 14	27.9	23.8
JP-12T	3/4	18, 20	1 1/16 - 12	32.5	28.5
JP-14T	7/8	22	1 3/16 - 12	33.3	31.7
JP-16T	1	25	1 5/16 - 12	33.8	34.9
JP-20T	1-1/4	32	1 5/8 - 12	36.8	46.0
JP-24T	1-1/2	38	1 7/8 - 12	41.9	50.8
JP-32T	2	50	2 1/2 - 12	52.1	70.0

Cap

JCA

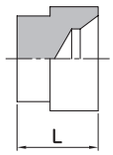

Part No.	Tube O.D		L
	inch	mm	
JCA-2T	1/8	3	9.5
JCA-3T	3/16	4	9.5
JCA-4T	1/4	6	8.7
JCA-5T	5/16	8	10.3
JCA-6T	3/8	10	11.9
JCA-8T	1/2	12	13.5
JCA-10T	5/8	16	13.5
JCA-12T	3/4	18, 20	16.7
JCA-14T	7/8	22	15.9
JCA-16T	1	25	15.9
JCA-20T	1-1/4	32	19.1
JCA-24T	1-1/2	38	23.8
JCA-32T	2	50	30.1

Fitting Port Reducer

JPR

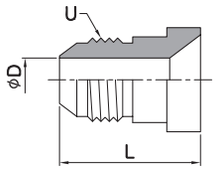

Part No.	Tube O.D inch	U (UN / UNF)	D	L
JPR-6T-4T	3/8 x 1/4	7/16 - 20	4.4	24.6
JPR-8T-4T	1/2 x 1/4	7/16 - 20	4.4	25.4
JPR-8T-6T	1/2 x 3/8	9/16 - 18	7.5	25.4
JPR-10T-4T	5/8 x 1/4	7/16 - 20	4.4	26.2
JPR-10T-6T	5/8 x 3/8	9/16 - 18	7.5	26.2
JPR-12T-4T	3/4 x 1/4	7/16 - 20	4.4	27.7
JPR-12T-6T	3/4 x 3/8	9/16 - 18	7.5	27.7
JPR-12T-8T	3/4 x 1/2	3/4 - 16	10.0	30.2
JPR-16T-12T	1 x 3/4	1 1/16 - 12	15.5	37.3
JPR-20T-12T	1-1/4 x 3/4	1 1/16 - 12	15.5	38.3
JPR-20T-16T	1-1/4 x 1	1 5/16 - 12	21.4	40.3
JPR-24T-20T	1-1/2 x 1-1/4	1 5/8 - 12	27.4	42.9

Bulkhead Lock Nut

JLN

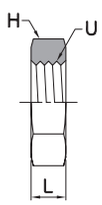

Part No.	Tube O.D inch	Tube O.D mm	U (UN / UNF)	L	H (HEX)
JLN-2T	1/8	3	5/16 - 24	5.6	14.3
JLN-3T	3/16	4	3/8 - 24	5.6	15.8
JLN-4T	1/4	6	7/16 - 20	7.1	17.4
JLN-5T	5/16	8	1/2 - 20	7.1	19.0
JLN-6T	3/8	10	9/16 - 18	6.9	20.6
JLN-8T	1/2	12	3/4 - 16	7.9	25.4
JLN-10T	5/8	16	7/8 - 14	9.1	28.5
JLN-12T	3/4	18, 20	1 1/16 - 12	10.4	34.9
JLN-14T	7/8	22	1 3/16 - 12	10.4	38.1
JLN-16T	1	25	1 5/16 - 12	10.4	41.2
JLN-20T	1-1/4	32	1 5/8 - 12	10.4	47.6
JLN-24T	1-1/2	38	1 7/8 - 12	10.4	53.9
JLN-32T	2	50	2 1/2 - 12	10.4	69.8

SCO O-Ring Face Seal Fittings

The best partner for value creation
We support the innovations of customer

05

Catalogue No. S-LOK Mar.2024

Features

- Designed for quick assembly in pipe, tube and welded systems.
- Easy installation and disassembly
- Leak-tight from vacuum to positive pressure
- Wide range of temperature up to 550°F
- Smooth finish on gland face
- Nuts with two test ports
- Silver plated nut thread

Technical Data

Pressure Ratings

- Pressure ratings comply with calculations in accordance with ASME B31.3 and ASME B31.1.

Temperature Ratings

- Temperature ratings are determined by the O-ring materials.
- Fluorocarbon FKM O-ring is standard.
- Other o-ring materials are available upon request.
- Refer to the table below for the temperature range for o-ring materials.

O-Ring Material	Temperature Rating ℉ (℃)
Fluorocarbon FKM	400 (204)
Buna N	250 (121)
Perfluoroelastomer	550 (287)
Ethylene propylene	300 (148)
PTFE	450 (232)

Typical Assembly

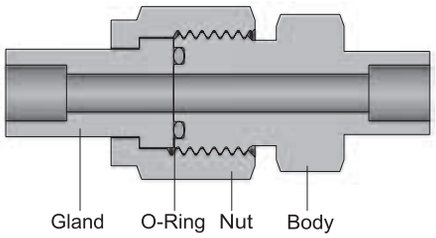

Standard Materials of Construction

Component	Material
Bodies	316 Stainless Steel
Glands	316 Stainless Steel
Nuts	316 Stainless Steel
Automatic tube weld fittings	316L Stainless Steel
O-ring for SCO bodies	Fluorocarbon FKM (75 durometer)
O-ring for SAE/MS threads	Fluorocarbon FKM (90 durometer)

O-Ring Uniform Size Number

Fluorocarbon FKM O-ring (Hardness Share A 75) is standard on SCO bodies.

SCO Size inch	O-Ring Uniform Size Number
1/4 (& 1/8)	010
1/2 (& 3/8)	111
3/4	116
1	215

Fluorocarbon FKM O-ring (Hardness Share A 90) is standard on SAE/MS threads.

SAE/MS Thread Size	O-Ring Uniform Size Number
7/16 – 20	904
9/16 – 18	906
3/4 – 16	908
1-1/16 – 12	912
1-5/16 – 12	916

Helium Leak Testing

- **Maximum leak rate : 4 x 10^{-9} std cm^3/s**

Ordering Information and Dimension

SCO	-	BU	-	8	-	8T	-	NBR	-	S6
SCO Fitting		Product Type		SCO Size		Tube Size		O-Ring Material		Body Material

• **O-Ring Material**
- **Nil** : Fluorocarbon FKM
- **NBR** : Buna N
- **KA** : Perfluoroelastomer
- **EP** : Ethylene propylene
- **TE** : PTFE

• **Body Material**
- **S6** : SS316
- **S6L** : SS316L

Union Gland

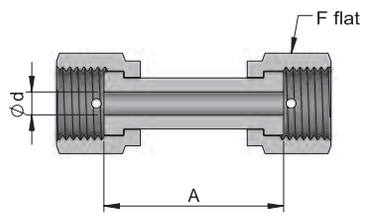

Part Number	SCO Size	Dimensions, inch (mm)			Pressure Rating psig (bar)
		d	A	F	
SCO-GU-4	1/4"	0.18(4.6)	1.42(36.1)	11/16(17.46)	10200(702)
SCO-GU-8	1/2"	0.40(10.2)	1.61(40.9)	1(25.4)	5800(399)

S-LOK Tube Connector Gland

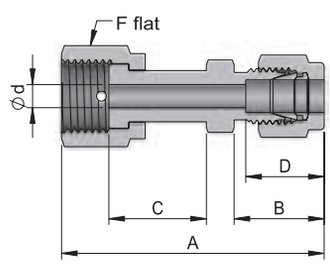

Part Number	SCO Size	Tube O.D	Dimensions, inch (mm)						Pressure Rating psig (bar)
			d	A	B	C	D	F	
SCO-GSC-4-4T	1/4"	1/4"	0.18(4.6)	1.74(44.2)	0.70(17.8)	0.77(19.6)	0.60(15.2)	11/16(17.46)	10200(702)
SCO-GSC-8-6T	1/2"	3/8"	0.28(7.1)	1.87(47.5)	0.76(19.3)	0.81(20.6)	0.66(16.8)	1(25.40)	5800(399)
SCO-GSC-8-8T	1/2"	1/2"	0.40(10.2)	2.01(51.1)	0.87(22.1)	0.81(20.6)	0.90(22.9)	1(25.40)	5800(399)
SCO-GSC-12-12T	3/4"	3/4"	0.62(15.7)	2.14(54.4)	0.87(22.1)	0.94(23.9)	0.96(24.4)	1-1/2(38.10)	4000(275)
SCO-GSC-16-16T	1"	1"	0.87(22.1)	2.45(62.2)	1.04(26.4)	0.98(24.9)	1.23(31.2)	1-3/4(44.45)	3000(206)

Tube Adapter Gland

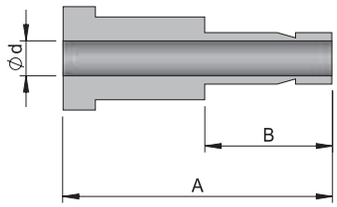

Part Number	SCO Size	Tube O.D	Dimensions, inch (mm)			Pressure Rating psig (bar)
			d	A	B	
SCO-GA-4-4T	1/4"	1/4"	0.18(4.6)	1.31(33.3)	0.64(16.3)	10200(702)
SCO-GA-8-6T	1/2"	3/8"	0.27(6.8)	1.38(35.1)	0.70(17.8)	6500(447)
SCO-GA-8-8T	1/2"	1/2"	0.37(9.3)	1.62(41.1)	0.96(24.4)	6700(461)
SCO-GA-12-12T	3/4"	3/4"	0.58(14.7)	1.80(45.7)	1.02(25.9)	5800(399)
SCO-GA-16-16T	1"	1"	0.80(20.3)	2.05(52.1)	1.30(33.0)	4700(323)

Tube Socket Weld Gland

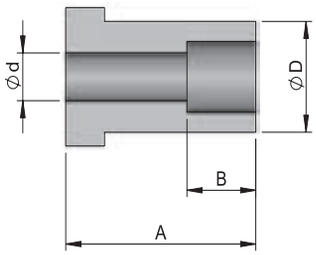

Part Number	SCO Size	Tube O.D	Dimensions, inch (mm)				Pressure Rating psig (bar)
			d	A	B	D	
SCO-GSWC-4-2T	1/4"	1/8"	0.09(2.3)	0.77(19.6)	0.10(2.5)	0.38(9.7)	15400(1061)
SCO-GSWC-4-4T	1/4"	1/4"	0.18(4.6)	0.77(19.6)	0.28(7.1)	0.38(9.7)	6800(468)
SCO-GSWC-8-6T	1/2"	3/8"	0.28(7.1)	0.81(20.6)	0.31(7.9)	0.60(15.2)	8100(558)
SCO-GSWC-8-8T	1/2"	1/2"	0.40(10.2)	0.81(20.6)	0.38(9.7)	0.73(18.5)	3000(206)
SCO-GSWC-12-12T	3/4"	3/4"	0.62(15.7)	0.94(23.9)	0.44(11.2)	0.92(23.4)	3700(255)
SCO-GSWC-16-16T	1"	1"	0.87(22.1)	0.98(24.9)	0.62(15.7)	1.19(30.2)	3000(206)

Tube Socket Weld Reducing Gland

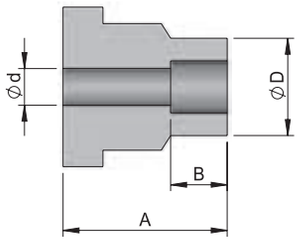

Part Number	SCO Size	Tube O.D	Dimensions, inch (mm)				Pressure Rating psig (bar)
			d	A	B	D	
SCO-GSWR-4-2T	1/4"	1/8"	0.09(2.3)	0.77(19.6)	0.10(2.5)	0.29(7.4)	12600(868)
SCO-GSWR-8-4T	1/2"	1/4"	0.18(4.6)	0.81(20.6)	0.28(7.1)	0.48(12.2)	10700(737)

Male Tube Weld Gland

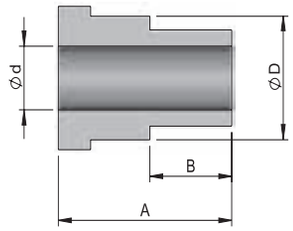

Part Number	SCO Size	Tube O.D	Dimensions, inch (mm)				Pressure Rating psig (bar)
			d	A	B	D	
SCO-GWC-4-2T	1/4"	1/8"	0.06(1.5)	0.77(19.6)	0.28(7.1)	0.38(9.7)	11200(771)
SCO-GWC-4-4T	1/4"	1/4"	0.12(3.0)	1.12(28.4)	0.41(10.4)	0.38(9.7)	11200(771)
SCO-GWC-8-4T	1/2"	1/4"	0.12(3.0)	0.91(23.1)	0.41(10.4)	0.60(15.2)	11200(771)
SCO-GWC-8-6T	1/2"	3/8"	0.23(5.8)	0.84(21.3)	0.41(10.4)	0.60(15.2)	8200(564)
SCO-GWC-8-8T	1/2"	1/2"	0.33(8.4)	1.06(26.9)	0.50(12.7)	0.60(15.2)	7500(516)

Automatic Tube Weld Gland

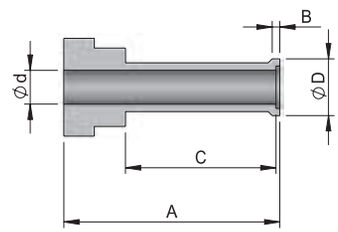

Part Number	SCO Size	Tube O.D	Dimensions, inch (mm)					Pressure Rating psig (bar)
			d	A	B	C	D	
SCO-GWAC-4-4T	1/4"	1/4"	0.18(4.6)	1.12(28.4)	0.02(0.51)	0.78(19.8)	0.29(7.4)	5100(351)
SCO-GWAC-8-6T	1/2"	3/8"	0.31(7.9)	1.13(28.7)	0.03(0.76)	0.79(20.0)	0.41(10.4)	3300(227)
SCO-GWAC-8-8T	1/2"	1/2"	0.40(10.2)	1.14(29.0)	0.04(1.0)	0.80(20.3)	0.55(14.0)	3500(241)
SCO-GWAC-12-12T	3/4"	3/4"	0.65(16.5)	1.20(30.5)	0.04(1.0)	0.80(20.3)	0.80(20.3)	2200(151)
SCO-GWAC-16-16T	1"	1"	0.87(22.1)	1.41(35.8)	0.04(1.0)	1.00(25.4)	1.06(26.9)	2200(151)

Male Connector Gland

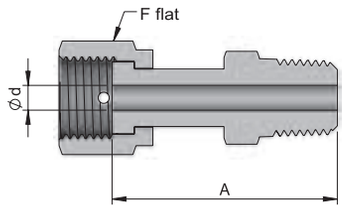

Part Number	SCO Size	NPT Size	Dimensions, inch (mm)			Pressure Rating psig (bar)
			d	A	F	
SCO-GMC-4-4N	1/4"	1/4"	0.18(4.6)	1.59(40.4)	11/16(17.46)	9800(675)
SCO-GMC-8-6N	1/2"	3/8"	0.40(10.2)	1.67(42.4)	1(25.4)	5600(385)
SCO-GMC-8-8N	1/2"	1/2"	0.40(10.2)	1.87(47.5)	1(25.4)	5600(385)
SCO-GMC-12-12N	3/4"	3/4"	0.62(15.7)	2.03(51.6)	1-1/2(38.10)	3900(268)
SCO-GMC-16-16N	1"	1"	0.87(22.1)	2.36(59.9)	1-3/4(44.45)	2900(199)

Female Connector Gland

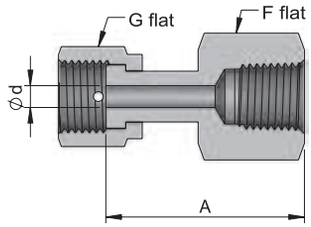

Part Number	SCO Size	NPT Size	Dimensions, inch (mm)				Pressure Rating psig (bar)
			d	A	F	G	
SCO-GFC-4-4N	1/4"	1/4"	0.18(4.6)	1.57(39.9)	3/4(19.05)	11/16(17.46)	6600(454)
SCO-GFC-8-6N	1/2"	3/8"	0.40(10.2)	1.73(43.9)	7/8(22.22)	1(25.4)	5300(365)
SCO-GFC-8-8N	1/2"	1/2"	0.40(10.2)	1.96(49.8)	1-1/16(26.98)	1(25.4)	4900(337)
SCO-GFC-12-12N	3/4"	3/4"	0.62(15.7)	2.12(53.8)	1-5/16(33.33)	1-1/2(38.10)	4000(275)
SCO-GFC-16-16N	1"	1"	0.87(22.1)	2.29(58.2)	1-5/8(41.27)	1-3/4(44.45)	3000(206)

Male SAE/MS Connector Gland

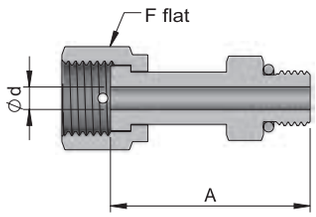

Part Number	SCO Size	Straight Thread Size	Dimensions, inch (mm)			Pressure Rating psig (bar)
			d	A	F	
SCO-GUS-4-4U	1/4"	7/16 – 20	0.18(4.6)	1.54(39.1)	11/16(17.46)	4500(310)
SCO-GUS-8-6U	1/2"	9/16 – 18	0.40(10.2)	1.64(41.7)	1(25.4)	4500(310)
SCO-GUS-8-8U	1/2"	3/4 – 16	0.40(10.2)	1.71(43.4)	1(25.4)	4500(310)
SCO-GUS-12-12U	3/4"	1-1/16 – 12	0.62(15.7)	2.07(52.6)	1-1/2(38.10)	3600(248)
SCO-GUS-16-16U	1"	1-5/16 – 12	0.87(22.1)	2.17(55.1)	1-3/4(44.45)	2900(199)

Union Body

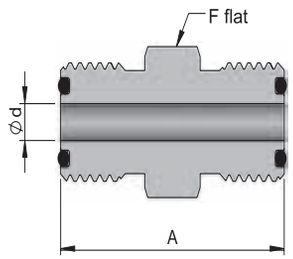

Part Number	SCO Size	Dimensions, inch (mm)			Pressure Rating psig (bar)
		d	A	F	
SCO-BU-4	1/4"	0.18(4.6)	1.25(31.8)	5/8(15.87)	14300(985)
SCO-BU-8	1/2"	0.40(10.2)	1.50(38.1)	15/16(23.81)	11100(764)

Reducing Union Body

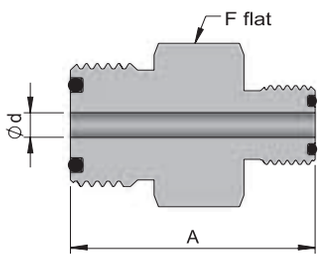

Part Number	SCO Size 1	SCO Size 2	Dimensions, inch (mm)			Pressure Rating psig (bar)
			d	A	F	
SCO-BUR-8-4	1/2"	1/4"	0.18(4.6)	1.43(36.3)	15/16(23.81)	11100(764)

S-LOK Tube Fitting Connector Body

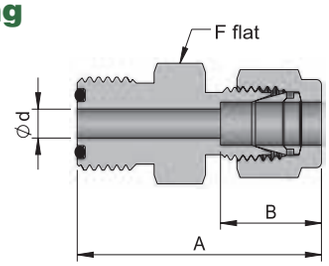

Part Number	SCO Size	Tube O.D	Dimensions, inch (mm)				Pressure Rating psig (bar)
			d	A	B	F	
SCO-BSC-4-2T	1/4"	1/8"	0.09(2.3)	1.38(35.1)	0.51(13.0)	5/8(15.87)	10900(751)
SCO-BSC-4-4T	1/4"	1/4"	0.18(4.6)	1.47(37.3)	0.60(15.2)	5/8(15.87)	10200(702)
SCO-BSC-8-6T	1/2"	3/8"	0.28(7.1)	1.65(41.9)	0.66(16.8)	15/16(23.81)	6500(447)
SCO-BSC-8-8T	1/2"	1/2"	0.40(10.2)	1.78(45.2)	0.90(22.9)	15/16(23.81)	6700(461)
SCO-BSC-12-12T	3/4"	3/4"	0.62(15.7)	1.86(47.2)	0.96(24.4)	1-5/16(33.33)	5800(399)
SCO-BSC-16-16T	1"	1"	0.87(22.1)	2.06(52.3)	1.23(31.2)	1-5/8(41.27)	4700(323)

Elbow Body

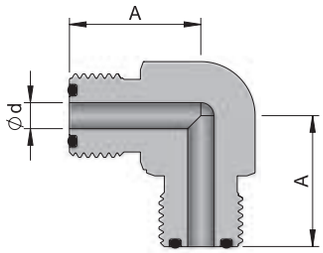

Part Number	SCO Size	Dimensions, inch (mm)		Pressure Rating psig (bar)
		d	A	
SCO-BL-4	1/4"	0.18(4.6)	0.96(24.4)	14300(985)
SCO-BL-8	1/2"	0.40(10.2)	1.26(32.0)	11100(764)
SCO-BL-12	3/4"	0.62(15.7)	1.48(37.6)	10900(751)
SCO-BL-16	1"	0.87(22.1)	1.56(39.6)	8800(606)

Tee Body

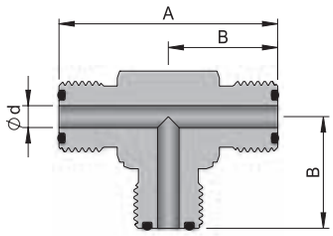

Part Number	SCO Size	Dimensions, inch (mm)			Pressure Rating psig (bar)
		d	A	B	
SCO-BT-4	1/4"	0.18(4.6)	1.92(48.8)	0.96(24.4)	14300(985)
SCO-BT-8	1/2"	0.40(10.2)	2.52(64.0)	1.26(32.0)	11100(764)
SCO-BT-12	3/4"	0.62(15.7)	2.96(75.2)	1.48(37.6)	10900(751)
SCO-BT-16	1"	0.87(22.1)	3.12(79.2)	1.56(39.6)	8800(606)

Bulkhead Union Body

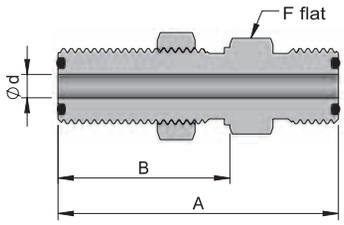

Part Number	SCO Size	Dimensions, inch (mm)						Pressure Rating psig (bar)
		d	A	B	F	Panel Hole Drill Size	Max. Panel Thickness	
SCO-BBU-4	1/4"	0.18(4.6)	1.88(47.8)	1.06(26.9)	3/4(19.05)	37/64(14.68)	0.36(9.1)	14300(985)
SCO-BBU-8	1/2"	0.40(10.2)	2.09(53.1)	1.19(30.2)	1-1/16(26.98)	57/64(22.62)	0.40(10.2)	11100(764)

S-LOK Tube Fitting Bulkhead Connector Body

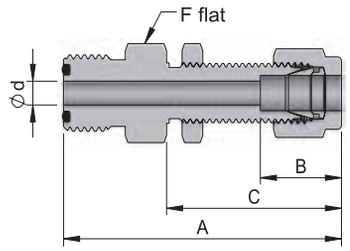

Part Number	SCO Size	Tube O.D	Dimensions, inch (mm)							Pressure Rating psig (bar)
			d	A	B	C	F	Panel Hole Drill Size	Max. Panel THK.	
SCO-BSCB-4-4T	1/4"	1/4"	0.18(4.6)	2.10(53.3)	0.60(15.2)	1.32(33.5)	5/8(15.87)	29/64(11.50)	0.40(10.2)	10200(702)
SCO-BSCB-8-6T	1/2"	3/8"	0.28(7.1)	2.34(59.4)	0.66(16.8)	1.45(36.8)	15/16(23.81)	37/64(14.68)	0.44(11.2)	6500(447)
SCO-BSCB-8-8T	1/2"	1/2"	0.40(10.2)	2.55(64.8)	0.90(22.9)	1.65(41.9)	15/16(23.81)	49/64(19.44)	0.50(12.7)	6700(461)
SCO-BSCB-12-12T	3/4"	3/4"	0.62(15.7)	2.86(72.6)	0.96(24.4)	1.87(47.5)	1-5/16(33.33)	1-1/64(25.79)	0.66(16.8)	5800(399)
SCO-BSCB-16-16T	1"	1"	0.87(22.1)	3.29(83.6)	1.23(31.2)	2.26(57.4)	1-5/8(41.27)	1-21/64(33.73)	0.75(19.0)	4700(323)

S-LOK Tube Fitting Elbow Body

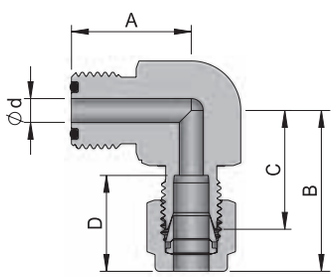

Part Number	SCO Size	Tube O.D	Dimensions, inch (mm)					Pressure Rating psig (bar)
			d	A	B	C	D	
SCO-BSL-4-4T	1/4"	1/4"	0.18(4.6)	0.96(24.4)	1.19(30.2)	0.90(22.9)	0.60(15.2)	10200(702)
SCO-BSL-8-6T	1/2"	3/8"	0.28(7.1)	1.26(32.0)	1.39(35.3)	1.10(27.9)	0.66(16.8)	6500(447)
SCO-BSL-8-8T	1/2"	1/2"	0.40(10.2)	1.26(32.0)	1.50(38.1)	1.10(27.9)	0.90(22.9)	6700(461)
SCO-BSL-12-12T	3/4"	3/4"	0.62(15.7)	1.48(37.6)	1.80(45.7)	1.40(35.6)	0.96(24.4)	5800(399)
SCO-BSL-16-16T	1"	1"	0.87(22.1)	1.56(39.6)	2.04(51.8)	1.56(39.6)	1.23(31.2)	4700(323)

Tube Socket Weld Body

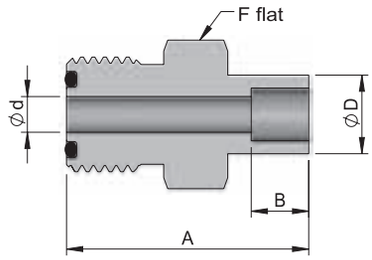

Part Number	SCO Size	Tube O.D	Dimensions, inch (mm)					Pressure Rating psig (bar)
			d	A	B	D	F	
SCO-BSWC-4-2T	1/4"	1/8"	0.09(2.3)	0.88(22.4)	0.10(2.5)	0.29(7.4)	5/8(15.87)	12600(868)
SCO-BSWC-4-4T	1/4"	1/4"	0.18(4.6)	1.09(27.7)	0.28(7.1)	0.38(9.7)	5/8(15.87)	6800(468)
SCO-BSWC-8-6T	1/2"	3/8"	0.28(7.1)	1.28(32.5)	0.31(7.9)	0.60(15.2)	15/16(23.81)	8100(558)
SCO-BSWC-8-8T	1/2"	1/2"	0.40(10.2)	1.34(34.0)	0.38(9.7)	0.73(18.5)	15/16(23.81)	3000(206)
SCO-BSWC-12-12T	3/4"	3/4"	0.62(15.7)	1.50(38.1)	0.44(11.2)	0.92(23.4)	1-5/16(33.33)	3700(254)
SCO-BSWC-16-16T	1"	1"	0.87(22.1)	1.72(43.7)	0.62(15.7)	1.19(30.2)	1-5/8(41.27)	3000(206)

Automatic Tube Weld Body

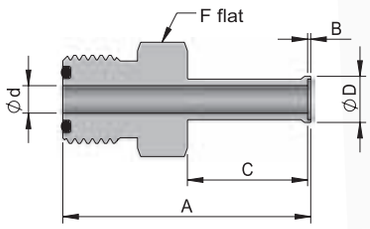

Part Number	SCO Size	Tube O.D	Dimensions, inch (mm)						Pressure Rating psig (bar)
			d	A	B	C	D	F	
SCO-BWAC-4-4T	1/4"	1/4"	0.18(4.6)	1.59(40.4)	0.02(0.51)	0.78(19.8)	0.29(7.4)	5/8(15.87)	5100(351)
SCO-BWAC-8-6T	1/2"	3/8"	0.31(7.9)	1.74(44.2)	0.03(0.76)	0.79(20.0)	0.41(10.4)	15/16(23.81)	3300(227)
SCO-BWAC-8-8T	1/2"	1/2"	0.40(10.2)	1.75(44.4)	0.04(1.0)	0.80(20.3)	0.55(14.0)	15/16(23.81)	3500(241)
SCO-BWAC-12-12T	3/4"	3/4"	0.65(16.5)	1.78(45.2)	0.04(1.0)	0.80(20.3)	0.80(20.3)	1-5/16(33.33)	2200(151)
SCO-BWAC-16-16T	1"	1"	0.87(22.1)	20.3(51.6)	0.04(1.0)	1.00(25.4)	1.06(26.9)	1-5/8(41.27)	2200(151)

Male Connector Body

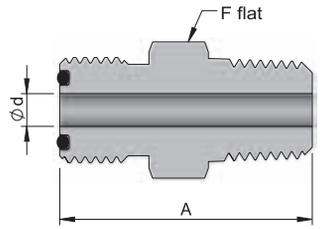

Part Number	SCO Size	NPT Size	Dimensions, inch (mm)			Pressure Rating psig (bar)
			d	A	F	
SCO-BMC-4-2N	1/4"	1/8"	0.18(4.6)	1.16(29.5)	5/8(15.87)	10000(689)
SCO-BMC-4-4N	1/4"	1/4"	0.18(4.6)	1.34(34.0)	5/8(15.87)	13400(923)
SCO-BMC-8-6N	1/2"	3/8"	0.38(9.7)	1.46(37.1)	15/16(23.81)	7800(537)
SCO-BMC-8-8N	1/2"	1/2"	0.40(10.2)	1.65(41.9)	15/16(23.81)	10000(689)
SCO-BMC-12-12N	3/4"	3/4"	0.62(15.7)	1.75(44.4)	1-5/16(33.33)	7300(502)
SCO-BMC-16-16N	1"	1"	0.87(22.1)	1.97(50.0)	1-5/8(41.27)	5300(365)

Female Connector Body

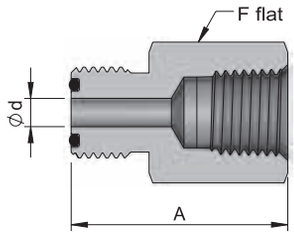

Part Number	SCO Size	NPT Size	Dimensions, inch (mm)			Pressure Rating psig (bar)
			d	A	F	
SCO-BFC-4-2N	1/4"	1/8"	0.18(4.6)	1.25(31.8)	5/8(15.87)	8400(578)
SCO-BFC-4-4N	1/4"	1/4"	0.18(4.6)	1.39(35.3)	3/4(19.05)	6600(454)
SCO-BFC-8-6N	1/2"	3/8"	0.40(10.2)	1.57(39.9)	15/16(23.81)	6600(454)
SCO-BFC-8-8N	1/2"	1/2"	0.40(10.2)	1.77(45.0)	1-1/16(26.98)	4900(337)
SCO-BFC-12-12N	3/4"	3/4"	0.62(15.7)	1.93(49.0)	1-5/16(33.33)	4600(316)
SCO-BFC-16-16N	1"	1"	0.87(22.1)	2.02(51.3)	1-5/8(41.27)	4400(303)

Male SAE/MS Connector Body

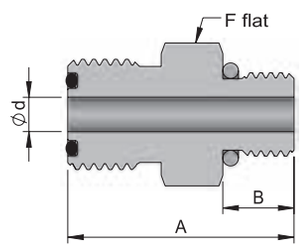

Part Number	SCO Size	Straight Thread Size	Dimensions, inch (mm)				Pressure Rating psig (bar)
			d	A	B	F	
SCO-BUS-4-4U	1/4"	7/16 – 20	0.18(4.6)	1.24(31.5)	0.36(9.1)	11/16(17.46)	4500(310)
SCO-BUS-4-6U	1/4"	9/16 – 18	0.18(4.6)	1.17(29.7)	0.39(9.9)	11/16(17.46)	4500(310)
SCO-BUS-8-4U	1/2"	7/16 – 20	0.18(4.6)	1.36(34.5)	0.36(9.1)	15/16(23.81)	4500(310)
SCO-BUS-8-6U	1/2"	9/16 – 18	0.30(7.6)	1.39(35.3)	0.39(9.9)	15/16(23.81)	4500(310)
SCO-BUS-8-8U	1/2"	3/4 – 16	0.40(10.2)	1.47(37.3)	0.44(11.2)	1(25.40)	4500(310)
SCO-BUS-12-12U	3/4"	1-1/16 – 12	0.62(15.7)	1.73(43.9)	0.59(15.0)	1-3/8(34.92)	3600(248)
SCO-BUS-16-16U	1"	1-5/16 – 12	0.85(21.6)	1.79(45.5)	0.59(15.0)	1-5/8(41.27)	2900(199)

Male Elbow Body

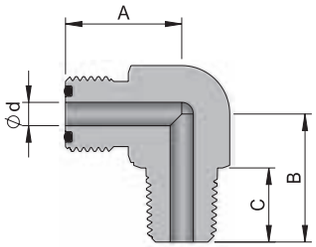

Part Number	SCO Size	NPT Size	Dimensions, inch (mm)				Pressure Rating psig (bar)
			d	A	B	C	
SCO-BLM-4-2N	1/4"	1/8"	0.18(4.6)	0.96(24.4)	0.87(22.1)	0.38(9.7)	10000(689)
SCO-BLM-4-4N	1/4"	1/4"	0.18(4.6)	0.96(24.4)	1.05(26.7)	0.56(14.2)	8000(551)
SCO-BLM-8-6N	1/2"	3/8"	0.38(9.7)	1.26(32.0)	1.26(32.0)	0.56(14.2)	7800(537)
SCO-BLM-8-8N	1/2"	1/2"	0.40(10.2)	1.26(32.0)	1.45(36.8)	0.75(19.0)	7700(530)
SCO-BLM-12-12N	3/4"	3/4"	0.62(15.7)	1.48(37.6)	1.67(42.4)	0.75(19.0)	7300(502)
SCO-BLM-16-16N	1"	1"	0.87(22.1)	1.56(39.6)	1.94(49.3)	0.94(23.9)	5300(365)

Male SAE/MS Positionable Elbow Body

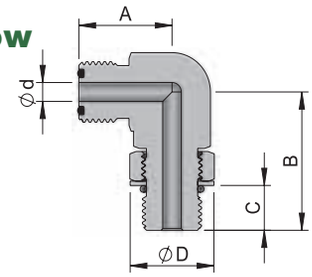

Part Number	SCO Size	Straight Thread Size	Dimensions, inch (mm)					Pressure Rating psig (bar)
			d	A	B	C	D	
SCO-BLS-4-4U	1/4"	7/16 – 20	0.18(4.6)	0.96(24.4)	1.19(30.2)	0.39(9.9)	0.65(16.5)	4500(310)
SCO-BLS-8-6U	1/2"	9/16 – 18	0.30(7.6)	1.33(33.8)	1.54(39.1)	0.44(11.2)	0.79(20.1)	3600(248)
SCO-BLS-8-8U	1/2"	3/4 – 16	0.40(10.2)	1.33(33.8)	1.65(41.9)	0.50(12.7)	1.01(25.7)	3600(248)
SCO-BLS-12-12U	3/4"	1-1/16 – 12	0.62(15.7)	1.53(38.9)	2.13(54.1)	0.66(16.8)	1.44(36.6)	2900(199)
SCO-BLS-16-16U	1"	1-5/16 – 12	0.87(22.1)	1.72(43.7)	2.31(58.7)	0.66(16.8)	1.73(43.9)	2300(158)

Blind

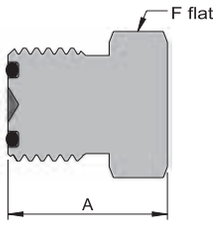

Part Number	SCO Size	Dimensions, inch (mm)	
		A	F
SCO-CAP-4	1/4"	0.77(19.6)	5/8(15.87)
SCO-CAP-8	1/2"	0.89(22.6)	15/16(23.81)
SCO-CAP-12	3/4"	0.99(25.1)	1-5/16(33.33)
SCO-CAP-16	1"	1.02(25.9)	1-5/8(41.27)

Female Nut

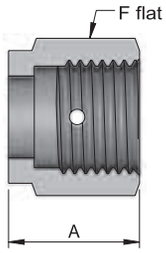

Part Number	SCO Size	Dimensions, inch (mm)	
		A	F
SCO-NUT-4	1/4"	0.66(16.8)	11/16(17.46)
SCO-NUT-8	1/2"	0.69(17.5)	1(25.40)
SCO-NUT-12	3/4"	0.81(20.6)	1-1/2(38.10)
SCO-NUT-16	1"	0.81(20.6)	1-3/4(44.45)

Blind Nut

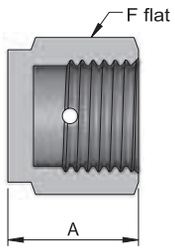

Part Number	SCO Size	Dimensions, inch (mm)	
		A	F
SCO-BLNUT-4	1/4"	0.44(11.2)	11/16(17.46)
SCO-BLNUT-8	1/2"	0.56(14.2)	1(25.40)
SCO-BLNUT-12	3/4"	0.75(19.0)	1-1/2(38.10)
SCO-BLNUT-16	1"	0.81(20.6)	1-3/4(44.45)

SCO Fitting Installation Instruction

1. Rotate the nut finger-tight.

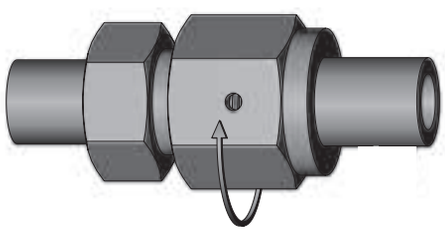

2. Tighten the nut 1/8 turn with spanner.

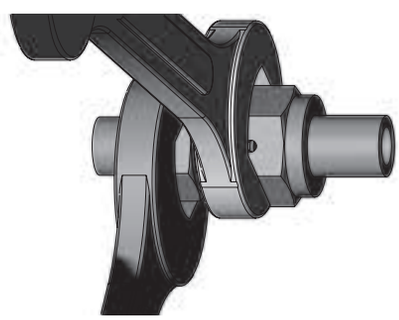

NOTE

O-ring should be removed to prevent thermal damage when welding of bodies or glands.

UHP Fittings (Clean Fittings)

The best partner for value creation
We support the innovations of customer

06

Catalogue No. S-LOK Mar.2024

Micro Weld Fittings

Tube Butt Weld Fittings

Metal Face Seal Fittings

Technical Data

Pressure Ratings

- Pressure ratings are based on allowable stress value of 20,000psi as specified in ASME B31.3 for 316 stainless steel.
- Pressure ratings of Metal Face Seal Fittings determined at room temperature with gasket materials shown.
- For pressure ratings of ASME B31.1, multiply working pressure by 0.94.
- Allowable working pressure at temperatures greater than 100°C (37°C) may be determined by multiple factors in the table below.

Material	SS316	SS316L
Temperature, ℉ (℃)	Factor	
-20 (28) to 100 (37)	1.00	1.00
200 (93)	1.00	0.83
400 (204)	0.96	0.77
600 (315)	0.85	0.67
800 (426)	0.79	0.62
1000 (537)	0.76	0.56

Cleaning and Packaging

- Passivation in a nitric environment
- Ultra-sonic cleaning with minimum 18M of D.I water after passivation.
- All fittings are double packaged in the clean room.
- Sealing parts are protected with a plastic cap.

Temperature Ratings

Components	Material	Temperature ℉ (℃)
Fittings	316 Stainless Steel & 316L Stainless Steel	1000 (537)
	316L Stainless Steel Single Melt	
	316L Stainless Steel Double Melt	
Gaskets	316L Stainless Steel	1000 (537)
	Nickel	600 (315)

Materials

Material	Designator	Specifications
316 Stainless Steel	S6	Bar Stock : ASTM A479 ASTM A276 Forging : ASTM A182
316L Stainless Steel	S6L	
316L Stainless Steel Single Melt (VOD)	S6LS	Bar Stock : ASTM A479 ASTM A276 Forging : ASTM A182 SEMI SPEC. F20-0706E JIS SPEC. Chemical Composition
316L Stainless Steel Double Melt (VAR)	S6LV	
316L Stainless Steel Double Melt (VIM/VAR)	S6LVV	

Product Grade

Level	Inner Surface Roughness	
	Ra	Ry
EP	≤ 5 μ inch	≤ 0.7 μm
BA	≤ 10 μ inch	≤ 3.0 μm
AP	≤ 100 μ inch	≤ 25 μm

Chemical Composition

Element	Composition, Wt%									
	C	Si	Mn	P	S	Ni	Cr	Mo	Cu	Al
SS316L Singe Melt	≤ 0.03	≤ 1.0	≤ 0.8	≤ 0.045	≤ 0.005	12.0~15.0	16.0~18.0	2.0~3.0	≤ 0.3	-
SS316L Double Melt	≤ 0.025	≤ 0.3	≤ 0.4	≤ 0.045	≤ 0.005	14.5~15.0	16.0~17.0	2.2~2.5	≤ 0.03	≤ 0.01
SS316L VIM/VAR	≤ 0.01	≤ 0.2	≤ 0.05	≤ 0.02	≤ 0.003	14.5~15.0	16.5~17.0	2.2~2.5	≤ 0.2	≤ 0.01

Micro Weld Fittings

Features

- Compact design for mainly gas line
- Suitable for miniature tubing system
- Allows close component spacing
- Provides flow capacity equal to larger weld fittings

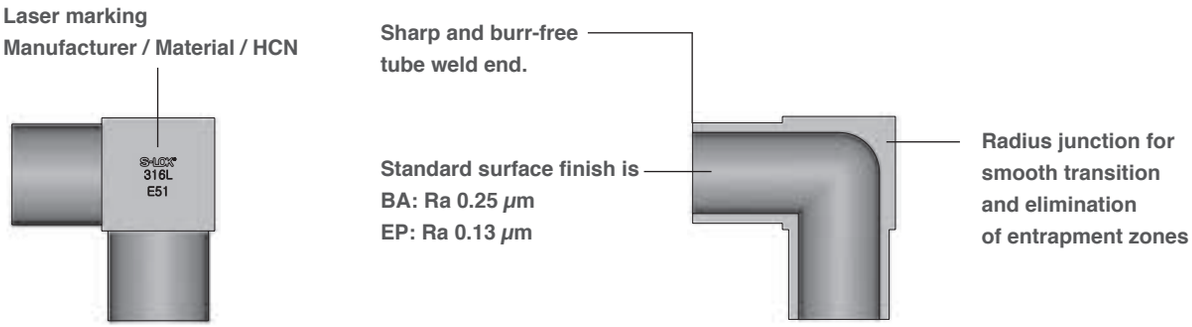

Ordering Information

C	-	ML	-	8	-	EP	-	S6LS
Clean Fitting		Product Type		Connection Size		Product Grade		Material

Clean Fitting	Product Type	Connection Size	Product Grade	Body Material
- **C** : S-LOK UHP Product	Refer to the basic ordering number in the dimension table.	- **4** : 1/4” - **6** : 3/8” - **8** : 1/2” - **12** : 3/4”	- **BA** : BA - **EP** : EP	- **S6LS** : SS316L Single Melt - **S6LV** : SS316L Double Melt

Micro Elbow

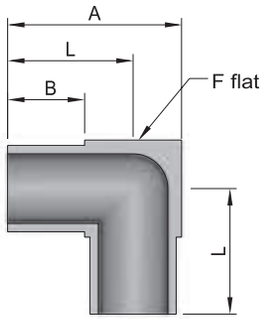

Basic Ordering Number	Tube O.D	Wall THK.	Dimensions, mm (inch)				Pressure Rating bar (psig)
			A	B	L	F	
C-ML-2	1/8”	0.028”	14.4 (0.56)	6.4 (0.25)	10.4 (0.41)	7.94 (5/16)	585 (8500)
C-ML-4	1/4"	1mm	14.4 (0.56)	6.4 (0.25)	10.4 (0.41)	7.94 (5/16)	351 (5100)
C-ML-4T35		0.035"					
C-ML-6	3/8"	1mm	17.4 (0.69)	6.4 (0.25)	11.9 (0.47)	11.11 (7/16)	227 (3300)
C-ML-6T35		0.035"					
C-ML-8	1/2"	0.049"	20.6 (0.81)	6.4 (0.25)	13.5 (0.53)	14.28 (9/16)	254 (3700)
C-ML-12	3/4"	0.065"	27.0 (1.06)	6.4 (0.25)	16.7 (0.66)	20.64 (13/16)	165 (2400)

Micro 45° Elbow

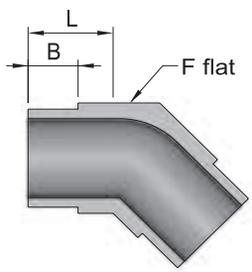

Basic Ordering Number	Tube O.D	Wall THK.	Dimensions, mm (inch)			Pressure Rating bar (psig)
			B	L	F	
C-MLB-4	1/4"	1mm	6.35 (0.25)	10.10 (0.40)	7.94 (5/16)	351 (5100)
C-MLB-4T35	1/4"	0.035"	6.35 (0.25)	10.10 (0.40)	7.94 (5/16)	351 (5100)
C-MLB-6	3/8"	1mm	6.35 (0.25)	11.91 (0.47)	11.11 (7/16)	227 (3300)
C-MLB-6T35	3/8"	0.035"	6.35 (0.25)	11.91 (0.47)	11.11 (7/16)	227 (3300)
C-MLB-8	1/2"	0.049"	6.35 (0.25)	13.50 (0.53)	14.29 (9/16)	254 (3700)

Micro Reducing Elbow

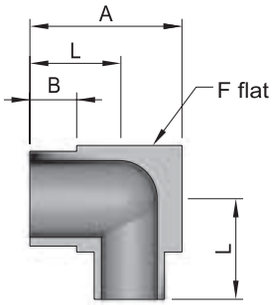

Basic Ordering Number	Tube O.D 1 x Wall THK.	Tube O.D 2 x Wall THK.	Dimensions, mm (inch)				Pressure Rating bar (psig)
			A	B	L	F	
C-MRL-4-2	1/4” x 1mm	1/8” x 0.028”	14.4 (0.56)	6.4 (0.25)	10.4 (0.41)	7.94 (5/16)	351 (5100)
C-MRL-6-4	3/8" x 1mm	1/4" x 1mm	17.4 (0.69)	6.4 (0.25)	11.9 (0.47)	11.11 (7/16)	227 (3300)
C-MRL-6-4-035	3/8" x 0.035"	1/4" x 0.035"					
C-MRL-8-4	1/2" x 0.049"	1/4" x 1mm	20.6 (0.81)	6.4 (0.25)	13.5 (0.53)	14.28 (9/16)	254 (3700)
C-MRL-8-4T35		1/4" x 0.035"					
C-MRL-8-6	1/2" x 0.049"	3/8" x 1mm	20.6 (0.81)	6.4 (0.25)	13.5 (0.53)	14.28 (9/16)	227 (3300)
C-MRL-8-6T35		3/8" x 0.035"					
C-MRL-12-4	3/4" x 0.065"	1/4" x 1mm	27.0 (1.06)	6.4 (0.25)	16.7 (0.66)	20.64 (13/16)	165 (2400)
C-MRL-12-6		3/8" x 1mm					
C-MRL-12-8		1/2" x 0.049"					

Micro Tee

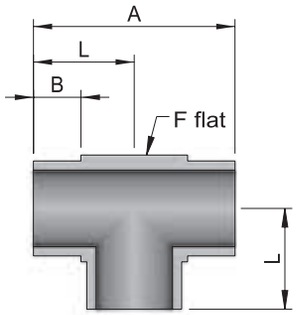

Basic Ordering Number	Tube O.D	Wall THK.	Dimensions, mm (inch)				Pressure Rating bar (psig)
			A	B	L	F	
C-MT-2	1/8”	0.028”	20.8 (0.82)	6.4 (0.25)	10.4 (0.41)	7.94 (5/16)	585 (8500)
C-MT-4	1/4"	1mm	20.8 (0.82)	6.4 (0.25)	10.4 (0.41)	7.94 (5/16)	351 (5100)
C-MT-4T35		0.035"					
C-MT-6	3/8"	1mm	23.8 (0.94)	6.4 (0.25)	11.9 (0.47)	11.11 (7/16)	227 (3300)
C-MT-6T35		0.035"					
C-MT-8	1/2"	0.049"	27.0 (1.06)	6.4 (0.25)	13.5 (0.53)	14.28 (9/16)	254 (3700)
C-MT-12	3/4"	0.065"	33.4 (1.31)	6.4 (0.25)	16.7 (0.66)	20.64 (13/16)	165 (2400)

Micro Reducing Tee

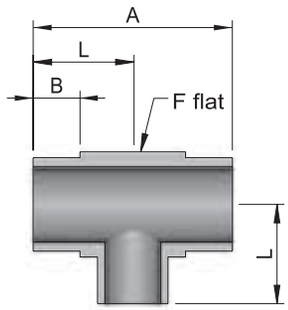

Basic Ordering Number	Tube O.D 1 x Wall THK.	Tube O.D 2 x Wall THK.	Dimensions, mm (inch)				Pressure Rating bar (psig)
			A	B	L	F	
C-MRT-4-2	1/4” x 1mm	1/8” x 0.028”	20.8 (0.82)	6.4 (0.25)	10.4 (0.41)	7.94 (5/16)	351 (5100)
C-MRT-6-4	3/8" x 1mm	1/4" x 1mm	23.8 (0.94)	6.4 (0.25)	11.9 (0.47)	11.11 (7/16)	227 (3300)
C-MRT-6-4-035	3/8" x 0.035"	1/4" x 0.035"					
C-MRT-8-4	1/2" x 0.049"	1/4" x 1mm	27.0 (1.06)	6.4 (0.25)	13.5 (0.53)	14.28 (9/16)	254 (3700)
C-MRT-8-4T35		1/4" x 0.035"					
C-MRT-8-6	1/2" x 0.049"	3/8" x 1mm	27.0 (1.06)	6.4 (0.25)	13.5 (0.53)	14.28 (9/16)	227 (3300)
C-MRT-8-6T35		3/8" x 0.035"					
C-MRT-12-4	3/4" x 0.065"	1/4" x 1mm	33.4 (1.31)	6.4 (0.25)	16.7 (0.66)	20.64 (13/16)	165 (2400)
C-MRT-12-6		3/8" x 1mm					
C-MRT-12-8		1/2" x 0.049"					

Micro Cross

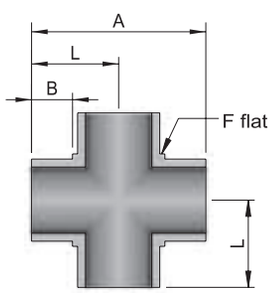

Basic Ordering Number	Tube O.D	Wall THK.	Dimensions, mm (inch)				Pressure Rating bar (psig)
			A	B	L	F	
C-MX-4	1/4"	1mm	20.8 (0.82)	6.4 (0.25)	10.4 (0.41)	7.94 (5/16)	351 (5100)
C-MX-4T35		0.035"					
C-MX-6	3/8"	1mm	23.8 (0.94)	6.4 (0.25)	11.9 (0.47)	11.11 (7/16)	227 (3300)
C-MX-6T35		0.035"					
C-MX-8	1/2"	0.049"	27.0 (1.06)	6.4 (0.25)	13.5 (0.53)	14.28 (9/16)	254 (3700)

Micro Tribow

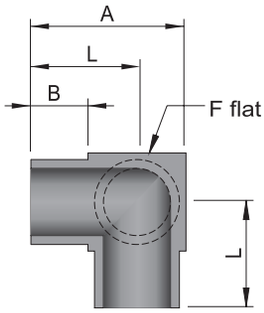

Basic Ordering Number	Tube O.D	Wall THK.	Dimensions, mm (inch)				Pressure Rating bar (psig)
			A	B	L	F	
C-MTB-4	1/4"	1mm	14.4 (0.56)	6.4 (0.25)	10.4 (0.41)	7.94 (5/16)	351 (5100)
C-MTB-4T35		0.035"					
C-MTB-6	3/8"	1mm	17.4 (0.69)	6.4 (0.25)	11.9 (0.47)	11.11 (7/16)	227 (3300)
C-MTB-6T35		0.035"					
C-MTB-8	1/2"	0.049"	20.6 (0.81)	6.4 (0.25)	13.5 (0.53)	14.28 (9/16)	254 (3700)

Micro Reducing Union

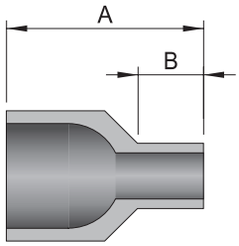

Basic Ordering Number	Tube O.D 1 x Wall THK.	Tube O.D 2 x Wall THK.	Dimensions, mm (inch)		Pressure Rating bar (psig)
			A	B	
C-MRU-6-4	3/8" x 1mm	1/4" x 1mm	19.1(0.75)	6.4 (0.25)	227 (3300)
C-MRU-6-4-035	3/8" x 0.035"	1/4" x 0.035"			
C-MRU-8-4	1/2" x 0.049"	1/4" x 1mm	19.1 (0.75)	6.4 (0.25)	254 (3700)
C-MRU-8-4T35		1/4" x 0.035"			
C-MRU-8-6	1/2" x 0.049"	3/8" x 1mm	19.1 (0.75)	6.4 (0.25)	227 (3300)
C-MRU-8-6T35		3/8" x 0.035"			
C-MRU-12-4	3/4" x 0.065"	1/4" x 1mm	19.1 (0.75)	6.4 (0.25)	165 (2400)
C-MRU-12-6		3/8" x 1mm			
C-MRU-12-8		1/2" x 0.049"			

Tube Butt Weld Fittings

Features

- Square, sharp, burr-free tube weld ends
- Laser marking – Manufacturer, Material, HCN
- Machined for optimal tube butt welding suitable automatic TIG welder.

Tube Butt Weld Fitting

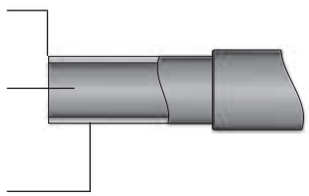

Automatic Tube Butt Weld Fitting

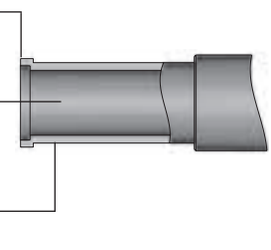

Ordering Information

C	-	LL	-	8	-	EP	-	S6LS
Clean Fitting		Product Type		Connection Size		Product Grade		Material

Clean Fitting	Product Type	Connection Size	Product Grade	Body Material
- **C** : S-LOK UHP Product	Refer to the basic ordering number in the dimension table.	- **4** : 1/4” - **6** : 3/8” - **8** : 1/2” - **12** : 3/4” - **16** : 1”	- **BA** : BA - **EP** : EP	- **S6LS** : SS316L Single Melt - **S6LV** : SS316L Double Melt

Long Elbow

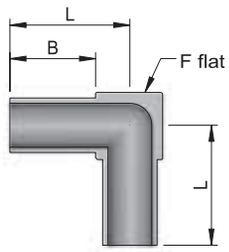

Basic Ordering Number	Tube O.D	Wall THK.	Dimensions, mm (inch)			Pressure Rating bar (psig)
			B	L	F	
C-LL-4	1/4"	1mm	19.1 (0.75)	25.0 (0.98)	11.1 (0.44)	351 (5100)
C-LL-4T35		0.035"				
C-LL-4-L10		1mm	10.0 (0.39)	15.9 (0.63)		
C-LL-6	3/8"	1mm	19.1 (0.75)	25.0 (0.98)	11.1 (0.44)	227 (3300)
C-LL-6T35		0.035"				
C-LL-6-L10		1mm	10.0 (0.39)	15.9 (0.63)		
C-LL-8	1/2"	0.049"	19.1 (0.75)	29.0 (1.14)	17.0 (0.67)	254 (3700)
C-LL-8-L10			10.0 (0.39)	19.9 (0.78)		
C-LL-12	3/4"	0.065"	22.5 (0.89)	33.5 (1.32)	25.0 (0.98)	165 (2400)
C-LL-12T49		0.049"				
C-LL-12-L10		0.065"	10.0 (0.39)	22.4 (0.88)		
C-LL-16	1"	0.065"	23.3 (0.92)	38.3 (1.51)	30.0 (1.18)	165 (2400)

Long Reducing Elbow

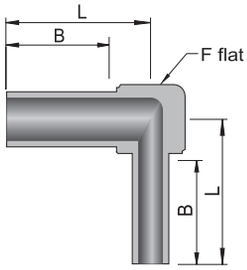

Basic Ordering Number	Tube O.D 1 x Wall THK.	Tube O.D 2 x Wall THK.	Dimensions, mm (inch)			Pressure Rating bar (psig)
			B	L	F	
C-LRL-6-4	3/8" x 1mm	1/4" x 1mm	19.1 (0.75)	25.0 (0.98)	11.1 (0.44)	227 (3300)
C-LRL-6-4-035	3/8" x 0.035"	1/4" x 0.035"				
C-LRL-6-4-L10	3/8" x 1mm	1/4" x 1mm	10.0 (0.39)	15.9 (0.63)		
C-LRL-8-4	1/2" x 0.049"	1/4" x 1mm	19.1 (0.75)	29.0 (1.14)	17.0 (0.67)	254 (3700)
C-LRL-8-4T35		1/4" x 0.035"				
C-LRL-8-4-L10		1/4" x 1mm	10.0 (0.39)	19.9 (0.78)		
C-LRL-8-6	1/2" x 0.049"	3/8" x 1mm	19.1 (0.75)	29.0 (1.14)	17.0 0.67)	227 (3300)
C-LRL-8-6T35		3/8" x 0.035"				
C-LRL-8-6-L10		3/8" x 1mm	10.0 (0.39)	19.9 (0.78)		
C-LRL-12-4	3/4" x 0.065"	1/4" x 1mm	22.5 (0.89)	33.5 (1.32)	25.0 (0.98)	165 (2400)
C-LRL-12-4T35		1/4" x 0.035"				
C-LRL-12-4-L10		1/4" x 1mm	10.0 (0.39)	22.4 (0.88)		
C-LRL-16-8	1" x 0.065"	1/2" x 0.049"	23.3 (0.92)	38.3 (1.51)	30.0 (1.18)	165 (2400)

Long Tee

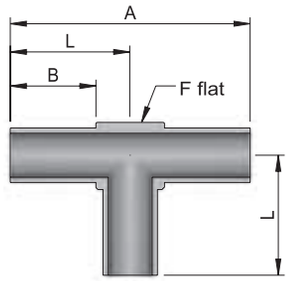

Basic Ordering Number	Tube O.D	Wall THK.	Dimensions, mm (inch)				Pressure Rating bar (psig)
			A	B	L	F	
C-LT-4	1/4"	1mm	50.0 (1.97)	19.1 (0.75)	25.0 (0.98)	11.1 (0.44)	351 (5100)
C-LT-4T35		0.035"					
C-LT-4-L10		1mm	31.8 (1.25)	10.0 (0.39)	15.9 (0.63)		
C-LT-6	3/8"	1mm	50.0 (1.97)	19.1 (0.75)	25.0 (0.98)	11.1 (0.44)	227 (3300)
C-LT-6T35		0.035"					
C-LT-6-L10		1mm	31.8 (1.25)	10.0 (0.39)	15.9 (0.63)		
C-LT-8	1/2"	0.049"	58.0 (2.28)	19.1 (0.75)	29.0 (1.14)	17.0 (0.67)	254 (3700)
C-LT-8-L10			39.8 (1.57)	10.0 (0.39)	19.9 (0.78)		
C-LT-12	3/4"	0.065"	67.0 (2.64)	22.5 (0.89)	33.5 (1.32)	25.0 (0.98)	165 (2400)
C-LT-12T49		0.049"					
C-LT-12-L10		0.065"	44.8 (1.76)	10.0 (0.39)	22.4 (0.88)		
C-LT-16	1"	0.065"	76.6 (3.02)	23.3 (0.92)	38.3 (1.51)	30.0 (1.18)	165 (2400)

Long Reducing Tee

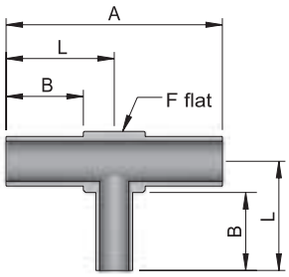

Basic Ordering Number	Tube O.D 1 x Wall THK.	Tube O.D 2 x Wall THK.	Dimensions, mm (inch)				Pressure Rating bar (psig)
			A	B	L	F	
C-LRT-6-4	3/8" x 1mm	1/4" x 1mm	50.0 (1.97)	19.1 (0.75)	25.0 (0.98)	11.1 (0.44)	227 (3300)
C-LRT-6-4-035	3/8" x 0.035"	1/4" x 0.035"					
C-LRT-6-4-L10	3/8" x 1mm	1/4" x 1mm	31.8 (1.25)	10.0 (0.39)	15.9 (0.63)		
C-LRT-8-4	1/2" x 0.049"	1/4" x 1mm	58.0 (2.28)	19.1 (0.75)	29.0 (1.14)	17.0 (0.67)	254 (3700)
C-LRT-8-4T35		1/4" x 0.035"					
C-LRT-8-4-L10		1/4" x 1mm	39.8 (1.57)	10.0 (0.39)	19.9 (0.78)		
C-LRT-8-6	1/2" x 0.049"	3/8" x 1mm	58.0 (2.28)	19.1 (0.75)	29.0 (1.14)	17.0 (0.67)	227 (3300)
C-LRT-8-6T35		3/8" x 0.035"					
C-LRT-8-6-L10		3/8" x 1mm	39.8 (1.57)	10.0 (0.39)	19.9 (0.78)		
C-LRT-12-4	3/4" x 0.065"	1/4" x 1mm	67 (2.64)	22.5 (0.89)	33.5 (1.32)	25.0 (0.98)	165 (2400)
C-LRT-12-4T35		1/4" x 0.035"					
C-LRT-12-4-L10		1/4" x 1mm	44.8 (1.76)	10.0 (0.39)	22.4 (0.88)		
C-LRT-12-6	3/4" x 0.065"	3/8" x 1mm	67 (2.64)	22.5 (0.89)	33.5 (1.32)	25.0 (0.98)	165 (2400)
C-LRT-12-6T35		3/8" x 0.035"					
C-LRT-12-6-L10		3/8" x 1mm	44.8 (1.76)	10.0 (0.39)	22.4 (0.88)		
C-LRT-12-8	3/4" x 0.065"	1/2" x 0.049"	67 (2.64)	22.5 (0.89)	33.5 (1.32)	25.0 (0.98)	165 (2400)
C-LRT-12-8-L10		1/2" x 0.049"	44.8 (1.76)	10.0 (0.39)	22.4 (0.88)		
C-LRT-16-4	1" x 0.065"	1/4" x 1mm	76.6 (3.02)	23.3 (0.92)	38.3 (1.51)	30.0 (1.18)	165 (2400)
C-LRT-16-4T35		1/4" x 0.035"					
C-LRT-16-8		1/2" x 0.049"					

Long Cross

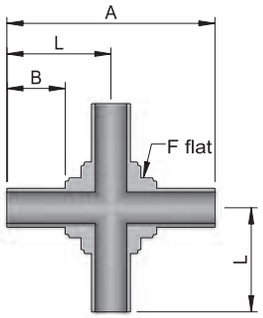

Basic Ordering Number	Tube O.D	Wall THK.	Dimensions, mm (inch)				Pressure Rating bar (psig)
			A	B	L	F	
C-LX-4	1/4"	1mm	50.0 (1.97)	19.1 (0.75)	25.0 (0.98)	11.1 (0.44)	351 (5100)
C-LX-4T35		0.035"					
C-LX-4-L10		1mm	31.8 (1.25)	10.0 (0.39)	15.9 (0.63)		
C-LX-6	3/8"	1mm	50.0 (1.97)	19.1 (0.75)	25.0 (0.98)	11.1 (0.44)	227 (3300)
C-LX-6T35		0.035"					
C-LX-6-L10		1mm	31.8 (1.25)	10.0 (0.39)	15.9 (0.63)		
C-LX-8	1/2"	0.049"	58.0 (2.28)	19.1 (0.75)	29.0 (1.14)	17.0 (0.67)	254 (3700)
C-LX-8-L10			39.8 (1.57)	10.0 (0.39)	19.9 (0.78)		
C-LX-12	3/4"	0.065"	67.0 (2.64)	22.5 (0.89)	33.5 (1.32)	25.0 (0.98)	165 (2400)
C-LX-12T49		0.049"					
C-LX-12-L10		0.065"	44.8 (1.76)	10.0 (0.39)	22.4 (0.88)		

Long Reducing Union

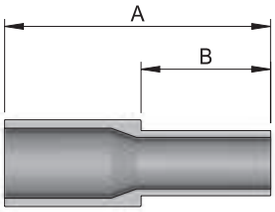

Basic Ordering Number	Tube O.D 1 x Wall THK.	Tube O.D 2 x Wall THK.	Dimensions, mm (inch)		Pressure Rating bar (psig)
			A	B	
C-LRU-6-4	3/8" x 1mm	1/4" x 1mm	38.1 (1.5)	19.1 (0.75)	227 (3300)
C-LRU-6-4-035	3/8" x 0.035"	1/4" x 0.035"			
C-LRU-6-4-L10	3/8" x 1mm	1/4" x 1mm	20.0 (0.79)	10.0 (0.39)	
C-LRU-8-4	1/2" x 0.049"	1/4" x 1mm	38.1 (1.5)	19.1 (0.75)	254 (3700)
C-LRU-8-4T35		1/4" x 0.035"			
C-LRU-8-4-L10		1/4" x 1mm	20.0 (0.79)	10.0 (0.39)	
C-LRU-8-6	1/2" x 0.049"	3/8" x 1mm	38.1 (1.5)	19.1 (0.75)	227 (3300)
C-LRU-8-6T35		3/8" x 0.035"			
C-LRU-8-6-L10		3/8" x 1mm	20.0 (0.79)	10.0 (0.39)	
C-LRU-12-4	3/4" x 0.065"	1/4" x 1mm	42.9 (1.69)	19.1 (0.75)	165 (2400)
C-LRU-12-4T35		1/4" x 0.035"			
C-LRU-12-4-L10		1/4" x 1mm	20.0 (0.79)	10.0 (0.39)	
C-LRU-12-6	3/4" x 0.065"	3/8" x 1mm	42.9 (1.69)	19.1 (0.75)	165 (2400)
C-LRU-12-6T35		3/8" x 0.035"			
C-LRU-12-6-L10		3/8" x 1mm	20.0 (0.79)	10.0 (0.39)	
C-LRU-12-8	3/4" x 0.065"	1/2" x 0.049"	42.9 (1.69)	19.1 (0.75)	165 (2400)
C-LRU-12-8-L10		1/2" x 0.049"	20.0 (0.79)	10.0 (0.39)	
C-LRU-16-4	1" x 0.065"	1/4" x 1mm	44.5 (1.75)	19.1 (0.75)	165 (2400)
C-LRU-16-4T35		1/4" x 0.035"			
C-LRU-16-6		3/8" x 1mm			
C-LRU-16-6T35		3/8" x 0.035"			
C-LRU-16-8		1/2" x 0.049"			
C-LRU-16-12		3/4" x 0.065"	48.5 (1.91)	23.3 (0.92)	

Metal Face Seal Fittings

Features

- High purity metal-to-metal seal
- Leak-tight from vacuum to positive pressure
- Minimization of clearance needed for removal and installation
- Two test ports are provided for easy leak test

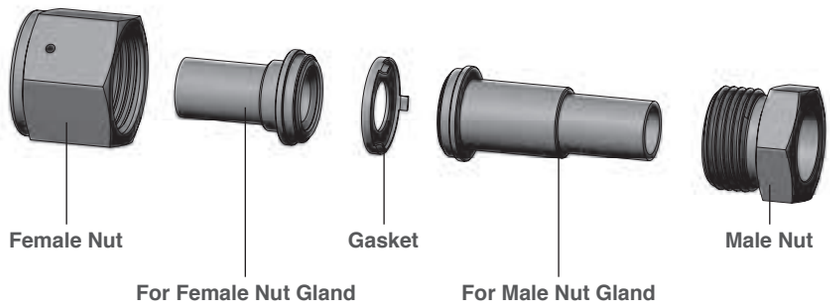

Testing

- Products are rated to a helium leak rate of 1 x 10^{-9} atm cc/sec.
- Tested in accordance with SEMI F1-96.

Plating

- Female nut threads are silver plated to prevent galling, ensure convenient assembly and consistent make-up.
- Chemical processes for cleaning, electro-polishing and passivation may remove plating.
- Damaged or removed plating may cause thread galling, damage of fitting components and preventing a proper seal.

Ordering Information

C	-	LGF	-	8	-	EP	-	S6LS
Clean Fitting		Product Type		Connection Size		Product Grade		Material

Clean Fitting	Product Type	Connection Size	Product Grade	Body Material
- **C** : S-LOK UHP Product	Refer to the basic ordering number in the dimension table.	- **4** : 1/4” - **6** : 3/8” - **8** : 1/2” - **12** : 3/4” - **16** : 1”	- **BA** : BA - **EP** : EP	- **S6LS** : SS316L Single Melt - **S6LV** : SS316L Double Melt

Micro Gland for Female Nut

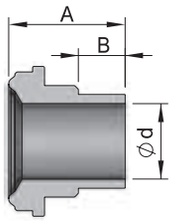

Basic Ordering Number	Head Size	Tube O.D x Wall THK.	Dimensions, mm (inch)			Pressure Rating bar (psig)	
			d	A	B	NI	SS316L
C-MGF-2	1/8”	1/8” x 0.028”	1.8 (0.07)	14.7 (0.58)	6.4 (0.25)	585 (8500)	585 (8500)
C-MGF-4	1/4"	1/4" x 1mm	4.35 (0.17)	15.2 (0.60)	6.4 (0.25)	351 (5100)	351 (5100)
C-MGF-4T35		1/4" x 0.035"	4.57 (0.18)				
C-MGF-6	1/2"	3/8" x 1mm	7.53 (0.30)	15.8 (0.62)	6.4 (0.25)	227 (3300)	227 (3300)
C-MGF-6T35		3/8" x 0.035"	7.75 (0.31)				
C-MGF-8	1/2"	1/2" x 0.049"	10.22 (0.40)	15.8 (0.62)	6.4 (0.25)	241 (3500)	241 (3500)
C-MGF-8-4		1/4" x 1mm	4.35 (0.17)				296 (4300)
C-MGF-8-4T35		1/4" x 0.035"	4.57 (0.18)				

Micro Gland for Male Nut

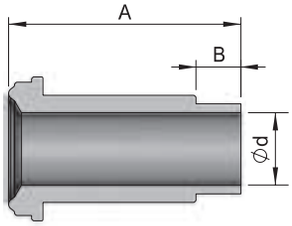

Basic Ordering Number	Head Size	Tube O.D x Wall THK.	Dimensions, mm (inch)			Pressure Rating bar (psig)	
			d	A	B	NI	SS316L
C-MGM-2	1/8”	1/8” x 0.028”	1.8 (0.07)	23.3 (0.92)	6.4 (0.25)	585 (8500)	585 (8500)
C-MGM-4	1/4"	1/4" x 1mm	4.35 (0.17)	30.5 (1.20)	6.4 (0.25)	351 (5100)	351 (5100)
C-MGM-4T35		1/4" x 0.035"	4.57 (0.18)				
C-MGM-6	1/2"	3/8" x 1mm	7.53 (0.30)	32.8 (1.29)	6.4 (0.25)	227 (3300)	227 (3300)
C-MGM-6T35		3/8" x 0.035"	7.75 (0.31)				
C-MGM-8	1/2"	1/2" x 0.049"	10.22 (0.40)	32.8 (1.29)	6.4 (0.25)	241 (3500)	241 (3500)
C-MGM-8-4		1/4" x 1mm	4.35 (0.17)			241 (3500)	296 (4300)
C-MGM-8-4T35		1/4" x 0.035"	4.57 (0.18)				

Long Gland for Female Nut

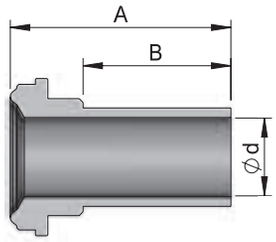

Basic Ordering Number	Head Size	Tube O.D x Wall THK.	Dimensions, mm (inch)			Pressure Rating bar (psig)	
			d	A	B	NI	SS316L
C-LGF-2	1/8”	1/8” x 0.028”	1.8 (0.07)	27.4 (1.08)	19.1 (0.75)	585 (8500)	585 (8500)
C-LGF-4	1/4"	1/4" x 1mm	4.35 (0.17)	28.0 (1.10)	19.1 (0.75)	351 (5100)	351 (5100)
C-LGF-4T35		1/4" x 0.035"	4.57 (0.18)				
C-LGF-4L10		1/4" x 1mm	4.35 (0.17)	18.9 (0.74)	10.0 (0.39)		
C-LGF-6	1/2"	3/8" x 1mm	7.53 (0.30)	28.5 (1.12)	19.1 (0.75)	227 (3300)	227 (3300)
C-LGF-6T35		3/8" x 0.035"	7.75 (0.31)				
C-LGF-6L10		3/8" x 1mm	7.53 (0.30)	19.4 (0.76)	10.0 (0.39)		
C-LGF-8	1/2"	1/2" x 0.049"	10.22 (0.40)	28.5 (1.12)	19.1 (0.75)	241 (3500)	241 (3500)
C-LGF-8L10				19.4 (0.76)	10.0 (0.39)		
C-LGF-8-4		1/4" x 1mm	4.35 (0.17)	28.5 (1.12)	19.1 (0.75)	241 (3500)	296 (4300)
C-LGF-12	3/4"	3/4" x 0.065"	15.75 (0.62)	34.5 (1.36)	19.1 (0.75)	165 (2400)	165 (2400)
C-LGF-16	1"	1" x 0.065"	22.10 (0.87)	38.6 (1.52)	19.1 (0.75)	165 (2400)	165 (2400)

Long Gland for Male Nut

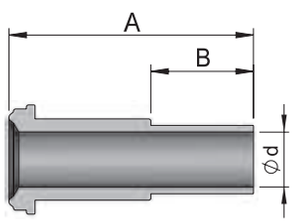

Basic Ordering Number	Head Size	Tube O.D x Wall THK.	Dimensions, mm (inch)			Pressure Rating bar (psig)	
			d	A	B	NI	SS316L
C-LGM-2	1/8”	1/8” x 0.028”	1.8 (0.07)	36 (1.42)	19.1 (0.75)	585 (8500)	585 (8500)
C-LGM-4	1/4"	1/4" x 1mm	4.35 (0.17)	43.2 (1.70)	19.1 (0.75)	351 (5100)	351 (5100)
C-LGM-4T35		1/4" x 0.035"	4.57 (0.18)				
C-LGM-4L10		1/4" x 1mm	4.35 (0.17)	34.1 (1.34)	10.0 (0.39)		
C-LGM-6	1/2"	3/8" x 1mm	7.53 (0.30)	45.5 (1.79)	19.1 (0.75)	227 (3300)	227 (3300)
C-LGM-6T35		3/8" x 0.035"	7.75 (0.31)				
C-LGM-6L10		3/8" x 1mm	7.53 (0.30)	36.4 (1.43)	10.0 (0.39)		
C-LGM-8	1/2"	1/2" x 0.049"	10.22 (0.40)	45.5 (1.79)	19.1 (0.75)	241 (3500)	241 (3500)
C-LGM-8L10				36.4 (1.43)	10.0 (0.39)		
C-LGM-8-4		1/4" x 1mm	4.35 (0.17)	45.5 (1.79)	19.1 (0.75)	241 (3500)	296 (4300)
C-LGM-12	3/4"	3/4" x 0.065"	15.75 (0.62)	51.6 (1.36)	19.1 (0.75)	165 (2400)	165 (2400)
C-LGM-16	1"	1" x 0.065"	22.10 (0.87)	58.9 (1.52)	19.1 (0.75)	165 (2400)	165 (2400)

ATW Long Gland for Female Nut

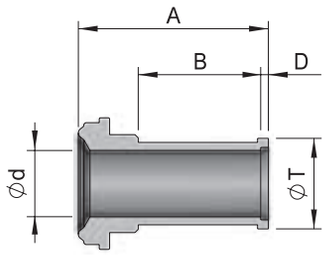

Basic Ordering Number	Head Size	Tube O.D	Dimensions, mm (inch)					Pressure Rating bar (psig)	
			d	T	A	B	D	NI	SS316L
C-ALGF-4	1/4"	1/4"	4.57 (0.18)	7.4 (0.29)	28.5 (1.12)	19.1 (0.75)	0.5 (0.02)	351 (5100)	351 (5100)
C-ALGF-6	1/2"	3/8"	7.75 (0.31)	10.4 (0.41)	29.2 (1.15)	19.1 (0.75)	0.8 (0.03)	227 (3300)	227 (3300)
C-ALGF-8	1/2"	1/2"	10.22 (0.40)	14.0 (0.55)	29.5 (1.16)	19.1 (0.75)	1.0 (0.04)	241 (3500)	241 (3500)

ATW Long Gland for Male Nut

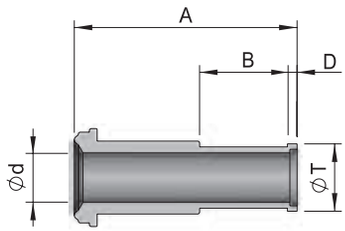

Basic Ordering Number	Head Size	Tube O.D	Dimensions, mm (inch)					Pressure Rating bar (psig)	
			d	T	A	B	D	NI	SS316L
C-ALGM-4	1/4"	1/4"	4.57 (0.18)	7.4 (0.29)	43.7 (1.72)	19.1 (0.75)	0.5 (0.02)	351 (5100)	351 (5100)
C-ALGM-6	1/2"	3/8"	7.75 (0.31)	10.4 (0.41)	46.2 (1.82)	19.1 (0.75)	0.8 (0.03)	227 (3300)	227 (3300)
C-ALGM-8	1/2"	1/2"	10.22 (0.40)	14.0 (0.55)	46.5 (1.83)	19.1 (0.75)	1.0 (0.04)	241 (3500)	241 (3500)
C-ALGM-8-4		1/4"	4.57 (0.18)	7.4 (0.29)	46.2 (1.82)	19.1 (0.75)	0.5 (0.02)		
C-ALGM-12	3/4"	3/4"	16.50 (0.65)	20.3 (0.80)	52.6 (2.07)	19.1 (0.75)	1.0 (0.04)	165 (2400)	165 (2400)
C-ALGM-16	1"	1"	22.10 (0.87)	26.9 (1.06)	65.3 (2.57)	24.4 (0.96)	1.0 (0.04)	165 (2400)	165 (2400)

Socket Weld Gland

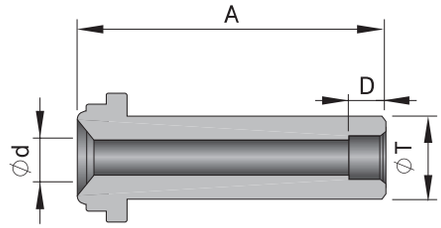

Basic Ordering Number	Head Size	Tube O.D	Dimensions, mm (inch)				Pressure Rating bar (psig)	
			d	T	A	D	NI	SS316L
C-GSW-4	1/4"	1/4"	4.57 (0.18)	8.9 (0.35)	33.3 (1.31)	7.1 (0.28)	378 (5500)	378 (5500)
C-GSW-4-12.7L					12.7 (0.50)			
C-GSW-4-19.1L					19.1 (0.75)			
C-GSW-6	1/2"	3/8"	7.11 (0.28)	15.2 (0.60)	38.1 (1.50)	7.9 (0.31)	241 (3500)	296 (4300)
C-GSW-8	1/2"	1/2"	10.22 (0.40)	15.2 (0.60)	38.1 (1.50)	9.6 (0.38)	206 (3000)	206 (3000)
C-GSW-8-4	1/2"	1/4"	4.57 (0.18)	15.2 (0.60)	38.1 (1.50)	7.1 (0.28)	241 (3500)	241 (3500)
C-GSW-12	3/4"	3/4"	15.74 (0.62)	22.4 (0.88)	50.8 (2.00)	11.2 (0.44)	192 (2800)	192 (2800)
C-GSW-16	1"	1"	22.10 (0.87)	30.2 (1.19)	56.4 (2.22)	15.7 (0.62)	165 (2400)	206 (3000)

Male Weld Gland

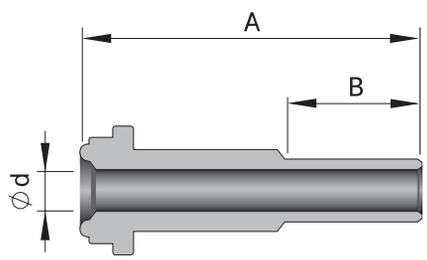

Basic Ordering Number	Head Size	Tube O.D	Dimensions, mm (inch)			Pressure Rating bar (psig)	
			d	A	B	NI	SS316L
C-GMW-4	1/4"	1/4"	3.00 (0.12)	33.3 (1.31)	10.4 (0.41)	551 (8000)	689 (10000)
C-GMW-6	1/2"	3/8"	7.11 (0.28)	38.1 (1.50)	10.4 (0.41)	241 (3500)	296 (4300)
C-GMW-8	1/2"	1/2"	10.22 (0.40)	38.1 (1.50)	12.7 (0.50)	241 (3500)	241 (3500)
C-GMW-8-4	1/2"	1/4"	3.00 (0.12)	38.1 (1.50)	10.4 (0.41)	241 (3500)	296 (4300)
C-GMW-12	3/4"	3/4"	13.50 (0.53)	50.8 (2.00)	15.7 (0.62)	206 (3000)	254 (3700)
C-GMW-16	1"	1"	19.1 (0.75)	56.4 (2.22)	20.6 (0.81)	165 (2400)	206 (3000)

Tube Adapter Gland

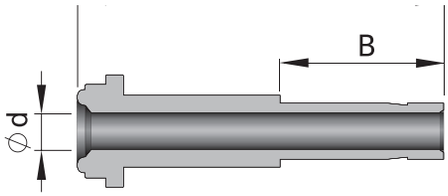

Basic Ordering Number	Head Size	Tube O.D	Dimensions, mm (inch)			Pressure Rating bar (psig)	
			d	A	B	NI	SS316L
C-GA-4	1/4"	1/4"	4.3 (0.17)	41.0 (1.62)	16.2 (0.64)	551 (8000)	689 (10000)
C-GA-6	1/2"	3/8"	6.8 (0.27)	46.0 (1.81)	17.8 (0.70)	241 (3500)	296 (4300)
C-GA-8	1/2"	1/2"	9.4 (0.37)	49.3 (1.94)	24.4 (0.96)	241 (3500)	296 (4300)

Blind Gland

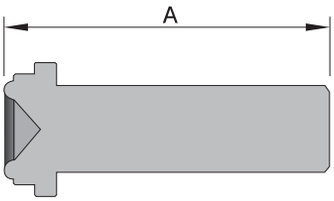

Basic Ordering Number	Head Size	Dimensions, mm (inch)
		A
C-GBL-4	1/4"	33.3 (1.31)
C-GBL-8	1/2"	38.1 (1.50)
C-GBL-12	3/4"	50.8 (2.00)
C-GBL-16	1"	56.4 (2.22)

Union

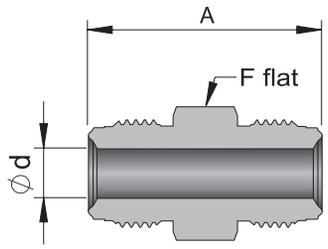

Basic Ordering Number	Head Size	Dimensions, mm (inch)			Pressure Rating bar (psig)	
		d	A	F	NI	SS316L
C-U-4	1/4"	4.3 (0.17)	39.4 (1.55)	15.88 (5/8)	551 (8000)	689 (10000)
C-U-8	1/2"	10.2 (0.40)	46.7 (1.84)	23.81 (15/16)	241 (3500)	296 (4300)
C-U-8-4	1/2" x 1/4"	10.2 x 4.3 (0.40 x 0.17)	43.4 (1.71)	23.81 (15/16)	241 (3500)	296 (4300)
C-U-12	3/4"	15.7 (0.62)	62.0 (2.44)	33.33 (1-5/16)	206 (3000)	254 (3700)
C-U-16	1"	22.1 (0.87)	65.8 (2.59)	41.28 (1-5/8)	165 (2400)	206 (3000)

Bulkhead Union

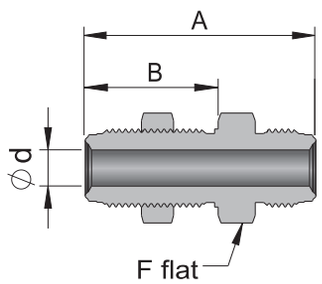

Basic Ordering Number	Head Size	Dimensions, mm (inch)				Pressure Rating bar (psig)	
		d	A	B	F	NI	SS316L
C-BU-4	1/4"	4.3 (0.17)	56.6 (2.23)	33.0 (1.30)	19.05 (3/4)	551 (8000)	689 (10000)
C-BU-8	1/2"	10.2 (0.40)	65.3 (2.57)	37.6 (1.48)	26.98 (1-1/16)	241 (3500)	296 (4300)
C-BU-12	3/4"	15.7 (0.62)	79.0 (3.11)	43.0 (1.69)	38.10 (1-1/2)	206 (3000)	254 (3700)
C-BU-16	1"	22.1 (0.87)	86.0 (3.39)	47.0 (1.85)	44.45 (1-3/4)	165 (2400)	206 (3000)

Male Connector

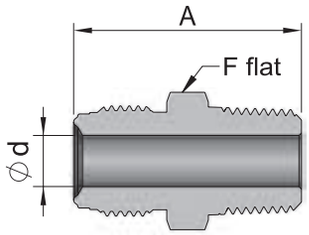

Basic Ordering Number	Head Size	NPT Size	Dimensions, mm (inch)			Pressure Rating bar (psig)	
			d	A	F	NI	SS316L
C-MC-4-2N	1/4"	1/8"	4.3 (0.17)	33.3 (1.31)	15.88 (5/8)	551 (8000)	689 (10000)
C-MC-4-4N		1/4"		37.8 (1.49)			
C-MC-8-4N	1/2"	1/4"	7.1 (0.28)	41.9 (1.65)	23.81 (15/16)	241 (3500)	296 (4300)
C-MC-8-6N		3/8"	9.6 (0.38)	41.9 (1.65)			
C-MC-8-8N		1/2"	10.2 (0.40)	46.7 (1.84)			
C-MC-12-12N	3/4"	3/4"	15.7 (0.62)	55.6 (2.19)	33.33 (1-5/16)	206 (3000)	254 (3700)
C-MC-16-16N	1"	1"	22.1 (0.87)	62.7 (2.47)	41.28 (1-5/8)	165 (2400)	206 (3000)

Tube Butt Weld Connector

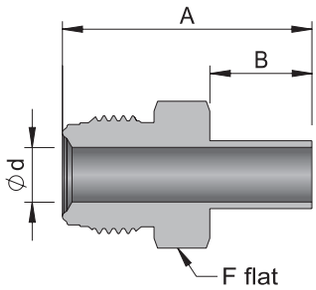

Basic Ordering Number	Head Size	Tube O.D x Wall THK.	Dimensions, mm (inch)				Pressure Rating bar (psig)	
			d	A	B	F	NI	SS316L
C-TC-4-4	1/4"	1/4" x 1mm	4.35 (0.17)	42.7 (1.68)	19.1 (0.75)	15.88 (5/8)	351 (5100)	351 (5100)
C-TC-4-4T35		1/4" x 0.035"	4.57 (0.18)					
C-TC-8-6	1/2"	3/8" x 1mm	7.53 (0.30)	46.7 (1.84)	19.1 (0.75)	23.81 (15/16)	227 (3300)	227 (3300)
C-TC-8-6T35		3/8" x 0.035"	7.75 (0.31)					
C-TC-8-8	1/2"	1/2" x 0.049"	10.22 (0.40)	46.7 (1.84)	19.1 (0.75)	23.81 (15/16)	241 (3500)	241 (3500)
C-TC-12-12	3/4"	3/4" x 0.065"	15.75 (0.62)	55.6 (2.19)	19.1 (0.75)	33.33 (1-5/16)	165 (2400)	165 (2400)

Tube Butt Weld Bulkhead Connector

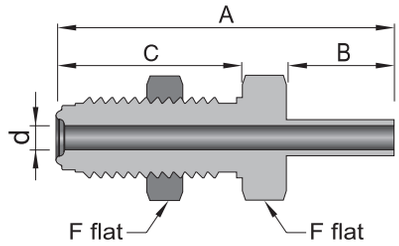

Basic Ordering Number	Head Size	Dimensions, mm (inch)					Pressure Rating bar (psig)	
		d	A	B	C	F	NI	SS316L
C-TCB-4-4	1/4"	4.35 (0.17)	59.9 (2.36)	19.1 (0.75)	33.0 (1.30)	19.05 (3/4)	351 (5100)	351 (5100)
C-TCB-4-4T35		4.57 (0.18)						
C-TCB-8-8	1/2"	10.22 (0.40)	65.3 (2.57)	19.1 (0.75)	37.6 (1.48)	26.99 (1-1/16)	241 (3500)	241 (3500)
C-TCB-12-12	3/4"	15.75 (0.62)	71.3 (2.81)	19.1 (0.75)	43.0 (1.69)	38.1 (1-1/2)	165 (2400)	165 (2400)

Coupling

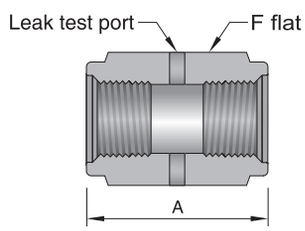

Basic Ordering Number	Head Size	Dimensions, mm (inch)	
		A	F
C-CG-2	1/8"	16.8 (0.66)	11.11 (7/16)
C-CG-4	1/4"	30.2 (1.19)	19.05 (3/4)
C-CG-8	1/2"	33.3 (1.31)	26.98 (1-1/16)
C-CG-12	3/4"	42.7 (1.68)	38.1 (1-1/2)
C-CG-16	1"	51.8 (2.04)	44.45 (1-3/4)

Union Elbow

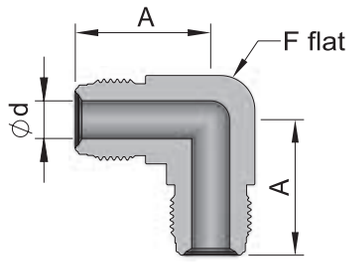

Basic Ordering Number	Head Size	Dimensions, mm (inch)			Pressure Rating bar (psig)	
		d	A	F	NI	SS316L
C-L-4	1/4"	4.3 (0.17)	27.2 (1.07)	12.7 (1/2)	551 (8000)	689 (10000)
C-L-8	1/2"	10.2 (0.40)	36.8 (1.45)	20.6 (13/16)	241 (3500)	296 (4300)
C-L-12	3/4"	15.7 (0.62)	48.8 (1.92)	31.8 (1-1/4)	206 (3000)	254 (3700)
C-L-16	1"	22.1 (0.87)	50.8 (2.00)	42.8 (1-11/16)	165 (2400)	206 (3000)

Male Elbow

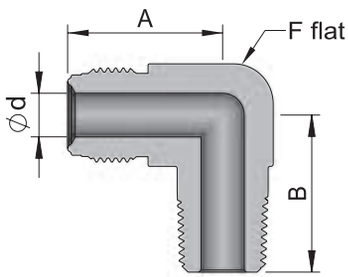

Basic Ordering Number	Head Size	NPT Size	Dimensions, mm (inch)				Pressure Rating bar (psig)	
			d	A	B	F	NI	SS316L
C-MLC-4-2N	1/4"	1/8"	4.3 (0.17)	27.2 (1.07)	22.1 (0.87)	12.7 (1/2)	551 (8000)	689 (10000)
C-MLC-4-4N		1/4"			26.7 (1.05)			
C-MLC-8-6N	1/2"	3/8"	10.2 (0.40)	36.8 (1.45)	32.0 (1.26)	20.6 (13/16)	241 (3500)	296 (4300)
C-MLC-8-8N		1/2"			36.8 (1.45)			

Union Tee

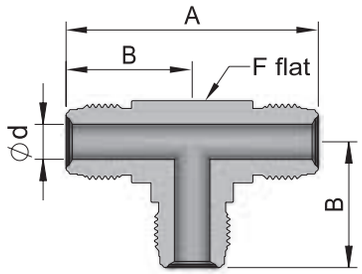

Basic Ordering Number	Head Size	Dimensions, mm (inch)				Pressure Rating bar (psig)	
		d	A	B	F	NI	SS316L
C-T-4	1/4"	4.3 (0.17)	54.4 (2.14)	27.2 (1.07)	12.7 (1/2)	551 (8000)	689 (10000)
C-T-8	1/2"	10.2 (0.40)	73.6 (2.90)	36.8 (1.45)	20.6 (13/16)	241 (3500)	296 (4300)
C-T-12	3/4"	15.7 (0.62)	97.6 (3.84)	48.8 (1.92)	31.8 (1-1/4)	206 (3000)	254 (3700)
C-T-16	1"	22.1 (0.87)	101.6 (4.00)	50.8 (2.00)	42.8 (1-11/16)	165 (2400w)	206 (3000)

Union Cross

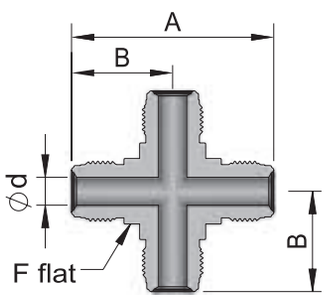

Basic Ordering Number	Head Size	Dimensions, mm (inch)				Pressure Rating bar (psig)	
		d	A	B	F	NI	SS316L
C-X-4	1/4"	4.3 (0.17)	54.4 (2.14)	27.2 (1.07)	12.7 (1/2)	551 (8000)	689 (10000)
C-X-8	1/2"	10.2 (0.40)	73.6 (2.90)	36.8 (1.45)	20.6 (13/16)	241 (3500)	296 (4300)
C-X-12	3/4"	15.7 (0.62)	97.6 (3.84)	48.8 (1.92)	31.8 (1-1/4)	206 (3000)	254 (3700)
C-X-16	1"	22.1 (0.87)	101.6 (4.00)	50.8 (2.00)	42.8 (1-11/16)	165 (2400)	206 (3000)

S-LOK Tube Fitting Connector

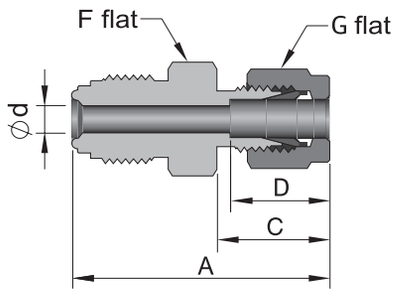

Basic Ordering Number	Head Size	Tube O.D	Dimensions, mm (inch)						Pressure Rating bar (psig)	
			d	A	C	D	F	G	NI	SS316L
C-US-4-4T	1/4"	1/4"	4.3 (0.17)	41.1 (1.62)	17.8 (0.70)	15.2 (0.60)	15.88 (5/8)	14.28 (9/16)	551 (8000)	689 (10000)
C-US-8-6T	1/2"	3/8"	7.1 (0.28)	46.7 (1.84)	19.3 (0.76)	16.8 (0.66)	23.81 (15/16)	17.46 (11/16)	241 (3500)	296 (4300)
C-US-8-8T	1/2"	1/2"	10.2 (0.40)	49.5 (1.95)	21.8 (0.86)	22.9 (0.90)	23.81 (15/16)	22.22 (7/8)	241 (3500)	296 (4300)

S-LOK Tube Fitting Bulkhead Connector

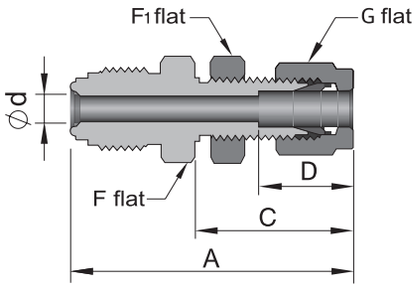

Basic Ordering Number	Head Size	Tube O.D	Dimensions, mm (inch)									Pressure Rating bar (psig)	
			d	A	C	D	F	F1	G	Panle Drill Size	Max. Panel Thk.	NI	SS316L
C-USB-4-4T	1/4"	1/4"	4.3 (0.17)	57.2 (2.25)	33.5 (1.32)	15.2 (0.60)	15.88 (5/8)	15.88 (5/8)	14.28 (9/16)	11.9 (15/32)	10.2 (0.40)	551 (8000)	689 (10000)
C-USB-8-6T	1/2"	3/8"	7.1 (0.28)	64.5 (2.54)	36.8 (1.45)	16.8 (0.66)	23.81 (15/16)	19.05 (3/4)	17.46 (11/16)	15.0 (19/32)	11.2 (0.44)	241 (3500)	296 (4300)
C-USB-8-8T	1/2"	1/2"	10.2 (0.40)	69.6 (2.74)	41.9 (1.65)	22.9 (0.90)	23.81 (15/16)	23.81 (15/16)	22.22 (7/8)	19.8 (25/32)	12.7 (0.50)	241 (3500)	296 (4300)

Male Bulkhead Connector

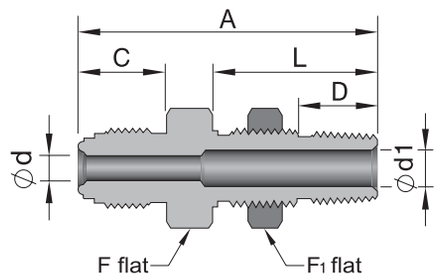

Basic Ordering Number	Head Size	NPT Size	Dimensions, mm (inch)										Pressure Rating bar (psig)	
			d	d1	A	C	D	F	F1	L	Panle Drill Size	Max. Panel Thk.	NI	SS316L
C-MBC-4-4N	1/4"	1/4"	4.3 (0.17)	7.1 (0.28)	56.1 (2.21)	15.7 (0.62)	14.2 (0.56)	20.63 (13/16)	20.63 (13/16)	31.5 (1.24)	16.8 (21/32)	9.7 (0.38)	551 (8000)	551 (8000)
C-MBC-8-4N	1/2"	1/4"	10.2 (0.40)	7.1 (0.28)	59.4 (2.34)	19.1 (0.75)	14.2 (0.56)	23.81 (15/16)	20.63 (13/16)	31.5 (1.24)	16.8 (21/32)	9.7 (0.38)	241 (3500)	301 (4370)

Male Connector (Straight Thread)

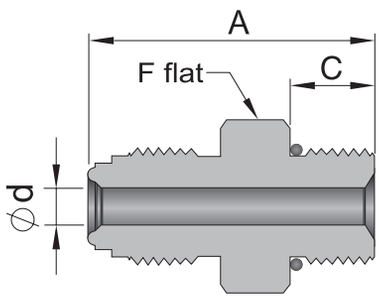

Basic Ordering Number	Head Size	Straight Thread Size	Dimensions, mm (inch)				Pressure Rating bar (psig)	
			d	A	C	F	NI	SS316L
C-MC-4-6U	1/4"	9/16-18	4.3 (0.17)	33.8 (1.33)	9.9 (0.39)	19.1 (3/4)	310 (4500)	310 (4500)
C-MC-8-6U	1/2"	9/16-18	7.1 (0.28)	37.6 (1.48)	9.9 (0.39)	23.8 (15/16)	241 (3500)	241 (3500)
C-MC-8-10U	1/2"	7/8-14	10.2 (0.40)	42.2 (1.66)	12.7 (0.50)	25.4 (1)	241 (3500)	241 (3500)

Female Connector

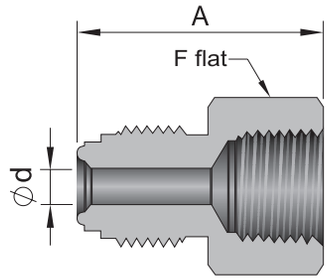

Basic Ordering Number	Head Size	NPT Size	Dimensions, mm (inch)			Pressure Rating bar (psig)	
			d	A	F	NI	SS316L
C-FC-4-2N	1/4"	1/8"	4.3 (0.17)	35.8 (1.41)	15.88 (5/8)	551 (8000)	551 (8000)
C-FC-4-4N		1/4"		39.1 (1.54)	19.05 (3/4)	454 (6600)	454 (6600)
C-FC-8-6N	1/2"	3/8"	10.2 (0.40)	44.7 (1.76)	23.81 (15/16)	241 (3500)	296 (4300)
C-FC-8-8N		1/2"		50.5 (1.99)	26.98 (1-1/16)		
C-FC-12-12N	3/4"	3/4"	15.7 (0.62)	59.9 (2.36)	33.33 (1-5/16)	206 (3000)	254 (3700)
C-FC-16-16N	1"	1"	22.1 (0.87)	63.8 (2.51)	41.28 (1-5/8)	165 (2400)	206 (3000)

Gasket Retainer Assembly

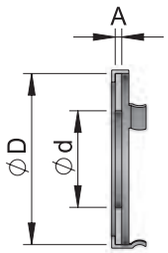

Basic Ordering Number	Head Size (ØD)	Dimensions, mm (inch)		
		d	D	A
C-GTR-4	1/4"	5.6 (0.22)	11.9 (0.47)	0.8 (0.03)
C-GTR-8	1/2"	11.2 (0.44)	19.2 (0.76)	0.8 (0.03)
C-GTR-12	3/4"	16.8 (0.66)	28.5 (1.12)	0.8 (0.03)
C-GTR-16	1"	22.6 (0.89)	35.1 (1.38)	0.8 (0.03)

• **Basic ordering number of gasket retainer assembly is "C-GTR".**

Gasket

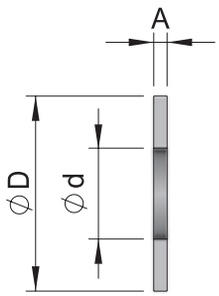

Basic Ordering Number	Head Size	Dimensions, mm (inch)		
		d	D	A
C-GT-2	1/8"	2.3 (0.09)	6.6 (0.26)	0.8 (0.03)
C-GT-4	1/4"	5.6 (0.22)	12.5 (0.49)	0.8 (0.03)
C-GT-8	1/2"	11.2 (0.44)	19.8 (0.78)	0.8 (0.03)
C-GT-12	3/4"	16.8 (0.66)	29.0 (1.14)	0.8 (0.03)
C-GT-16	1"	22.6 (0.89)	35.6 (1.40)	0.8 (0.03)

Female Nut

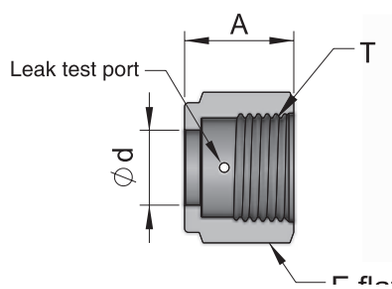

Basic Ordering Number	Head Size	Dimensions, mm (inch)			Thread T
		d	A	F	
C-NF-2	1/8”	5.3 (0.21)	13.5 (0.53)	11.11 (7/16)	5/16-24UNF
C-NF-4	1/4"	9.1 (0.36)	20.6 (0.81)	19.05 (3/4)	9/16-18UNF
C-NF-8	1/2"	15.5 (0.61)	22.4 (0.88)	26.98 (1-1/16)	7/8-14UNF
C-NF-12	3/4"	22.6 (0.89)	28.4 (1.12)	38.10 (1-1/2)	1-1/4-18UNEF
C-NF-16	1"	30.5 (1.20)	34.0 (1.34)	44.45 (1-3/4)	1-1/2-20UN

Male Nut

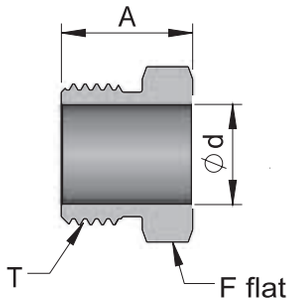

Basic Ordering Number	Head Size	Dimensions, mm (inch)			Thread T
		d	A	F	
C-NM-2	1/8”	5.3 (0.21)	12.7 (0.5)	9.52 (3/8)	5/16-24UNF
C-NM-4	1/4"	9.1 (0.36)	18.0 (0.71)	15.88 (5/8)	9/16-18UNF
C-NM-4A					
C-NM-4-54			13.7 (0.54)		
C-NM-4-65			16.5 (0.65)		
C-NM-8	1/2"	15.5 (0.61)	20.6 (0.81)	23.81 (15/16)	7/8-14UNF
C-NM-12	3/4"	22.6 (0.89)	25.4 (1.00)	33.33 (1-5/16)	1-1/4-18UNEF
C-NM-16	1"	30.5 (1.20)	30.2 (1.19)	41.28 (1-5/8)	1-1/2-20UN

• **C-NM-4A has a taper at hex end, allowing the nut to move around 90° tube bends.**

Cap

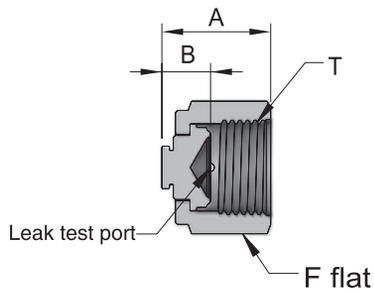

Basic Ordering Number	Head Size	Dimensions, mm (inch)			Thread T
		A	B	F	
C-CP-4	1/4"	23.9 (0.94)	11.2 (0.44)	19.05 (3/4)	9/16-18UNF
C-CP-8	1/2"	25.6 (1.01)	11.4 (0.45)	26.98 (1-1/16)	7/8-14UNF
C-CP-12	3/4"	32.8 (1.29)	13.7 (0.54)	38.10 (1-1/2)	1-1/4-18UNEF
C-CP-16	1"	39.1 (1.54)	16.0 (0.63)	44.45 (1-3/4)	1-1/2-20UN

Plug

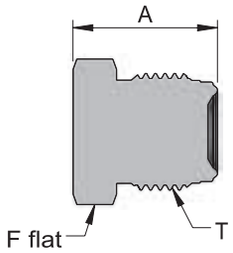

Basic Ordering Number	Head Size	Dimensions, mm (inch)		Thread T
		A	F	
C-PG-4	1/4"	23.4 (0.94)	15.88 (5/8)	9/16-18UNF
C-PG-8	1/2"	27.4 (1.01)	23.81 (15/16)	7/8-14UNF
C-PG-12	3/4"	36.3 (1.29)	33.33 (1-5/16)	1-1/4-18UNEF
C-PG-16	1"	38.6 (1.54)	41.28 (1-5/8)	1-1/2-20UN

High Flow Gland

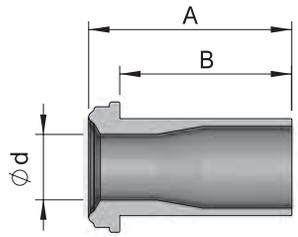

Basic Ordering Number	Head Size	Tube O.D x Wall THK.	Dimensions, mm (inch)			Pressure Rating bar (psig)	
			d	A	B	NI	SS316L
C-HG-4-6	1/4"	3/8" x 1mm	6.4 (0.25)	33.2 (1.31)	28.4 (1.12)	V227 (3300)	V227 (3300)
C-HG-4-6T35		3/8" x 0.035"					

High Flow Female Nut

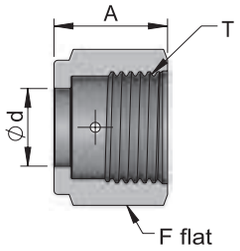

Basic Ordering Number	Head Size	Dimensions, mm (inch)			Thread T
		d	A	F	
C-HNF-4	1/4"	9.90 (0.39)	20.75 (0.82)	19.05 (3/4)	9/16-18UNF

High Flow Male Nut

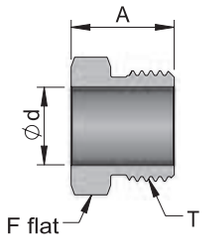

Basic Ordering Number	Head Size	Dimensions, mm (inch)			Thread T
		d	A	F	
C-HNM-4	1/4"	9.90 (0.39)	18.30 (0.72)	15.88 (5/8)	9/16-18UNF

Welded Male Connector

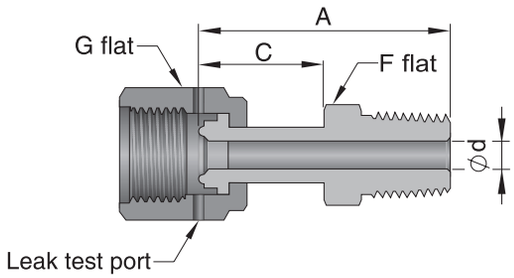

Basic Ordering Number	Head Size	NPT Size	Dimensions, mm (inch)				
			d	A	C	F	G
C-WMC-4-4N	1/4"	1/4"	4.3 (0.17)	45.5 (1.79)	23.4 (0.92)	14.28 (9/16)	19.05 (3/4)
C-WMC-8-6N	1/2"	3/8"	10.2 (0.40)	48.0 (1.89)	25.4 (1.00)	17.46 (11/16)	26.98 (1-1/16)
C-WMC-8-8N	1/2"	1/2"	10.2 (0.40)	53.1 (2.09)	25.6 (1.01)	22.22 (7/8)	26.98 (1-1/16)

Welded Female Connector

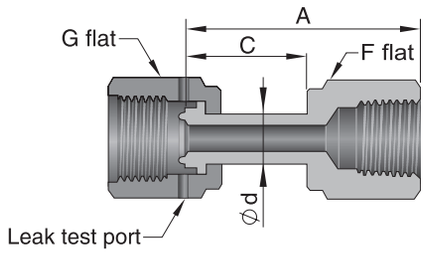

Basic Ordering Number	Head Size	NPT Size	Dimensions, mm (inch)				
			d	A	C	F	G
C-WFC-4-4N	1/4"	1/4"	4.3 (0.17)	45.0 (1.77)	23.4 (0.92)	19.05 (3/4)	19.05 (3/4)
C-WFC-8-6N	1/2"	3/8"	10.2 (0.40)	49.5 (1.95)	26.9 (1.06)	22.22 (7/8)	26.98 (1-1/16)
C-WFC-8-8N	1/2"	1/2"	10.2 (0.40)	55.4 (2.18)	26.4 (1.04)	26.98 (1-1/16)	26.98 (1-1/16)

Welded S-LOK Tube Fitting Connector

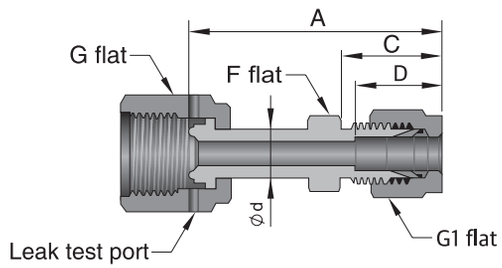

Basic Ordering Number	Head Size	Tube Size	Dimensions, mm (inch)						
			d	A	C	D	F	G	G1
C-WUS-4-4T	1/4"	1/4"	4.3 (0.17)	49.3 (1.94)	17.8 (0.70)	15.2 (0.60)	12.7 (1/2)	19.05 (3/4)	14.28 (9/16)
C-WUS-4-6T	1/4"	3/8"	4.3 (0.17)	50.0 (1.97)	19.3 (0.76)	16.8 (0.66)	15.88 (5/8)	19.05 (3/4)	17.46 (11/16)
C-WUS-8-8T	1/2"	1/2"	10.2 (0.40)	56.6 (2.23)	21.8 (0.86)	22.9 (0.90)	20.63 (13/16)	26.98 (1-1/16)	22.22 (7/8)

Close Coupling

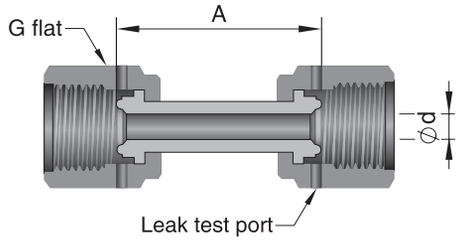

Basic Ordering Number	Head Size	Dimensions, mm (inch)		
		d	A	G
C-CC-4	1/4"	4.3 (0.17)	43.4 (1.71)	19.05 (3/4)
C-CC-8	1/2"	10.2 (0.40)	46.7 (1.84)	26.98 (1-1/16)

Welded Elbow Female Union

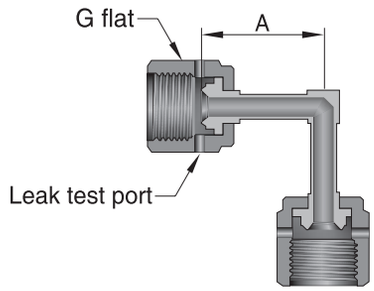

Basic Ordering Number	Head Size	Dimensions, mm (inch)	
		A	G
C-WL-FF-4	1/4"	38.3 (1.51v)	19.05 (3/4)
C-WL-FF-4L25	1/4"	25.4 (1.00)	19.05 (3/4)

Welded Tee Female Union

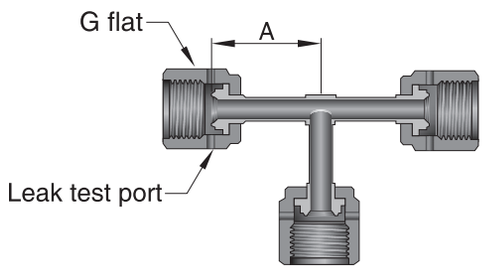

Basic Ordering Number	Head Size	Dimensions, mm (inch)	
		A	G
C-WT-FFF-4	1/4"	38.3 (1.51)	19.05 (3/4)
C-WT-FFF-4L25	1/4"	25.4 (1.00)	19.05 (3/4)

S-LOK®

Instrument Thread & Weld Fittings

The best partner for value creation
We support the innovations of customer

07

Catalogue No. S-LOK Mar.2024

Features

- All instrument thread fittings are designed in accordance with ASME B31.3 for instrument and process.
- Male thread are protected with cap.
- Burr-free internal and outside surfaces.
- NPT threads are based on requirement of ASME B1.20.1

Material Standards & Temperature Ratings

Material	Bar Stock	Forgings	Temperature
SS316	ASTM A479, ASTM A276	ASTM A182	-325˚F to 1200˚F (-198˚C to 648˚C)
Brass	ASTM B16, ASTM B453	ASTM B283	-325˚F to 400˚F (-198˚C to 204˚C)
Carbon steel	ASTM A108, JIS G4051	JIS G4051	-20˚F to 350˚F (-29˚C to 176˚C)

Pressure Ratings

Size Designator	NPT Size	316 Stainless Steel				Brass				Carbon steel			
		Male		Female		Male		Female		Male		Female	
		psig	bar	psig	bar	psig	bar	psig	bar	psig	bar	psig	bar
1	1/16	11,000	758	6,700	462	5,500	379	3,300	227	11,000	758	6,700	462
2	1/8	10,000	689	6,500	448	5,000	345	3,200	221	10,000	689	6,500	448
4	1/4	8,000	551	6,600	455	4,000	276	3,300	227	8,000	551	6,600	455
6	3/8	7,800	538	5,300	365	3,900	269	2,600	179	7,800	538	5,300	365
8	1/2	7,700	531	4,900	338	3,800	262	2,400	165	7,700	531	4,900	338
12	3/4	7,300	503	4.600	317	3,600	248	2,300	159	7,300	503	4,600	317
16	1	5,300	365	4,400	303	2,600	179	2,200	152	5,300	365	4,400	303
20	1-1/4	6,000	414	5,000	345	3,000	207	2,500	172	6,000	414	5,000	345
24	1-1/2	5,000	345	4,600	317	2,500	172	2,300	159	5,000	344	4,600	317
32	2	3,900	269	3,900	269	1,900	131	1,900	131	3,900	269	3,900	269

- Pressure ratings listed are for temperature up to 37.8C (100 ˚F).
- Based on Pressure Pipe Code ASME B31.3 pressure rating is calculated with an allowable stress value of 20,000psi for SS316, 10,000psi for Bass 20,000psi for Carbon Steel.
- To determine the working pressure in accordance with Power Pipe Code ASME B31.1, multiply psig by 0.94. Brass pressure ratings remain the same.
- Due to larger outer diameter of female threads rating of female are lower than male threads.
- To determine kPa rating, multiply psig by 6.89.
- Reducing Hex Bushing (P-SHB) pressure rating is not covered in this table. See the pressure rating in the dimensional data chart.

Ordering Information

Material	S.Steel 316	S.Steel 316L	Carbon Steel	Brass
Identifier	S6	S6L	CS	BS

- Example : P - SHN - 8N - S6

Pipe fitting
Name of fitting
Pipe thread Size
Material

Pipe Thread Symbol & Designator

Pipe Size	Designator	NPT	Tapered (PT)	Parallel (PF)
			ISO 7/1, JIS B0203	ISO 228/1, JIS B0202
1/8	2	2N	2R	2G
1/4	4	4N	4R	4G
3/8	6	6N	6R	6G
1/2	8	8N	8R	8G
3/4	12	12N	12R	12G
1	16	16N	16R	16G

Close Nipple
(Male NPT both ends)

P-SCN

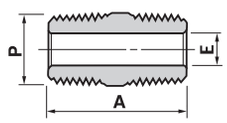

Part Number	P NPT Size	A	E
P-SCN-2N	1/8	19.05	4.8
P-SCN-4N	1/4	28.4	7.1
P-SCN-6N	3/8	28.4	9.6
P-SCN-8N	1/2	31.7	11.9
P-SCN-12N	3/4	31.7	15.7
P-SCN-16N	1	47.8	22.4

Hex Nipple
(Male NPT both ends)

P-SHN

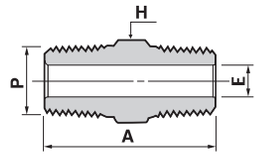

Part Number	P NPT Size	A	E	H Hex
P-SHN-2N	1/8	25.4	4.8	11.1
P-SHN-4N	1/4	35.3	7.1	14.2
P-SHN-6N	3/8	36.1	9.6	17.4
P-SHN-8N	1/2	46.7	11.9	22.2
P-SHN-12N	3/4	46.7	15.7	26.9
P-SHN-16N	1	58.7	22.4	34.9
10,000psig				
P-SHN-4N-10K	1/4	35.6	5.8	14.2
P-SHN-8N-10K	1/2	46.7	9.9	22.2

Hex Reducing Nipple
(Male NPT to reduced male NPT)

P-SHRN

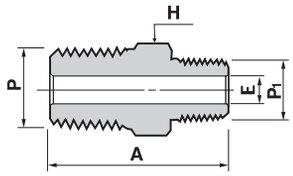

Part Number	P NPT Size	P_1 Reduced NPT Size	A	E	H Hex
P-SHRN-4-2N	1/4	1/8	30.7	4.8	14.2
P-SHRN-6-2N	3/8	1/8	32.0	4.8	17.4
P-SHRN-6-4N	3/8	1/4	36.1	7.1	17.4
P-SHRN-8-2N	1/2	1/8	37.2	4.8	22.2
P-SHRN-8-4N	1/2	1/4	41.7	7.1	22.2
P-SHRN-8-6N	1/2	3/8	41.7	9.6	22.2
P-SHRN-12-4N	3/4	1/4	41.7	7.1	26.9
P-SHRN-12-8N	3/4	1/2	46.7	11.9	26.9
P-SHRN-16-4N	1	1/4	49.3	7.1	34.9
P-SHRN-16-8N	1	1/2	54.1	11.9	34.9
10,000psig					
P-SHRN-8-4N-10K	1/2	1/4	41.9	5.8	22.2

Hex Nipple
(Male NPT to ISO tapered)

P-SHN

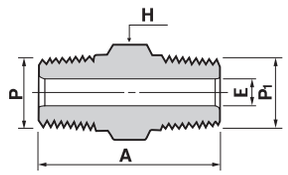

Part Number	P NPT Size	P_1 PT Size	A	E	H Hex
P-SHN-2NR	1/8	1/8	24.6	4.8	11.1
P-SHN-4NR	1/4	1/4	35.3	7.1	14.2
P-SHN-6NR	3/8	3/8	36.1	9.6	17.4
P-SHN-8NR	1/2	1/2	46.7	11.9	22.2
P-SHN-12NR	3/4	3/4	46.7	15.7	26.9
P-SHN-16NR	1	1	58.7	22.4	34.9

Hex Nipple
(Male NPT to male parallel)

P-SHN

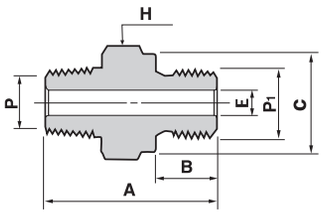

Part Number	P NPT Size	P_1 PF Size	A	B	C	E	H Hex
P-SHN-2NG	1/8	1/8	27.4	7.1	13.7	4.1	14.2
P-SHN-4NG	1/4	1/4	36.8	11.2	17.8	5.8	19.05
P-SHN-6NG	3/8	3/8	37.6	11.2	21.8	7.9	22.2
P-SHN-8NG	1/2	1/2	45.0	14.2	26.1	11.9	26.9
P-SHN-12NG	3/4	3/4	49.0	15.7	31.5	15.7	33.3
P-SHN-16NG	1	1	56.9	18.3	38.9	19.8	41

Hex Long Nipple
(Male NPT both ends)

P-SHLN

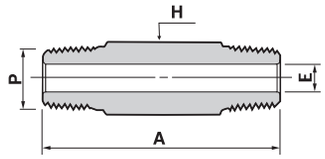

Part Number	P NPT Size	A	E	H Hex
P-SHLN-2N	1/8	★	4.8	11.1
P-SHLN-4N	1/4	★	7.1	14.2
P-SHLN-6N	3/8	★	9.7	17.4
P-SHLN-8N	1/2	★	11.9	22.2
P-SHLN-12N	3/4	★	15.7	26.9
P-SHLN-16N	1	★	22.4	34.9

★: Configure to order

Adapter
(Male NPT to female NPT)

P-MFAA

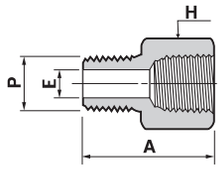

Part Number	P NPT Size	A	E	H Hex
P-MFAA-2N	1/8	27.4	4.8	14.2
P-MFAA-4N	1/4	35.6	7.1	19.05
P-MFAA-6N	3/8	37.8	9.6	22.2
P-MFAA-8N	1/2	49.0	11.9	26.9
P-MFAA-12N	3/4	50.3	15.7	33.3
P-MFAA-16N	1	58.0	22.4	41.2
10,000psig				
P-MFAA-4N-10K	1/4	36.3	5.8	25.4
P-MFAA-8N-10K	1/2	51.3	9.9	38.1

Reducing Adapter
(Male NPT to reduced female NPT)

P-MFRA

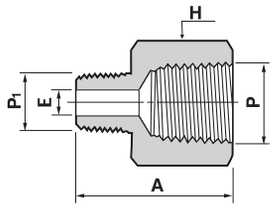

Part Number	P_1 Male NPT Size	P Female NPT Size	A	E	H Hex
P-MFRA-2-4N	1/8	1/4	31.5	4.8	19.05
P-MFRA-2-6N	1/8	3/8	33.5	4.8	22.2
P-MFRA-4-6N	1/4	3/8	37.8	7.1	22.2
P-MFRA-2-8N	1/8	1/2	40.0	4.8	26.9
P-MFRA-4-8N	1/4	1/2	44.5	7.1	26.9
P-MFRA-6-8N	3/8	1/2	44.5	9.6	26.9
P-MFRA-4-12N	1/4	3/4	45.7	7.1	33.3
P-MFRA-6-12N	3/8	3/4	45.7	9.6	33.3
P-MFRA-8-12N	1/2	3/4	51.1	11.9	33.3
P-MFRA-4-16N	1/4	1	50.8	7.1	41.2
P-MFRA-8-16N	1/2	1	54.9	11.9	41.2
P-MFRA-12-16N	3/4	1	55.1	15.7	41.2
10,000psig					
P-MFRA-8-4N-10K	1/2	1/4	46.0	5.8	38.1

Adapter
(Male ISO tapered to female NPT)

P-MFAA

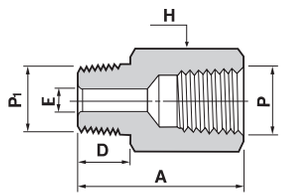

Part Number	P_1 PT Size	P NPT Size	A	D	E	H Hex
P-MFAA-2RN	1/8	1/8	27.4	9.7	4.8	14.2
P-MFAA-4RN	1/4	1/4	35.8	14.2	7.1	19.05
P-MFAA-6RN	3/8	3/8	37.6	14.2	9.7	22.2
P-MFAA-8RN	1/2	1/2	49.0	19.1	11.9	26.9
P-MFAA-12RN	3/4	3/4	50.3	19.1	15.7	33.3
P-MFAA-16RN	1	1	58.0	23.9	22.4	41.2

Adapter
(Male ISO paralled to female NPT)

P-MFAB

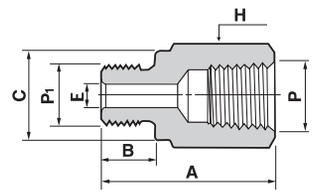

Part Number	P_1 PF Size	P NPT Size	A	B	C	E	H Hex
P-MFAB-2GN	1/8	1/8	24.9	7.1	13.7	4.1	14.2
P-MFAB-4GN	1/4	1/4	33.3	11.2	17.8	5.8	19.05
P-MFAB-6GN	3/8	3/8	37.8	11.2	21.8	7.9	22.2
P-MFAB-8GN	1/2	1/2	43.9	14.2	26.1	11.9	26.9
P-MFAB-12GN	3/4	3/4	50.8	15.7	31.5	15.7	33.3
P-MFAB-16GN	1	1	53.1	18.3	38.9	19.8	41.2

Reducing Hex Bushing
(Male NPT to reduced female NPT)

P-SHB

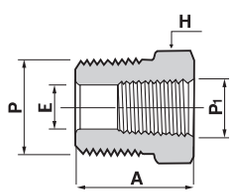

Part Number	P Male NPT Size	P_1 Female NPT Size	A	E	H Hex	Pressure Rasting (psig)		
						316SS	Brass	Carbon Steel
P-SHB-4-2N	1/4	1/8	26.7	7.1	14.2	6,500	3,300	6,500
P-SHB-6-2N	3/8	1/8	21.8	8.5	17.4	9,200	4,700	9,200
P-SHB-6-4N	3/8	1/4	30.0	9.6	19.05	6,600	3,300	6,600
P-SHB-8-2N	1/2	1/8	27.4	8.5	22.2	12,200	6,200	12,200
P-SHB-8-4N	1/2	1/4	27.4	11.0	22.2	8,300	4,400	8,300
P-SHB-8-6N	1/2	3/8	35.6	11.9	22.2	5,300	2,600	5,300
P-SHB-12-4N	3/4	1/4	27.4	11.0	26.9	12,000	6,000	12,000
P-SHB-12-6N	3/4	3/8	27.4	15.0	26.9	8,200	4,300	8,200
P-SHB-12-8N	3/4	1/2	41.4	15.7	26.9	4,900	2,400	4,900
P-SHB-16-4N	1	1/4	34.8	11.0	34.9	14,500	7,400	14,500
P-SHB-16-8N	1	1/2	34.8	18.5	34.9	8,600	4,300	8,600
P-SHB-16-12N	1	3/4	34.8	22.4	34.9	5,300	2,600	5,300

Pipe Cap
(Female NPT)

P-SC

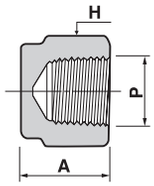

Part Number	P NPT Size	A	H Hex
P-SC-2N	1/8	19.1	14.2
P-SC-4N	1/4	22.9	19.05
P-SC-6N	3/8	26.2	22.2
P-SC-8N	1/2	34.0	26.9
P-SC-12N	3/4	36.6	33.3
P-SC-16N	1	41.1	41.2
10,000psig			
P-SC-4N-10K	1/4	28.2	25.4
P-SC-8N-10K	1/2	40.1	38.1

Pipe Plug
(Male NPT)

P-SP

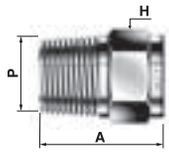

Part Number	P NPT Size	A	H Hex
P-SP-2N	1/8	19.05	11.1
P-SP-4N	1/4	24.1	14.2
P-SP-6N	3/8	25.0	17.4
P-SP-8N	1/2	30.5	22.2
P-SP-12N	3/4	30.5	26.9
P-SP -16N	1	38.1	34.9

Hex Coupling
(Female NPT both ends)

P-SHC

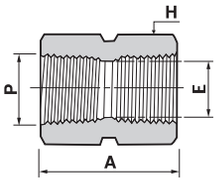

Part Number	P NPT Size	A	E	H Wrench Flat
P-SHC-2N	1/8	20.3	8.5	14.2
P-SHC-4N	1/4	30.0	11.0	19.05
P-SHC-6N	3/8	33.0	14.4	22.2
P-SHC-8N	1/2	39.4	17.8	26.9
P-SHC-12N	3/4	41.0	23.0	33.3
P-SHC-16N	1	50.5	29.0	41.2
10,000psig				
P-SHC-4N-10K	1/4	30.2	11.4	25.4
P-SHC-8N-10K	1/2	39.6	18.5	38.1

Hex Reducing Coupling
(Female NPT to reduced female NPT)

P-SHRC

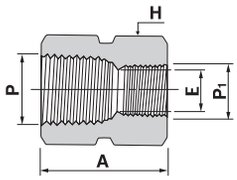

Part Number	P NPT Size	P_1 Reduced NPT Size	A	E	H Hex
P-SHRC-4-2N	1/4	1/8	31.2	8.5	19.05
P-SHRC-6-4N	3/8	1/4	34.8	11.0	22.2
P-SHRC-8-2N	1/2	1/8	39.4	8.5	26.9
P-SHRC-8-4N	1/2	1/4	44.2	11.0	26.9
P-SHRC-8-6N	1/2	3/8	45.0	14.5	26.9
P-SHRC-12-4N	3/4	1/4	45.7	11.0	33.3
P-SHRC-12-8N	3/4	1/2	52.0	17.8	33.3
P-SHRC-16-4N	1	1/4	50.8	11.0	41.2
P-SHRC-16-8N	1	1/2	55.4	17.8	41.2
P-SHRC-16-12N	1	3/4	57.0	23.0	41.2
10,000psig					
P-SHRC-8-4N-10K	1/2	1/4	46.0	5.8	38.1

Elbow
(Female NPT both ends)

P-SL

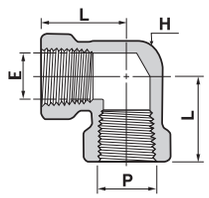

Part Number	P NPT Size	L	E	H Wrench Flat
P-SL-2N	1/8	24.1	8.5	12.7
P-SL-4N	1/4	29.0	11.0	17.5
P-SL-6N	3/8	34.5	14.4	20.6
P-SL-8N	1/2	37.0	17.8	25.4
P-SL-12N	3/4	46.5	23.0	31.8
P-SL-16N	1	48.8	29.0	42.9
10,000psig				
P-SL-4N-10K	1/4	39.6	11.4	25.4
P-SL-8N-10K	1/2	50.0	18.5	42.9

Street Elbow
(Female to male NPT)

P-SSL

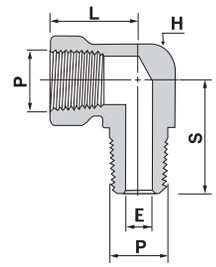

Part Number	P NPT Size	L	S	E	H Wrench Flat
P-SSL-2N	1/8	24.1	19.6	4.8	12.7
P-SSL-4N	1/4	29.0	26.5	7.1	17.5
P-SSL-6N	3/8	34.5	28.2	9.6	20.6
P-SSL-8N	1/2	37.0	35.3	11.9	25.4
P-SSL-12N	3/4	46.5	39.6	15.7	31.8
P-SSL-16N	1	48.8	49.2	22.3	42.9

Reducing Street Elbow
(Female to male NPT)

P-SRSL

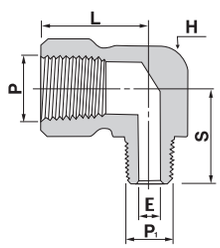

Part Number	P Female NPT Size	P_1 Male NPT Size	L	S	E	H Wrench Flat
P-SRSL-4-2N	1/4	1/8	29.0	22.4	4.8	17.5
P-SRSL-6-4N	3/8	1/4	34.5	28.2	7.1	20.6
P-SRSL-8-4N	1/2	1/4	37.0	30.5	7.1	25.4
P-SRSL-8-6N	1/2	3/8	37.0	30.5	9.6	25.4
P-SRSL-12-8N	3/4	1/2	46.5	39.6	11.9	31.8
P-SRSL-16-8N	1	1/2	48.8	44.5	11.9	42.9

Male Elbow
(Male NPT both ends)

P-SML

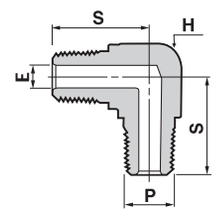

Part Number	P NPT Size	L	E	H Wrench Flat
P-SML-2N	1/8	19.05	4.8	12.7
P-SML-4N	1/4	24.5	7.1	12.7
P-SML-6N	3/8	26.9	9.6	17.5
P-SML-8N	1/2	33.2	11.9	20.6
P-SML-12N	3/4	35.3	15.7	25.4
P-SML-16N	1	44.5	22.4	31.8

Tee
(Female NPT)

P-ST

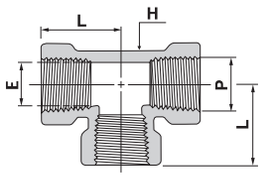

Part Number	P NPT Size	L	E	H Wrench Flat
P-ST-2N	1/8	24.1	8.5	12.7
P-ST-4N	1/4	29.0	11.0	17.5
P-ST-6N	3/8	34.5	14.4	20.6
P-ST-8N	1/2	37.0	17.8	25.4
P-ST-12N	3/4	46.5	23.0	31.8
P-ST-16N	1	48.8	29.0	42.9
10,000psig				
P-ST-4N-10K	1/4	39.6	11.4	25.4
P-ST-8N-10K	1/2	50.0	18.5	42.9

Run Tee
(Female to male to Female NPT)

P-SRT

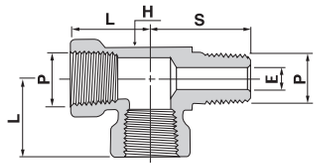

Part Number	P NPT Size	L	S	E	H Wrench Flat
P-SRT-2N	1/8	24.1	19.6	4.8	12.7
P-SRT-4N	1/4	29.0	26.5	7.1	17.5
P-SRT-6N	3/8	34.5	28.2	9.6	20.6
P-SRT-8N	1/2	37.0	35.3	11.9	25.4
P-SRT-12N	3/4	46.5	39.6	15.7	31.8
P-SRT-16N	1	48.8	49.2	22.4	42.9

Branch Tee
(Female to male to male NPT)

P-SBT

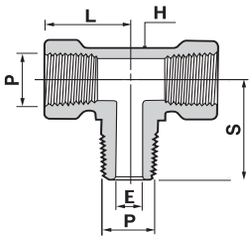

Part Number	P NPT Size	L	S	E	H Wrench Flat
P-SBT-2N	1/8	24.1	19.6	4.8	12.7
P-SBT-4N	1/4	29.0	26.5	7.1	17.5
P-SBT-6N	3/8	34.5	28.2	9.6	20.6
P-SBT-8N	1/2	37.0	35.3	11.9	25.4
P-SBT-12N	3/4	46.5	39.6	15.7	31.8
P-SBT-16N	1	48.8	49.2	22.4	42.9

Male Tee
(Male NPT)

P-SMT

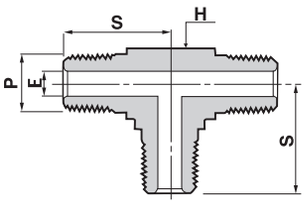

Part Number	P NPT Size	S	E	H Wrench Flat
P-SMT-2N	1/8	19.05	4.8	12.7
P-SMT-4N	1/4	24.5	7.1	12.7
P-SMT-6N	3/8	26.9	9.6	17.5
P-SMT-8N	1/2	33.2	11.9	20.6
P-SMT-12N	3/4	35.3	15.7	25.4
P-SMT-16N	1	44.5	22.4	31.8

Cross
(Female NPT)

P-SX

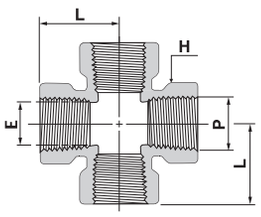

Part Number	P NPT Size	L	E	H Wrench Flat
P-SX-2N	1/8	24.1	8.5	12.7
P-SX-4N	1/4	29.0	11.0	17.5
P-SX-6N	3/8	34.5	14.4	20.6
P-SX-8N	1/2	37.0	17.8	25.4
P-SX-12N	3/4	46.5	23.0	31.8
P-SX-16N	1	48.8	29.0	42.9
10,000psig				
P-SX-4N-10K	1/4	39.6	11.4	25.4
P-SX-8N-10K	1/2	49.5	17.8	42.9

Union Ball Joint
(Female NPT both ends)

P-SUJ

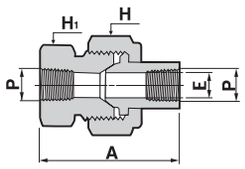

Part Number	P NPT Size	A	E	H Hex	H1 Hex
P-SUJ-F-2N	1/8	45.7	6.9	28.6	23.8
P-SUJ-F-4N	1/4	59.4	9.1	34.9	30.2
P-SUJ-F-6N	3/8	63.5	13.2	38.1	33.3
P-SUJ-F-8N	1/2	68.6	15.7	44.5	41.3
P-SUJ-F-12N	3/4	79.2	22.4	50.8	47.6
P-SUJ-F-16N	1	90.4	26.2	63.5	60.3

ISO Parallel Gasket

SGC

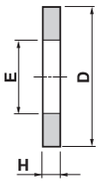

Part Number	PF Size	E	H	D
SGC-2	1/8	9.9	1.0	15.0
SGC-4	1/4	13.2	1.5	19.1
SGC-6	3/8	16.8	1.5	23.1
SGC-8	1/2	21.1	1.5	26.9
SGC-12	3/4	26.7	2.0	33.0
SGC-16	1	33.3	2.0	40.1

Fusible Plug

Features

- Fusible plugs consist of 316 stainless steel body and eutectic alloy with a specific melting point.
- When fusible plug is exposed to a temperature above its melting point, the eutectic alloy melts and the pressure inside the fitting is released to atmosphere.
- Fusible plugs are used where heat can cause a fire or an explosive chemical reaction.
- Fusible plugs are mainly installed onto compression cylinders, oil, liquified gas and steam boilers.

Ordering Information and Dimension

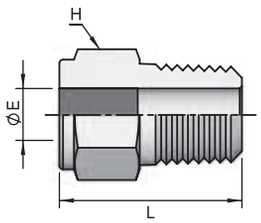

Basic Ordering Number	NPT Thread Size	Dimensions, mm (inch)		
		L	E	H
P-SFP-4N	1/4″	24.1 (0.95)	6.4 (0.25)	14.2 (9/16)
P-SFP-6N	3/8″	25.0 (0.98)	6.4 (0.25)	17.4 (11/16)
P-SFP-8N	1/2″	30.5 (1.20)	8.7 (0.34)	22.2 (7/8)

P-SFP — Fitting Model

4N — End Connection
- 4N : 1/4″ NPT
- 6N : 3/8″ NPT
- 8N : 1/2″ NPT

160 — Melting Point
- 160 : 160℉ (71℃)
- 201 : 201℉ (94℃)
- 255 : 255℉ (124℃)
- 281 : 281℉ (138℃)

S6 — Body Material
- S6 : SS 316

Snubber Fitting

Features

- Snubber fittings protect gauges and instruments from system pressure surge and shock.
- Snubber fitting consists of 316 stainless steel or brass body and sintered 316 stainless steel element.
- Pressure damping is accomplished through sintered 316 stainless steel element.

Ordering Information and Dimension

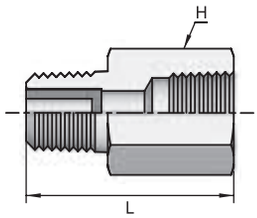

Basic Ordering Number	NPT Thread Size	Dimensions, mm (inch)		Working Pressure, psig (bar) @ 20℃ (70℉)	
		L	H	SS 316	Brass
P-MFAA-4N	1/4″	35.6 (1.40)	19.05 (3/4)	4,400 (303)	2,200 (151)
P-MFAA-8N	1/2″	49.0 (1.93)	26.98 (1-1/16)	4,900 (337)	2,400 (165)

P-MFAA — Fitting Model

8N — End Connection
- 4N : 1/4″ NPT
- 8N : 1/2″ NPT

90 — Pore Size
- 05 : 0.5 ~ 2㎛
- 2 : 1 ~ 4㎛
- 7 : 5 ~ 10㎛
- 15 : 11 ~ 25㎛
- 60 : 50 ~ 75㎛
- 90 : 75 ~ 110㎛

S6 — Body Material
- S6 : SS 316
- BS : Brass

Vent Protector

Features

- S-LOK vent protectors, more commonly known as mud dauber fittings, protect open ends of instrument, tubing, outlet vent, and bleed-off lines.
- The mesh wire screen prevents foreign object, such as mud insects, from entering and clogging various systems and causing damage.
- Vent protectors are available in stainless steel and brass.
- Dimensions are for reference only and are subject to change without prior notice.

Materials of Construction

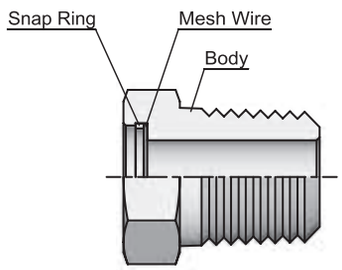

No	Parts Name	Material
1	Body	316 Stainless steel or Brass
2	Vent	316 Stainless steel
3	Snap Ring	Stainless steel

Dimensions

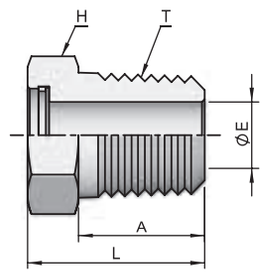

Basic Ordering Number	E	T (NPT)	A	L	H
P-SVP-4N	7.1	1/4	14	19.8	14.28
P-SVP-6N	10.4	3/8	15	20.6	17.46
P-SVP-8N	10.4	1/2	19	26.2	22.22

Ordering Information

- Selection the applicable options from designators listed.

P-SVP — **4N** — **S6**

Fitting Series
- P-SVP : Vent Protector

Pipe Thread Size
- 4N : 1/4″ NDT
- 6N : 3/8″ NDT
- 8N : 1/2″ NDT

Body Material
- S6 : 316 Stainless Steel
- BS : Brass

Instrument Weld Fittings

Features

- S-LOK instrument weld fittings are designed in accordance with ASME B16.11 welding connections.
- All socket weld ports have a tapered shape at the end that hold tubing properly and consistent alignment.
- Pressure ratings for weld fittings are in accordance with ASME B31.3 and safety factor 4:1

Union

P-SWFC

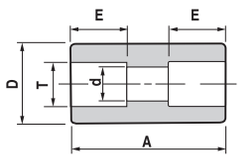

Part Number	T Tube O.D	d	D	E	A	Working Psig	Pressure bar
P-SWFC-4T	1/4	4.8	13.0	7.1	19.0	10,000	689
P-SWFC-6T	3/8	7.1	15.8	7.9	22.4	7,600	523
P-SWFC-8T	1/2	10.2	19.0	9.7	26.9	6,200	427
P-SWFC-10T	5/8	12.7	24.0	10.4	30.2	6,400	440
P-SWFC-12T	3/4	15.7	26.9	11.2	33.3	5,500	378
P-SWFC-16T	1	22.1	35.0	15.7	36.6	5,200	358

Union Elbow

P-SWLA

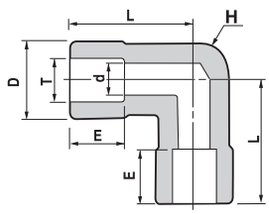

Part Number	T Tube O.D	d	D	E	H Wrench Flat	L	Working Psig	Pressure bar
P-SWLA-4T	1/4	4.6	13.4	7.1	12.7	21.8	11,300	778
P-SWLA-6T	3/8	7.1	15.8	7.9	12.7	24.5	8,400	578
P-SWLA-8T	1/2	10.2	20.6	9.7	17.5	29.0	7,800	537
P-SWLA-10T	5/8	12.7	23.8	10.4	20.6	34.5	6,700	461
P-SWLA-12T	3/4	15.7	28.6	11.2	25.4	37.0	6,700	461
P-SWLA-16T	1	22.1	35.0	15.7	31.8	46.5	6,100	420

Union Tee

P-SWTA

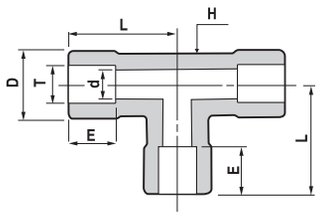

Part Number	T Tube O.D	d	D	E	H Wrench Flat	L	Working Psig	Pressure bar
P-SWTA-2T	1/8	2.3	13.4	2.5	12.7	15.0	11,800	813
P-SWTA-4T	1/4	4.6	13.4	7.1	12.7	21.8	11,300	778
P-SWTA-6T	3/8	7.1	15.8	7.9	12.7	24.5	8,400	578
P-SWTA-8T	1/2	10.2	20.6	9.7	17.4	29.0	7,800	537
P-SWTA-10T	5/8	12.7	23.8	10.4	20.6	34.5	6,700	461
P-SWTA-12T	3/4	15.7	28.6	11.2	25.4	37.0	6,700	461
P-SWTA-16T	1	22.1	36.12	15.7	36.12	46.5	6,100	420

Male Connector

P-SSA

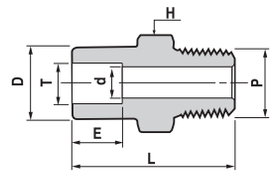

Part Number	T Tube O.D	P-NPT	d	D	E	H Hex	L	Working Psig	Pressure bar
P-SSA-4T-4N	1/4	1/4	4.6	12.2	7.1	14.2	29.2	7,500	516
P-SSA-6T-4N	3/8	1/4	7.1	15.3	7.9	15.8	31.8	7,500	516
P-SSA-6T-6N	3/8	3/8	7.1	15.3	7.9	17.4	31.8	7,300	502
P-SSA-6T-8N	3/8	1/2	7.1	15.3	7.9	22.2	37.3	7,200	496
P-SSA-8T-4N	1/2	1/4	7.1	18.5	9.7	19.05	33.3	6,200	427
P-SSA-8T-6N	1/2	3/8	9.4	18.5	9.7	19.05	33.3	6,200	427
P-SSA-8T-8N	1/2	1/2	10.2	18.5	9.7	22.2	38.9	6,200	427

Female Connector

P-SSB

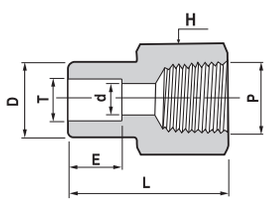

Part Number	T Tube O.D	P-NPT Female Pipe Size	d	D	E	H Hex	L	Working Psig	Pressure bar
P-SSB-2T-2N	1/8	1/8	2.3	7.4	2.5	14.2	21.1	6,100	420
P-SSB-4T-2N	1/4	1/8	4.6	12.2	7.1	14.2	26.7	6,100	420
P-SSB-4T-4N	1/4	1/4	4.6	12.2	7.1	19.05	30.0	6,200	427
P-SSB-6T-4N	3/8	1/4	7.1	15.3	7.9	19.05	31.5	6,200	427
P-SSB-8T-6N	1/2	3/8	10.2	18.5	9.7	22.2	34.5	5,000	344
P-SSB-8T-8N	1/2	1/2	10.2	18.5	9.7	26.9	40.4	4,600	316
P-SSB-10T-8N	5/8	1/2	12.7	23.4	10.4	26.9	41.9	4,600	316
P-SSB-12T-12N	3/4	3/4	15.7	26.7	11.2	33.3	43.9	4,300	296

Male Elbow

P-SMLSW

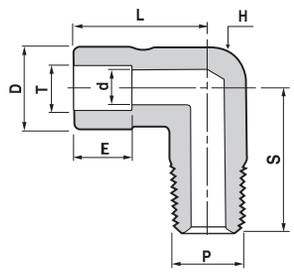

Part Number	T Tube O.D	P-NPT	d	D	E	H Wrench Flat	L	S	Working Psig	Pressure bar
P-SMLSW-4T-4N	1/4	1/4	4.6	15.8	7.1	12.7	20.1	24.5	7,500	516
P-SMLSW-6T-4N	3/8	1/4	7.1	15.8	7.9	12.7	24.1	24.5	7,500	516
P-SMLSW-6T-6N	3/8	3/8	7.1	20.6	7.9	17.5	24.6	29.0	7,300	502
P-SMLSW-6T-8N	3/8	1/2	7.1	23.8	7.9	20.6	25.9	34.5	7,200	496
P-SMLSW-8T-8N	1/2	1/2	10.2	23.8	9.7	20.6	27.4	34.5	6,200	427
P-SMLSW-12T-12N	3/4	3/4	15.7	28.6	11.2	25.4	37.0	37.0	6,700	461

Female Elbow

P-SFLSW

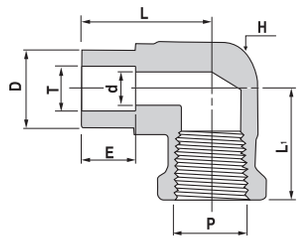

Part Number	T Tube O.D	P-NPT Female Pipe Size	d	D	E	H Wrench Flat	L	L_1	Working Psig	Pressure bar
P-SFLSW-4T-4N	1/4	1/4	4.6	12.2	7.1	17.5	22.9	29.7	6,200	427
P-SFLSW-6T-4N	3/8	1/4	7.1	15.3	7.9	17.5	25.1	29.7	7,000	482
P-SFLSW-6T-8N	3/8	1/2	7.1	15.3	7.9	25.4	28.7	37.0	5,400	372
P-SFLSW-8T-8N	1/2	1/2	10.2	18.5	9.7	25.4	30.2	38.0	5,400	372

Pipe Weld to Tube Socket Weld

P-SWRM

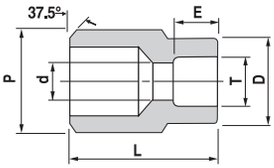

Part Number	P Pipe Size	T Tube Socket Size	d	D	E	L	Working Psig	Pressure bar
P-SWRM-4P-4T	1/4	1/4	4.6	13.7	7.1	22.4	9,600	661
P-SWRM-6P-6T	3/8	3/8	7.1	15.3	7.9	26.2	7,600	523
P-SWRM-6P-8T	3/8	1/2	10.2	18.5	9.7	27.9	6,200	427
P-SWRM-8P-4T	1/2	1/4	4.6	12.2	7.1	28.4	7,300	502
P-SWRM-8P-6T	1/2	3/8	7.1	15.3	7.9	28.4	7,300	502
P-SWRM-8P-8T	1/2	1/2	10.2	18.5	9.7	30.2	6,200	427
P-SWRM-12P-6T	3/4	3/8	7.1	15.3	7.9	38.1	6,200	427
P-SWRM-12P-8T	3/4	1/2	10.2	18.5	9.7	38.1	6,200	427

Tube Weld to Tube Socket Weld

P-SWRM

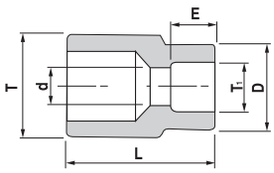

Part Number	T Tube O.D	T_1 Tube Socket Size	d	D	E	L	Working Psig	Pressure bar
P-SWRM-4T-2T	1/4	1/8	2.3	7.4	2.5	14.2	11,800	813
P-SWRM-6T-4T	3/8	1/4	4.6	12.2	7.1	19.1	7,700	530
P-SWRM-8T-4T	1/2	1/4	4.6	18.2	7.1	22.4	7,000	482
P-SWRM-8T-6T	1/2	3/8	8.1	15.7	7.9	22.4	7,000	482
P-SWRM-12T-8T	3/4	1/2	10.2	18.5	9.7	28.4	5,900	406
P-SWRM-16T-8T	1	1/2	10.2	18.5	9.7	35.1	5,000	344

S-LOK®

Hose Adapter Fittings

The best partner for value creation
We support the innovations of customer

08

Catalogue No. S-LOK Mar.2024

Features

- S-LOK Hose Connectors allow easy installation of soft plastic or rubber tubing.
- Hose barb design holds soft plastic or rubber tubing inside diameter securely.
- Reusable to other assemblies
- Stainless steel and brass construction.
- Size range : 1/8 ~ 1 in.
- Can be used without hose clamp in low pressure application.
- Hose clamps may be required for high pressure application.

Hose Barb Dimensions

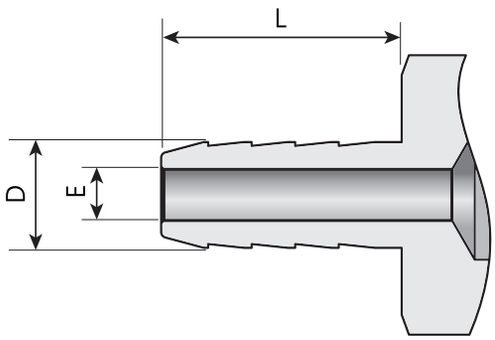

Nominal Hose I.D.	Width across flat		
	D	E	L
1/8	0.15 (3.8)	0.08 (2.0)	0.40 (10.2)
3/16	0.23 (5.8)	0.12 (3.0)	0.59 (15.0)
1/4	0.30 (7.6)	0.19 (4.8)	0.79 (20.1)
5/16	0.38 (9.7)	0.19 (4.8)	0.87 (22.1)
3/8	0.45 (11.4)	0.30 (7.6)	0.87 (22.1)
1/2	0.60 (15.2)	0.38 (9.7)	0.94 (23.9)
5/8	0.75 (19.0)	0.50 (12.7)	0.98 (24.9)
3/4	0.90 (22.9)	0.63 (16.0)	1.05 (26.7)
1	1.20 (30.5)	0.88 (22.4)	1.19 (30.2)

Ordering Information

SPHA – 4 – 4T – S6

Fitting Series

- **SHAM** : Male Connector
- **SHAF** : Female Connector
- **SHAT** : S-LOK Tube Adapter
- **SHAS** : S-LOK Tube Fitting Connector

Nominal Hose I.D

- **2** : 1/8″
- **3** : 3/16″
- **4** : 1/4″
- **5** : 5/16″
- **6** : 3/8″
- **8** : 1/2″
- **10** : 5/8″
- **12** : 3/4″
- **16** : 1″

Connection Size

- **2N** : 1/8″ NPT
- **4N** : 1/4″ NPT
- **6N** : 3/8″ NPT
- **8N** : 1/2″ NPT
- **12N** : 3/4″ NPT
- **16N** : 1″ NPT
- **2T** : 1/8″ TUBE O.D
- **4T** : 1/4″ TUBE O.D
- **6T** : 3/8″ TUBE O.D
- **8T** : 1/2″ TUBE O.D
- **12T** : 3/4″ TUBE O.D
- **16T** : 1″ TUBE O.D

Material

- **S6** : 316 Stainless Steel
- **BS** : Brass

Male Connectors

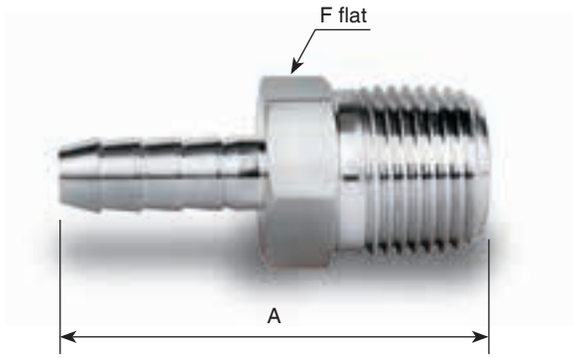

Ordering Number	End Connections		Dimensions, in. (mm)		
	Nominal Hose I.D	Male NPT	F Hex flat	A Length	Min. Inside Diameter
SHAM-2-2N	1/8	1/8	7/16 (11.1)	1.08 (27.4)	0.08 (2.0)
SHAM-2-4N	1/8	1/4	9/16 (14.2)	1.26 (32.0)	0.08 (2.0)
SHAM-3-2N	3/16	1/8	7/16 (11.1)	1.27 (32.2)	0.12 (3.0)
SHAM-3-4N	3/16	1/4	9/16 (14.2)	1.45 (36.8)	0.12 (3.0)
SHAM-4-2N	1/4	1/8	7/16 (11.1)	1.47 (37.3)	0.19 (4.8)
SHAM-4-4N	1/4	1/4	9/16 (14.2)	1.65 (41.9)	0.19 (4.8)
SHAM-4-6N	1/4	3/8	11/16 (17.4)	1.66 (42.2)	0.19 (4.8)
SHAM-4-8N	1/4	1/2	7/8 (22.2)	1.85 (47.0)	0.19 (4.8)
SHAM-5-2N	5/16	1/8	7/16 (11.1)	1.55 (39.4)	0.19 (4.8)
SHAM-5-4N	5/16	1/4	9/16 (14.2)	1.73 (43.9)	0.19 (4.8)
SHAM-5-6N	5/16	3/8	11/16 (17.4)	1.74 (44.2)	0.19 (4.8)
SHAM-5-8N	5/16	1/2	7/8 (22.2)	1.96 (49.8)	0.19 (4.8)
SHAM-6-4N	3/8	1/4	9/16 (14.2)	1.73 (43.9)	0.30 (7.6)
SHAM-6-6N	3/8	3/8	11/16 (17.4)	1.74 (44.2)	0.30 (7.6)
SHAM-6-8N	3/8	1/2	7/8 (22.2)	1.96 (49.8)	0.30 (7.6)
SHAM-8-4N	1/2	1/4	11/16 (17.4)	1.80 (45.7)	0.28 (7.1)
SHAM-8-6N	1/2	3/8	11/16 (17.4)	1.81 (46.0)	0.38 (9.7))
SHAM-8-8N	1/2	1/2	7/8 (22.2)	2.03 (51.6)	0.38 (9.7)
SHAM-10-6N	5/8	3/8	1-1/16 (26.9)	1.88 (47.8)	0.38 (9.7)
SHAM-10-8N	5/8	1/2	1-1/16 (26.9)	2.07 (52.6)	0.47 (11.9)
SHAM-10-12N	5/8	3/4	1-1/16 (26.9)	2.07 (52.6)	0.50 (12.7)
SHAM-12-8N	3/4	1/2	1-1/16 (26.9)	2.14 (54.4)	0.47 (11.9)
SHAM-12-12N	3/4	3/4	1-1/16 (26.9)	2.14 (54.4)	0.63 (16.0)
SHAM-12-16N	3/4	1	1-3/8 (34.9)	2.43 (61.7)	0.63 (16.0)
SHAM-16-12N	1	3/4	1-3/8 (34.9)	2.38 (60.5)	0.63 (16.0)
SHAM-16-16N	1	1	1-3/8 (34.9)	2.57 (65.3)	0.88 (22.4)

Female Connectors

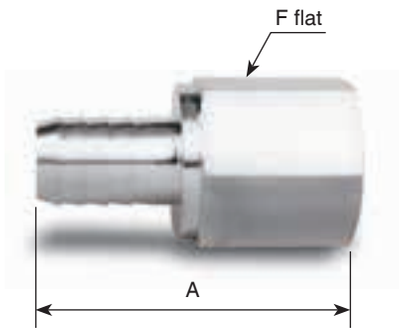

Ordering Number	End Connections		Dimensions, in. (mm)		
	Nominal Hose I.D	Female NPT	F Hex flat	A Length	Diameter
SHAF-2-2N	1/8	1/8	9/16 (14.2)	1.11 (28.2)	0.08 (2.0)
SHAF-2-4N	1/8	1/4	3/4 (19.0)	1.26 (32.0)	0.08 (2.0)
SHAF-3-2N	3/16	1/8	9/16 (14.2)	1.29 (32.8)	0.12 (3.0)
SHAF-3-4N	3/16	1/4	3/4 (19.0)	1.44 (36.6)	0.12 (3.0)
SHAF-4-2N	1/4	1/8	9/16 (14.2)	1.47 (37.3)	0.19 (4.8)
SHAF-4-4N	1/4	1/4	3/4 (19.0)	1.64 (41.7)	0.19 (4.8)
SHAF-4-6N	1/4	3/8	7/8 (22.2)	1.71 (43.4)	0.19 (4.8)
SHAF-5-4N	5/16	1/4	3/4 (19.0)	1.73 (43.9)	0.19 (4.8)
SHAF-5-6N	5/16	3/8	7/8 (22.2)	1.82 (46.2)	0.19 (4.8)
SHAF-6-4N	3/8	1/4	3/4 (19.0)	1.69 (42.9)	0.30 (7.6)
SHAF-6-6N	3/8	3/8	7/8 (22.2)	1.78 (45.2)	0.30 (7.6)
SHAF-6-8N	3/8	1/2	1-1/16 (26.9)	2.03 (51.6)	0.30 (7.6)
SHAF-8-8N	1/2	1/2	1-1/16 (26.9)	2.13 (54.1)	0.38 (9.7)

S-LOK Tube Adapters

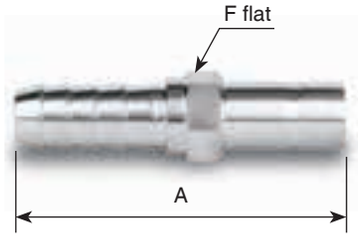

Ordering Number	End Connections		Dimensions, in. (mm)		
	Nominal Hose I.D	Tube O.D	F Hex flat	A Length	Min. Inside Diameter
SHAT-2-2T	1/8	1/8	5/16 (7.9)	1.36 (34.5)	0.08 (2.0)
SHAT-2-4T	1/8	1/4	3/8 (9.5)	1.45 (36.8)	0.08 (2.0)
SHAT-4-4T	1/4	1/4	7/16 (11.1)	1.85 (47.0)	0.19 (4.8)
SHAT-4-6T	1/4	3/8	7/16 (11.1)	1.91 (48.5)	0.19 (4.8)
SHAT-5-4T	5/16	1/4	7/16 (11.1)	1.93 (49.0)	0.19 (4.8)
SHAT-6-4T	3/8	1/4	9/16 (14.2)	1.93 (49.0)	0.17 (4.3)
SHAT-6-6T	3/8	3/8	9/16 (14.2)	1.99 (50.5)	0.27 (6.9)
SHAT-6-8T	3/8	1/2	5/8 (15.8)	2.25 (57.2)	0.30 (7.6)
SHAT-8-6T	1/2	3/8	11/16 (17.4)	2.06 (52.3)	0.27 (6.9)
SHAT-8-8T	1/2	1/2	11/16 (17.4)	2.32 (58.9)	0.38 (9.7)
SHAT-12-12T	3/4	3/4	1-3/16 (30.1)	2.49 (63.3)	0.58 (14.7)
SHAT-16-16T	1	1	1-3/8 (34.9)	3.05 (77.5)	0.80 (20.3)

S-LOK Tube Fitting Connectors

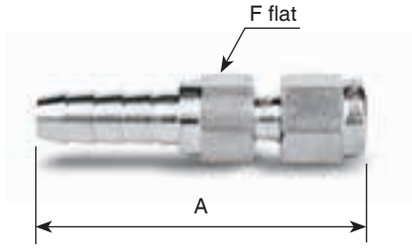

Ordering Number	End Connections		Dimensions, in. (mm)		
	Nominal Hose I.D	Tube O.D	F Hex flat	A Length	Min. Inside Diameter
SHAS-2-2T	1/8	1/8	7/16 (11.1)	1.42 (36.1)	0.08 (2.0)
SHAS-4-2T	1/4	1/8	7/16 (11.1)	1.81 (46.0)	0.09 (2.3)
SHAS-4-4T	1/4	1/4	9/16 (14.2)	1.92 (48.8)	0.19 (4.8)
SHAS-6-4T	3/8	1/4	9/16 (14.2)	1.99 (50.6)	0.19 (4.8)
SHAS-6-6T	3/8	3/8	3/4 (19.0)	2.06 (52.3)	0.28 (7.1)
SHAS-8-8T	1/2	1/2	7/8 (22.2)	2.24 (56.9)	0.38 (9.7)

Push-On Hose Fittngs

The best partner for value creation
We support the innovations of customers

09

Catalogue No. S-LOK Mar.2024

Features

- No use special tools can quick installation.
- Easy and fast.
- Possible use hose size range of 1/4 to 1 in.
- All push on-hose fittings are reusable.

How to Assembly

1. Trim the hose end for leave flat and clean hose end.

2. Insert fitting first barb into hose. (use light oil or soapy water lubricate help to ease assembly)

3. Grip the hose or fitting and push on hose until hose seats into blue finishing cap.
4. Completed Assembly, ensure that the hose is completely inserted.

How to Disassembly

1. Cut hose lengthwise from blue finishing cap to end of barb.

2. Bend hose to expose barbs, then remove hose by quickly pulling.

Ordering Information

SPHA — **4** — **4T** — **S6**

Fitting Series
- **SPHS** : S-LOK Tube Fitting Connector
- **SPHA** : S-LOK Tube Adapter
- **SPHM** : Male Connector
- **SPHU** : Union

Nominal Hose I.D
- **4** : 1/4″
- **6** : 3/8″
- **8** : 1/2″
- **12** : 3/4″
- **16** : 1″

Connection Size
- **4T** : 1/4″ Tube O.D
- **6T** : 3/8″ Tube O.D
- **8T** : 1/2″ Tube O.D
- **12T** : 3/4″ Tube O.D
- **16T** : 1″ Tube O.D
- **4N** : 1/4″ NPT
- **6N** : 3/8″ NPT
- **8N** : 1/2″ NPT
- **12N** : 3/4″ NPT
- **16N** : 1″ NPT

Body Material
- **S6** : 316 Stainless Steel
- **BS** : Brass

S-LOK Tube Fitting Connectors

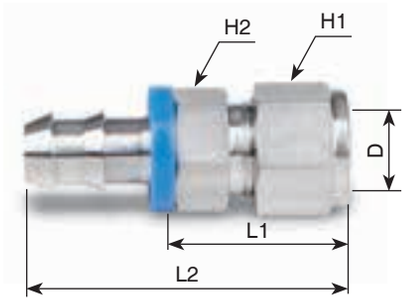

Basic Ordering Number	Nominal Hose I.D	Tube O.D D	HEX. H_1	HEX. H_2	Dimension, mm		
					L_1	L_2	MIN.ID
SPHS-4-4T	1/4″	1/4″	9/16″	1/2″	26.7	46.5	4.3
SPHS-6-6T	3/8″	3/8″	11/16″	5/8″	29.4	51.5	6.9
SPHS-8-8T	1/2″	1/2″	7/8″	13/16″	33.2	60.1	9.1
SPHS-12-12T	3/4″	3/4″	1-1/8″	1-1/16″	34.5	76.7	14.7
SPHS-16-16T	3/4″	3/4″	1-1/2″	1-3/8″	41.0	88.0	20.3

S-LOK Tube Adapters

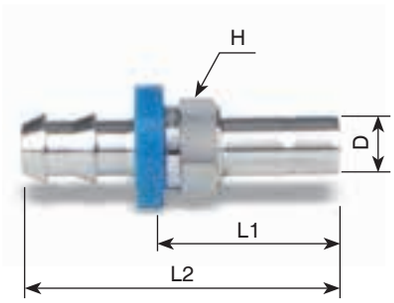

Basic Ordering Number	Nominal Hose I.D	Tube O.D D	HEX. H	Dimension, mm		
				L_1	L_2	MIN.ID
SPHA-4-4T	1/4″	1/4″	7/16″	25.2	45.0	4.3
SPHA-6-6T	3/8″	3/8″	9/16″	29.5	51.6	6.9
SPHA-8-8T	1/2″	1/2″	11/16″	35.8	62.7	9.1
SPHA-12-12T	3/4″	3/4″	15/16″	37.6	79.8	14.7
SPHA-16-16T	1″	1″	1-1/4″	46.7	93.7	20.3

Male Connectors

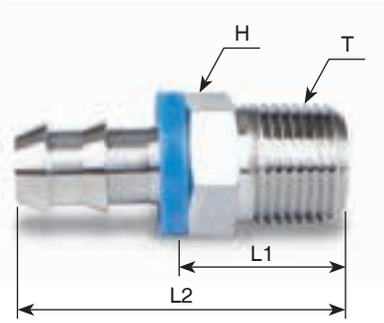

Basic Ordering Number	Nominal Hose I.D	Thread T (NPT)	HEX. H	Dimension, mm		
				L_1	L_2	MIN.ID
SPHM-4-4N	1/4″	1/4″	9/16″	22.9	42.7	4.3
SPHM-6-4N	3/8″	1/4″	9/16″	22.9	45.0	6.9
SPHM-6-6N	3/8″	3/8″	11/16″	24.6	46.7	6.9
SPHM-8-8N	1/2″	1/2″	7/8″	28.7	55.6	9.1
SPHM-12-12N	3/4″	3/4″	1-1/16″	33.8	76.0	14.7
SPHM-16-16N	1″	1″	1-3/8″	38.6	85.6	20.3

Unions

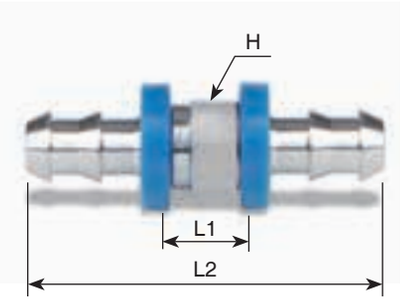

Basic Ordering Number	Nominal Hose I.D	HEX. H	Dimension, mm		
			L_1	L_2	MIN.ID
SPHU-4-4	1/4″	7/16″	10.7	50.3	4.3
SPHU-6-6	3/8″	9/16″	13.2	57.4	6.9
SPHU-8-8	1/2″	11/16″	13.7	67.5	9.1
SPHU-12-12	3/4″	15/16″	14.3	98.7	14.7
SPHU-16-16	1″	1-1/4″	16.5	110.5	20.3

S-LOK®

Ultra Vacuum Fittings

The best partner for value creation
We support the innovations of customers

10

Catalogue No. S-LOK Mar.2024

Features

- Sealing performance is maintained with repeated separation operation.
- All Stainless Steel 316 and FKM O-Ring
- Temperature Rating : -31 to 204℃ (-25 to 400℉)
- The helium leak tested to a maximum leak rate of 4×10^{-9} atm. cc/s at ambient temperature.

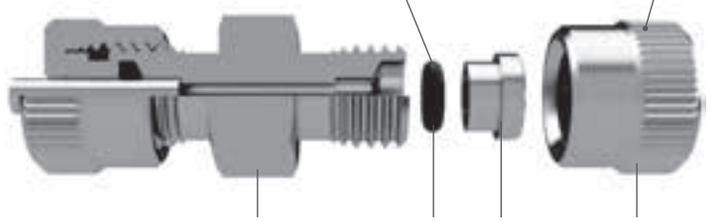

Ordering Information and Dimensions

- Dimensions are for reference only and are subject to change.
- The E dimension refers to the smallest nominal inside diameter of the part.

UTMC	8	8N	S6
Fitting Series	Ultra Vaccum Fitting Size	Connection Size	Body Material
• **UTU** : Union • **UTL** : Union Elbow • **UTT** : Union Tee • **UTUR** : Reducing Union • **UTMC** : Male Connector • **UTA** : S-LOK Tube Adapter • **UTUS** : S-LOK Fitting Connector • **UTN** : Nut	• **1** : 1/16" • **2** : 1/8" • **4** : 1/4" • **6** : 3/8" • **8** : 1/2" • **10** : 5/8" • **12** : 3/4" • **16** : 1" • **24** : 1-1/2"	• **4** : 1/4" • **6** : 3/8" • **8** : 1/2" • **10** : 5/8" • **12** : 3/4" • **16** : 1" • **20** : 1-1/4" • **24** : 1-1/2" • **2N** : 1/8" NPT • **4N** : 1/4" NPT • **6N** : 3/8" NPT • **8N** : 1/2" NPT • **12N** : 3/4" NPT • **16N** : 1" NPT	• **S6** : 316 Stainless Steel

Union

UTU

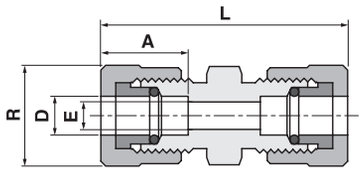

Part No.	Tube O.D D		Dimensions mm			
	in.	mm	E	R	A	L
UTU-1	1/16	1.59	1.3	12.0	10.7	31.2
UTU-2	1/8	3.17	2.3	14.0	12.2	38.0
UTU-4	1/4	6.35	4.6	17.5	14.9	41.9
UTU-6	3/8	9.52	7.1	20.0	17.8	46.5
UTU-8	1/2	12.70	10.2	23.5	20.5	47.0
UTU-10	5/8	15.87	12.7	27.5	22.6	49.3
UTU-12	3/4	19.05	15.7	31.5	25.3	55.1
UTU-16	1	25.40	22.1	39.5	27.6	57.7
UTU-24	1-1/2	38.10	35.1	52.0	27.6	60.7

Union Elbow

UTL

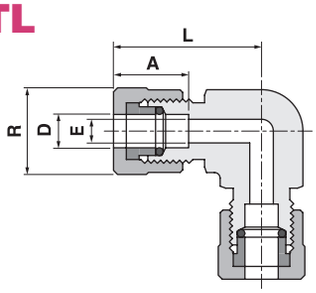

Part No.	Tube O.D D		Dimensions mm			
	in.	mm	E	R	A	L
UTL-4	1/4	6.35	4.6	17.5	14.9	29.2
UTL-6	3/8	9.52	7.1	20.0	17.8	34.8
UTL-8	1/2	12.70	10.2	23.5	20.5	34.8

Union Tee

UTT

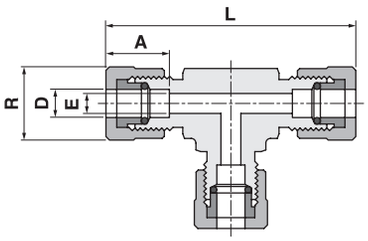

Part No.	Tube O.D D		Dimensions mm				
	in.	mm	E	R	A	I	L
UTT-2	1/8	3.17	2.3	14.0	12.2	26.4	52.8
UTT-4	1/4	6.35	4.6	17.5	14.9	29.0	58.0
UTT-6	3/8	9.52	7.1	20.0	17.8	34.8	69.6
UTT-8	1/2	12.70	10.2	23.5	20.5	34.8	69.6
UTT-12	3/4	19.05	15.7	31.5	25.3	43.3	86.9
UTT-16	1	25.40	22.1	39.5	27.6	47.8	95.5

Reducing Union

UTUR

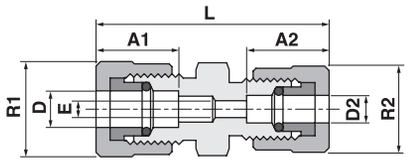

Part No.	Tube O.D D_1		D_2		Dimensions mm					
	in.	mm	in.	mm	E	R_1	R_2	A_1	A_2	L
UTUR-6-4	3/8	9.52	1/4	6.35	4.6	20.0	17.5	17.8	14.9	45.5
UTUR-8-4	1/2	12.70	1/4	6.35	4.6	23.5	17.5	20.5	14.9	48.1

Male Connector

UTMC

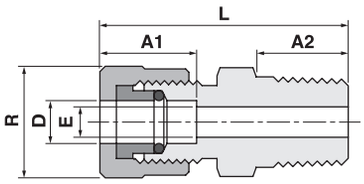

Part No.	Tube O.D D		T	Dimensions mm				
	in.	mm	NPT	E	R	A_1	A_2	L
UTMC-1-2N	1/16	1.59	1/8	1.3	12.0	10.7	10.0	30.4
UTMC-2-2N	1/8	3.17	1/8	2.3	14.0	12.2	10.0	32.6
UTMC-4-2N	1/4	6.35	1/8	4.6	17.5	14.9	10.0	35.6
UTMC-4-4N	1/4	6.35	1/4	4.6	17.5	14.9	14.0	39.1
UTMC-6-2N	3/8	9.52	1/8	4.6	20.0	17.8	10.0	36.8
UTMC-6-4N	3/8	9.52	1/4	7.1	20.0	17.8	14.0	41.4
UTMC-8-6N	1/2	12.70	3/8	10.2	23.5	20.5	15.0	42.2
UTMC-8-8N	1/2	12.70	1/2	10.2	23.5	20.5	19.0	47.0
UTMC-12-12N	3/4	19.05	3/4	15.7	31.5	25.3	19.0	51.3
UTMC-16-16N	1	25.4	1	22.1	39.5	27.6	24.0	57.2

S-Lok Tube Adapter

UTA

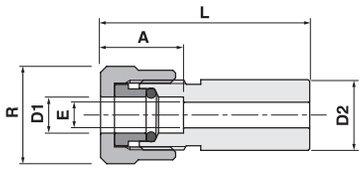

Part No.	Tube O.D				Dimensions mm			
	D_1		D_2					
	in.	mm	in.	mm	E	R	A	L
UTA-1-4	1/16	1.59	1/4	6.35	1.3	12.0	10.7	29.0
UTA-2-4	1/8	3.17	1/4	6.35	2.3	14.0	12.2	31.5
UTA-2-6	1/8	3.17	3/8	9.52	2.3	14.0	12.2	31.8
UTA-4-4	1/4	6.35	1/4	6.35	4.6	17.5	14.9	34.0
UTA-4-6	1/4	6.35	3/8	9.52	4.6	17.5	14.9	34.0
UTA-4-8	1/4	6.35	1/2	12.7	4.6	17.5	14.9	37.6
UTA-6-6	3/8	9.52	3/8	9.52	7.1	20.0	17.8	37.6
UTA-6-8	3/8	9.52	1/2	12.7	7.1	20.0	17.8	40.4
UTA-8-10	1/2	12.7	5/8	15.87	10.2	23.5	20.5	41.7
UTA-8-12	1/2	12.7	3/4	19.05	10.2	23.5	20.5	43.2
UTA-12-16	3/4	19.05	1	25.4	15.7	31.5	25.3	45.7
UTA-16-20	1	25.4	11/4	31.57	22.1	39.5	27.6	45.8
UTA-24-24	11/2	38.1	11/2	38.1	35.1	52.0	27.6	51.8

S-Lok Tube Fitting Connector

UTUS

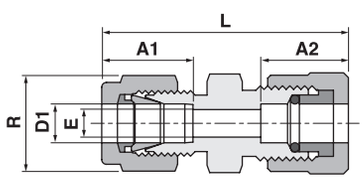

Part No.	Tube O.D		Dimensions mm				
	D						
	in.	mm	E	R	A_1	A_2	L
UTUS-4	1/4	6.35	4.6	17.5	14.9	15.2	42.4
UTUS-6	3/8	9.52	7.1	20.0	17.8	16.9	46.2
UTUS-8	1/2	12.7	10.2	23.5	20.5	22.9	49.8

Nut

UTN

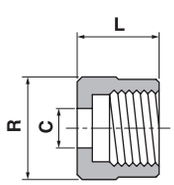

Part No.	Tube O.D		Thread Size	Dimensions mm (in.)		
	D					
	in.	mm		C	R	L
UTN-1	1/16	1.59	1/4-20 UNC	1.7	12.0	10.6
UTN-2	1/8	3.17	3/8-20 UN	3.3	14.0	10.6
UTN-4	1/4	6.35	1/2-20 UNF	6.5	17.5	13.5
UTN-6	3/8	9.52	5/8-20 UN	9.6	20.0	15.5
UTN-8	1/2	12.70	3/4-20 UNEF	12.8	23.5	15.7
UTN-10	5/8	15.87	15/16-20 UNEF	16.0	27.5	15.7
UTN-12	3/4	19.05	11/16-20 UN	19.2	31.5	18.3
UTN-16	1	25.40	13/8-20 UN	25.5	39.5	18.3
UTN-24	11/2	38.10	17/8-20 UN	38.2	52.0	18.3

Forged Fittings

The best partner for value creation
We support the innovations of customers

11

Catalogue No. S-LOK Mar.2024

SOCKET WELDING & THREADED FITTINGS

Pressure Ratings

These fittings shall be designated as pressure class 2000, 3000 And 6000 fittings for threading and pressure class 3000,6000 and 9000 for socket-welding. This designation identifies the fittings with their ratings as shown as follow, Table 1.

Table 1:Correlation of Fittings Class With Schedule Number of Wall Designation of Pipe for Calculation of Ratings.

Pressure Class Designation of Fitting	Type of Fitting	Pipe Used for Rating Basic	
		Schedule No.	Wall Designation
2000 lb	Threaded	80	X-S
3000 lb	Threaded	160	-
6000 lb	Threaded	-	XX-S
3000 lb	Socket-Welding	80	X-S
6000 lb	Socket-Welding	160	-
9000 lb	Socket-Welding	-	XX-S

- This table is not intended to restrict the use of pipe of thinner or thicker wall with fittings.
- Pipe actually used may be thinner or thicker in nominal wall than that shown in Table 1.
- When thinner pipe is used its strength may govern the rating.
- When thicker pipe is used (e.g., for mechanical strength) the strength of the fitting governs the rating.

Table 2 : Nominal wall thickness of Schedule 160 and Double Extra Strong Pipe.

NPS.	Schedule 160		XX-S	
	in	mm	in	mm
1/8	0.124	3.15	0.190	4.83
1/4	0.145	3.68	0.230	6.05
3/8	0.158	4.01	0.252	6.40

Table 3 : Pressure/ Temperature Ratings Non-shock Working Pressure in Pounds per Square Inch

Service Temperature Degree°F	2000lb Threaded Fittings					3000lb Socket Welding and Threaded Fittings					6000lb Socket Welding and Threaded Fittings				
	Carbon steel	F304	F316	F22	F5	Carbon steel	F304	F316	F22	F5	Carbon steel	F304	F316	F22	F5
100	2000	1715	2000	2000	2000	3000	2570	3000	3000	3000	6000	5145	6000	6000	6000
150	1970	1615	1970	1970	1970	2950	2425	2950	2950	2950	5915	4855	5915	5915	5915
200	1940	1520	1940	1940	1940	2915	2280	2915	2915	2915	5830	4565	5830	5830	5830
250	1915	1445	1915	1915	1915	2875	2170	2975	2975	2975	5750	4340	5750	5750	5750
300	1975	1370	1896	1895	1895	2845	2055	2845	2845	2845	5690	4115	5690	5690	5690
350	1875	1310	1875	1875	1875	2810	1965	2810	2810	2810	5625	3930	5690	5625	5625
400	1850	1245	1850	1850	1850	2775	1870	2775	2775	2775	5550	3745	5550	5550	5550
450	1810	1195	1810	1710	1810	2715	1790	2715	2715	2715	5430	3585	5430	5430	5430
500	1735	1140	1735	1635	1735	2605	1715	2605	2605	2605	5210	3430	5210	5210	5210
550	1640	1100	1640	1540	1640	2460	1650	2460	2460	2460	4925	3305	4925	4925	4925
600	1540	1060	1540	1440	1540	2310	1590	2310	2310	2310	4620	3180	4620	4620	4620
650	1430	1020	1430	1330	1430	2150	1535	2150	2150	2150	4300	3070	4300	4300	4300
700	1305	985	1370	1240	1340	1960	1480	2055	2010	2010	3920	2960	4110	4025	4025
750	1180	950	1305	1145	1245	1775	1425	1960	1870	1870	3550	2850	3920	3745	3745
800	1015	915	1240	1055	1155	1525	1370	1865	1735	1735	3050	2745	3730	3470	3470
850	830	880	1180	1060	1060	1250	1330	1770	1595	1595	2500	2660	3540	3190	3190
900	615	860	1115	970	970	925	1290	1675	1455	1455	1885	2580	3350	2915	2915
950	425	845	1055	880	880	640	1270	1580	1320	1320	1295	2540	3165	2640	2640
1000	235	830	990	740	695	350	1250	1485	1115	1240	715	2500	2975	2230	2085

Size Identification

The size of a fitting is identified by the nominal pipe size.
For reducing fittings, the size of the largest run opening is to be given first, followed by the size of the opening opposite of the same run.
The branch size of a Tee is given last.
Where the case is a Cross, the largest side-outlet is thirdly given, then the opening opposite.

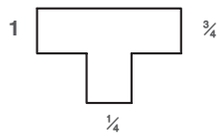

Tee
1 x □ x □

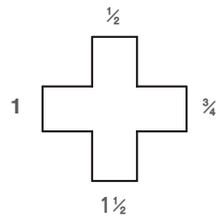

Cross
1½ x ½x1 x ¾

Threads

- Unless otherwise specified in inquiry, all threaded fittings are supplied with NPT threads (ANSI B2.1 American Standard Taper Pipe Thread) for reference, other available threads are:
- ISO/R7, Pipe Threads for Gas List Tubes and Screwed Fittings where Pressure-tight Joints are made on the threads (BS 2.1 & JIS B0203PT Thread).
- API 5B, Line Pipe Threads.
- KSB0222 Taper Pipe Threads

90° Elbow

SWLA

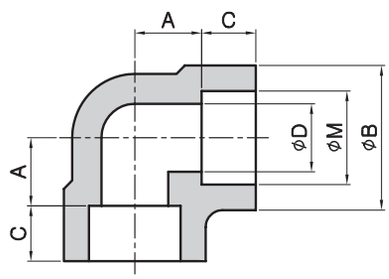

Part No.	Size	M	B	D	A	C	Unit Weight (kg)
3000 lb							
SWLA80-02	¼	See Note (1) To be specified by purchaser	23	9.4	11.1	10	0.132
SWLA80-03	⅜		26.5	12.7	13.4	10	0.113
SWLA80-04	½		34.0	16.1	16.0	13	0.226
SWLA80-06	¾		38.5	21.2	20.0	16	0.312
SWLA80-08	1		46.5	27.0	23.0	16	0.596
SWLA80-10	1¼		56.5	35.4	28.0	18	0.709
SWLA80-12	1½		63.5	41.2	33.0	20	0.850
SWLA80-16	2		76.0	52.7	40.0	22	1.474
SWLA80-20	2½		92.0	62.7	42.0	24	2.460
SWLA80-24	3		110.0	78.0	57.1	31.5	4.650
SWLA80-32	4		146.0	102.0	70.0	45	9.410
6000 lb							
SWLA160-04	½	See Note (1)	38.5	12.0	20.0	16	0.425
SWLA160-06	¾		46.5	15.8	23.0	16	0.652
SWLA160-08	1		56.5	21.0	28.0	18	1.020
SWLA160-10	1¼		63.5	29.7	33.0	20	1.446
SWLA160-12	1½		76.0	34.2	40.0	22	2.380
SWLA160-16	2		92.0	43.1	42.0	24	3.760
SWLA160-20	2½		110.0	54.0	57.1	24	6.120
SWLA160-24	3		121.0	67.7	66.0	31.5	8.760
SWLA160-32	4		152.0	87.0	70.0	45	14.300
9000 lb							
SWLAXXS-04	½	See Note (1)	46.5	6.4	23.0	16	0.510
SWLAXXS-06	¾		56.5	11.0	28.0	16	0.782
SWLAXXS-08	1		63.5	15.2	33.0	18	1.224
SWLAXXS-10	1¼		76.0	22.7	40.0	20	1.807
SWLAXXS-12	1½		92.0	27.9	42.0	22	2.975
SWLAXXS-16	2		110.0	38.1	54.0	24	4.700
SWLAXXS-20	2½		121.0	45.0	66.0	24	10.512
SWLAXXS-24	3		146.0	58.4	70.0	31.5	13.020

45° Elbow

SWLB

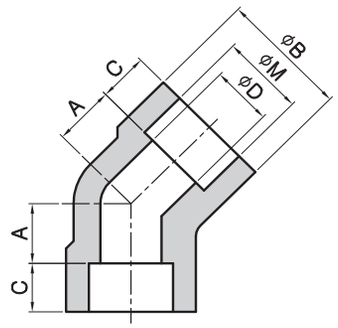

Part No.	Size	M	B	D	A	C	Unit Weight (kg)
3000 lb							
SWLB80-02	¼	See Note (1) To be specified by purchaser	23	9.4	7.9	10	0.093
SWLB80-03	⅜		26.5	12.7	7.9	10	0.142
SWLB80-04	½		34.0	16.1	13.0	13	0.264
SWLB80-06	¾		38.5	21.2	13.0	14	0.397
SWLB80-08	1		46.5	27.0	14.0	16	0.624
SWLB80-10	1¼		56.5	35.4	18.0	18	0.907
SWLB80-12	1½		63.5	41.2	22.0	20	0.782
SWLB80-16	2		76.0	52.7	24.0	22	1.265
SWLB80-20	2½		92.0	62.7	29.0	24	3.062
SWLB80-24	3		110.0	78.0	34.0	31.5	4.763
SWLB80-32	4		146.0	102.0	42.0	45	8.250
6000 lb							
SWLB160-04	½	See Note (1)	38.5	12.0	13	16	0.397
SWLB160-06	¾		46.5	15.8	14	16	0.595
SWLB160-08	1		56.5	21.0	22	18	0.935
SWLB160-10	1 ¼		63.5	29.7	22	20	1.157
SWLB160-12	1½		76.0	34.2	24	22	1.982
SWLB160-16	2		92.0	43.1	29	24	4.000
SWLB160-20	2½		110.0	54.0	34	24	5.875
SWLB160-24	3		121.0	67.7	34	31.5	6.509
SWLB160-32	4		152.0	87.0	42	45	12.360
9000 lb							
SWLBXXS-04	½	See Note (1)	46.5	6.4	14	16	0.875
SWLBXXS-06	¾		56.5	11.0	22	16	1.369
SWLBXXS-08	1		63.5	15.2	22	18	1.725
SWLBXXS-10	1¼		76.0	22.7	24	20	2.931
SWLBXXS-12	1½		92.0	27.9	29	22	5.062
SWLBXXS-16	2		110.0	38.1	34	24	6.400
SWLBXXS-20	2½		121.0	45.0	34	24	7.925
SWLBXXS-24	3		146.0	58.4	42	31.5	11.569

(1) For the 'Bore'(M) other them standard pipe outside diameter.
-Dimensions are in millimeters.
-Dimensional Tolerances See ANSI B16.11 or JIS B2316

Tee

SWTA

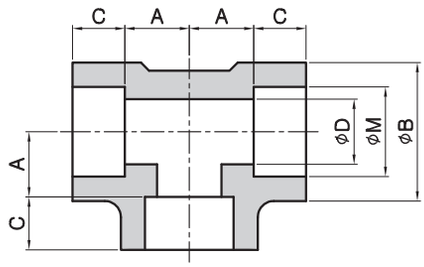

Part No.	Size	M	B	D	A	C	Unit Weight (kg)
3000 lb							
SWTA80-02	¼	See Note (1) To be specified by purchaser	23	9.4	11.1	10	0.161
SWTA80-03	⅜		26.5	12.7	13.4	10	0.142
SWTA80-04	½		34.0	16.1	16.0	13	0.170
SWTA80-06	¾		38.5	21.2	20.0	16	0.397
SWTA80-08	1		46.5	27.0	23.0	16	0.624
SWTA80-10	1¼		56.5	35.4	28.0	18	0.907
SWTA80-12	1½		63.5	41.2	33.0	20	1.134
SWTA80-16	2		76.0	52.7	40.0	22	1.701
SWTA80-20	2½		92.0	62.7	42.0	24	3.424
SWTA80-24	3		110.0	78.0	57.1	31.5	5.670
SWTA80-32	4		146.0	102.0	70.0	45	12.247
6000 lb							
SWTA160-04	½	See Note (1)	38.5	12.0	20.0	16	0.623
SWTA160-06	¾		46.5	15.8	23.0	16	0.907
SWTA160-08	1		56.5	21.0	28.0	18	1.503
SWTA160-10	1¼		63.5	29.7	33.0	20	1.701
SWTA160-12	1½		76.0	34.2	40.0	22	2.948
SWTA160-16	2		92.0	43.1	42.0	24	3.702
SWTA160-20	2½		110.0	54.0	57.1	24	8.723
SWTA160-24	3		121.0	67.7	66.0	31.5	10.660
SWTA160-32	4		152.0	87.0	70.0	45	19.020
9000 lb							
SWTAXXS-04	½	See Note (1)	46.5	6.4	23.0	16	0.779
SWTAXXS-06	¾		56.5	11.0	28.0	16	1.333
SWTAXXS-08	1		63.5	15.2	33.0	18	1.879
SWTAXXS-10	1¼		76.0	22.7	40.0	20	2.126
SWTAXXS-12	1½		92.0	27.9	42.0	22	3.685
SWTAXXS-16	2		110.0	38.1	54.0	24	4.627
SWTAXXS-20	2½		121.0	45.0	66.0	24	10.903
SWTAXXS-24	3		146.0	58.4	70.0	31.5	13.325

(1) For the 'Bore'(M) other them standard pipe outside diameter.
-Dimensions are in millimeters.
-Dimensional Tolerances See ANSI B16.11 or JIS B2316

Cross

SWXA

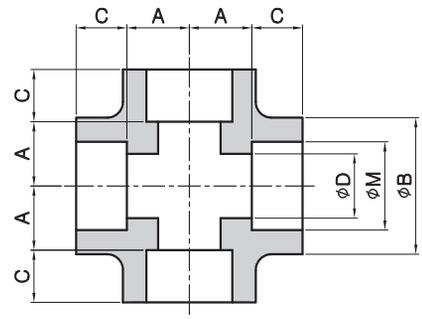

Part No.	Size	M	B	D	A	C	Unit Weight (kg)
3000 lb							
SWXA80-02	¼	See Note (1) To be specified by purchaser	23	9.4	9.4	10	0.182
SWXA80-03	⅜		26.5	12.7	12.7	10	0.170
SWXA80-04	½		34.0	16.1	16.1	13	0.368
SWXA80-06	¾		38.5	21.2	21.2	16	0.519
SWXA80-08	1		46.5	27.0	27.0	16	0.680
SWXA80-10	1¼		56.5	35.4	35.4	18	1.020
SWXA80-12	1½		63.5	41.2	41.2	20	1.389
SWXA80-16	2		76.0	52.7	52.7	22	2.326
SWXA80-20	2½		92.0	62.7	62.7	24	7.484
SWXA80-24	3		110.0	78.0	78.0	31.5	10.432
SWXA80-32	4		146.0	102.0	102.0	45	18.144
6000 lb							
SWXA160-04	½	See Note (1)	38.5	12.0	20.0	16	0.660
SWXA160-06	¾		46.5	15.8	23.0	16	1.120
SWXA160-08	1		56.5	21.0	28.0	18	1.730
SWXA160-10	1¼		63.5	29.7	33.0	20	2.381
SWXA160-12	1½		76.0	34.2	40.0	22	3.750
SWXA160-16	2		92.0	43.1	42.0	24	7.860
SWXA160-20	2½		110.0	54.0	57.1	24	10.600
SWXA160-24	3		121.0	67.7	66.0	31.5	13.600
SWXA160-32	4		152.0	87.0	70.0	45	26.000
9000 lb							
SWXAXXS-04	½	See Note (1)	46.5	6.4	23.0	16	1.615
SWXAXXS-06	¾		56.5	11.0	28.0	16	2.113
SWXAXXS-08	1		63.5	15.2	33.0	18	3.896
SWXAXXS-10	1¼		76.0	22.7	40.0	20	6.298
SWXAXXS-12	1½		92.0	27.9	42.0	22	9.280
SWXAXXS-16	2		110.0	38.1	54.0	24	18.741
SWXAXXS-20	2½		121.0	45.0	66.0	24	25.702
SWXAXXS-24	3		146.0	58.4	70.0	31.5	33.761

Full Coupllong

SWFC

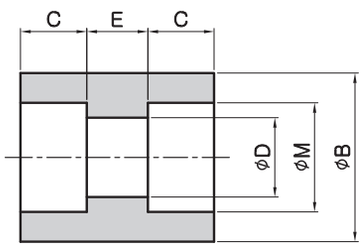

Part No.	Size	M	B	D	C	E	Unit Weight (kg)
3000 lb							
SWFC80-02	¼	See Note (1) To be specified by purchaser	22.0	9.4	10	6.4	0.05
SWFC80-03	⅜		26.0	12.7	10	6.4	0.12
SWFC80-04	½		32.0	16.1	10	9.6	0.12
SWFC80-06	¾		38.0	21.2	13	9.6	0.18
SWFC80-08	1		46.0	27.0	13	12.7	0.26
SWFC80-10	1¼		55.0	35.4	13	12.7	0.35
SWFC80-12	1½		63.0	41.2	13	12.7	0.47
SWFC80-16	2		75.0	52.7	16	19.1	0.81
SWFC80-20	2½		95.0	65.3	16	19.1	1.25
SWFC80-24	3		110.0	78.0	16	19.1	1.53
SWFC80-32	4		140.0	102.0	19	19.1	2.91
6000 lb							
SWFC160-04	½	See Note (1)	35.0	12.0	10	9.6	0.170
SWFC160-06	¾		42.0	15.8	13	9.6	0.249
SWFC160-08	1		50.0	21.0	13	12.7	0.420
SWFC160-10	1¼		60.0	29.7	13	12.7	0.525
SWFC160-12	1½		68.0	34.2	13	12.7	0.665
SWFC160-16	2		85.0	43.1	16	19.1	1.240
SWFC160-20	2½		100.0	54.0	16	19.1	1.640
SWFC160-24	3		114.3	67.7	16	19.1	2.746
SWFC160-32	4		160.0	87.0	19	19.1	4.679
9000 lb							
SWFCXXS-04	½	See Note (1)	42.0	6.4	10	9.6	0.270
SWFCXXS-06	¾		48.0	11.0	13	9.6	0.327
SWFCXXS-08	1		60.0	15.2	13	12.7	0.518
SWFCXXS-10	1¼		70.0	22.7	13	12.7	0.813
SWFCXXS-12	1½		75.0	27.9	13	12.7	0.940
SWFCXXS-16	2		90.0	38.1	16	19.1	1.553
SWFCXXS-20	2½		110.0	45.0	16	19.1	2.430
SWFCXXS-24	3		130.0	58.4	16	19.1	3.721
SWFCXXS-32	4		160.0	80.3	19	19.1	5.137

-Note
(1) For the 'Bore'(M) other them standard pipe outside diameter.
-Dimensions are in millimeters.
-Dimensional Tolerances See ANSI B16.11 or JIS B2316

Half Coupling

SWHC

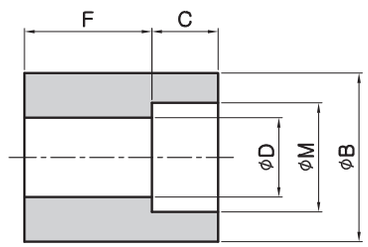

Part No.	Size	M	B	D	C	F	Unit Weight (kg)
3000 lb							
SWHC80-02	¼	See Note (1) To be specified by purchaser	22.0	9.4	10	15.7	0.058
SWHC80-03	⅜		26.0	12.7	10	17.5	0.073
SWHC80-04	½		32.0	16.1	10	22.4	0.138
SWHC80-06	¾		38.0	21.2	13	23.9	0.203
SWHC80-08	1		46.0	27.0	13	28.4	0.313
SWHC80-10	1¼		55.0	35.4	13	30.2	0.431
SWHC80-12	1½		63.0	41.2	13	31.8	0.593
SWHC80-16	2		75.0	52.7	16	41.1	1.280
SWHC80-20	2½		95.0	62.7	16	42.9	1.490
SWHC80-24	3		110.0	78.0	16	44.5	2.202
SWHC80-32	4		140.0	102.0	19	47.7	4.250
6000 lb							
SWHC160-04	½	See Note (1)	35.0	12.0	10	22.4	0.193
SWHC160-06	¾		42.0	15.8	13	23.9	0.284
SWHC160-08	1		50.0	21.0	13	28.4	0.488
SWHC160-10	1¼		60.0	29.7	13	30.2	0.583
SWHC160-12	1½		68.0	34.2	13	31.8	0.640
SWHC160-16	2		85.0	43.1	16	41.1	1.726
SWHC160-20	2½		100.0	54.0	16	42.9	2.247
SWHC160-24	3		114.3	67.7	16	44.5	3.412
SWHC160-32	4		160.0	87.0	19	47.7	5.730
9000 lb							
SWHCXXS-04	½	See Note (1)	46.5	6.4	14	16	0.875
SWHCXXS-06	¾		56.5	11.0	22	16	1.369
SWHCXXS-08	1		63.5	15.2	22	18	1.725
SWHCXXS-10	1¼		76.0	22.7	24	20	2.931
SWHCXXS-12	1½		92.0	27.9	29	22	5.062
SWHCXXS-16	2		110.0	38.1	34	24	6.400
SWHCXXS-20	2½		121.0	45.0	34	24	7.925
SWHCXXS-24	3		146.0	58.4	42	31.5	11.569
SWHCXXS-32	4		160.0	160.0	19	47.7	7.610

Caps

SWCA

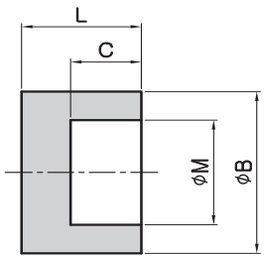

Part No.	Size	M	B	C	L	Unit Weight (kg)
3000 lb						
SWCA80-02	¼	See Note (1) To be specified by purchaser	22.0	10	20	0.048
SWCA80-03	⅜		26.0	10	20	0.076
SWCA80-04	½		32.0	10	20	0.100
SWCA80-06	¾		38.0	13	25	0.182
SWCA80-08	1		46.0	13	27	0.241
SWCA80-10	1¼		55.0	13	30	0.350
SWCA80-12	1½		63.0	13	30	0.612
SWCA80-16	2		75.0	16	36	0.880
SWCA80-20	2½		95.0	16	42	1.520
SWCA80-24	3		110.0	16	46	2.208
SWCA80-32	4		140.0	19	55	4.417
6000 lb						
SWCA160-04	½	See Note (1)	35.0	10	26	0.055
SWCA160-06	¾		42.0	13	27	0.223
SWCA160-08	1		50.0	13	30	0.382
SWCA160-10	1¼		60.0	13	35	0.511
SWCA160-12	1½		68.0	13	36	0.735
SWCA160-16	2		85.0	16	39	1.289
SWCA160-20	2½		100.0	16	45	2.056
SWCA160-24	3		114.3	16	52	3.364
9000 lb						
SWCAXXS-04	½	See Note (1)	42.0	10	30	0.262
SWCAXXS-06	¾		48.0	13	30	0.320
SWCAXXS-08	1		60.0	13	33	0.520
SWCAXXS-10	1¼		70.0	13	40	1.256
SWCAXXS-12	1½		75.0	13	40	1.440
SWCAXXS-16	2		90.0	16	43	1.686
SWCAXXS-20	2½		110.0	16	50	2.986
SWCAXXS-24	3		130.0	16	58	4.666

Boss

SWBA

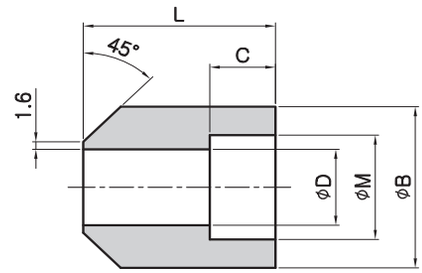

Part No.	Size	M	B	D	C	L	Unit Weight (kg)
3000 lb							
SWBA80-02	¼	See Note (1) To be specified by purchaser	22.0	9.4	10	30	0.09
SWBA80-03	⅜		26.0	12.7	10	30	0.14
SWBA80-04	½		32.0	16.1	10	33	0.24
SWBA80-06	¾		38.0	21.2	13	35	0.28
SWBA80-08	1		46.0	27.0	13	43	0.41
SWBA80-10	1¼		55.0	35.4	13	46	0.44
SWBA80-12	1½		63.0	41.2	13	50	0.63
SWBA80-16	2		75.0	52.7	16	57	1.09
6000 lb							
SWBA160-04	½	See Note (1)	35.0	12.0	10	33	0.45
SWBA160-06	¾		42.0	15.8	13	35	0.52
SWBA160-08	1		50.0	21.0	13	43	0.73
SWBA160-10	1¼		60.0	29.7	13	46	0.77
SWBA160-12	1½		68.0	34.2	13	50	0.12
SWBA160-16	2		85.0	43.1	16	57	1.82

-Note
(1) For the 'Bore'(M) other them standard pipe outside diameter.
-Dimensions are in millimeters.
-Dimensional Tolerances See ANSI B16.11 or JIS B2316

R.J Union

SWUA

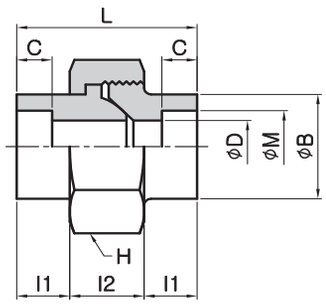

Part No.	Size	M	B	ℓ_1	ℓ_2	L	C	D	H	Unit Weight (kg)
3000 lb										
SWUA80-02	¼	See Note (1) To be specified by purchaser	21.0	11.5	18	41	10.0	9.4	35HEX	0.187
SWUA80-03	⅜		25.0	14.0	18	46	10.0	12.7	40HEX	0.245
SWUA80-04	½		32.0	15.0	21	51	10.0	16.1	46HEX	0.430
SWUA80-06	¾		40.0	17.0	23	57	13.0	21.2	58HEX	0.620
SWUA80-08	1		48.0	19.5	25	64	13.0	27.0	65HEX	1.030
SWUA80-10	1¼		55.0	22.5	27	72	13.0	35.4	76OCT	1.150
SWUA80-12	1½		63.5	24.0	30	78	13.0	41.2	83OCT	1.530
SWUA80-16	2		76.0	26.0	36	88	16.0	52.7	103OCT	3.050
SWUA80-20	2½		95.0	34.0	42	110	18.0	62.7	124OCT	5.140
SWUA80-24	3		116.0	37.5	45	120	22.5	78.0	142OCT	7.120
SWUA80-32	4		148.0	45.0	50	140	25.0	102.0	176OCT	12.400
6000 lb										
SWUA160-04	½	See Note (1)	40.0	17.0	23	57	13	12.0	56HEX	0.62
SWUA160-06	¾		44.5	19.5	25	64	13	15.8	65HEX	0.94
SWUA160-08	1		51.0	22.5	27	72	13	21.0	74OCT	1.98
SWUA160-10	1¼		57.2	24.0	30	78	16	29.7	83OCT	1.41
SWUA160-12	1½		71.5	26.0	36	88	16	34.2	103OCT	2.75
SWUA160-16	2		90.0	34.0	42	110	16	43.1	124OCT	5.05
SWUA160-20	2½		105.0	35.0	45	120	18	54.0	150OCT	6.87
SWUA160-24	3		125.0	45.0	50	140	22	67.7	176OCT	10.85

O-Ring Union

SWUAO

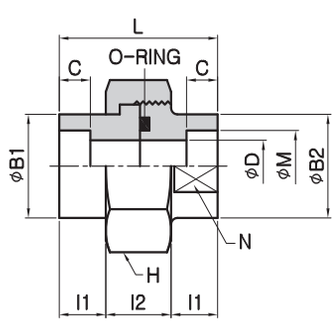

Part No.	Size	M	B1	B2	D	C	ℓ_1	ℓ_2	L	N	H	O-Ring	Unit Weight (kg)
3000 lb													
SWUAO80-02	¼	See Note (1) To be specified by purchaser	22	24	10	10	10	18	38	21	35HEX	P18	0.160
SWUAO80-03	⅜		27	30	12	10	10	18	38	26	41HEX	P20	0.228
SWUAO80-04	½		32	35	16	10	12	20	44	32	46HEX	G25	0.328
SWUAO80-06	¾		38	42	20	13	12	26	50	38	54HEX	G30	0.535
SWUAO80-08	1		47	52	25	13	15	26	56	46	63HEX	G35	0.786
SWUAO80-10	1¼		56	60	32	13	15	30	60	54	77HEX	G45	1.104
SWUAO80-12	1½		63	68	38	13	18	36	72	63	80OCT	G50	1.542
SWUAO80-16	2		76	82	48	17	18	36	72	77	95OCT	G65	2.080

(1) For the 'Bore'(M) other them standard pipe outside diameter.
-Dimensions are in millimeters.
-Dimensional Tolerances See ANSI B16.11 or JIS B2316

Male Connector

SWMC-R

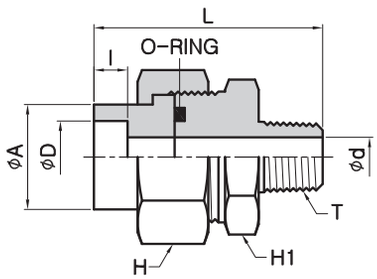

Part No.	Size	D	ℓ	d	A	L	H		H_1		T (PT)	O-Ring
SWMC02-02R	¼	14.3	10	7	22	54	HEX	36	HEX	30	¼	P18
SWMC02-03R	¼	14.3	10	9	22	55	HEX	36	HEX	30	⅜	P18
SWMC03-03R	⅜	17.8	10	9	27	56	HEX	41	HEX	36	⅜	P20
SWMC03-04R	⅜	17.8	10	12	27	56	HEX	41	HEX	36	½	P20
SWMC04-04R	½	22.2	10	12	32	60	HEX	46	HEX	41	½	G25
SWMC04-06R	½	22.2	10	16	32	66	HEX	46	HEX	41	¾	G25
SWMC06-06R	¾	27.7	13	16	37	72	HEX	55	HEX	46	¾	G30
SWMC06-08R	¾	27.7	13	20	37	75	HEX	55	HEX	46	1	G30
SWMC08-08R	1	34.5	13	20	44	82	HEX	60	HEX	55	1	G35
SWMC08-10R	1	34.5	13	25	44	84	HEX	60	HEX	55	1¼	G35
SWMC10-10R	1¼	43.2	13	25	54	90	OCT	75	OCT	65	1¼	G45
SWMC10-12R	1¼	43.2	13	32	54	91	OCT	75	OCT	65	1½	G45
SWMC12-12R	1½	49.1	13	32	63	99	OCT	85	OCT	75	1½	G50
SWMC12-16R	1½	49.1	13	38	63	103	OCT	85	OCT	75	2	G50
SWMC16-16R	2	61.1	16	38	76	103	OCT	100	OCT	90	2	G65

Male Connector

SWMC-G

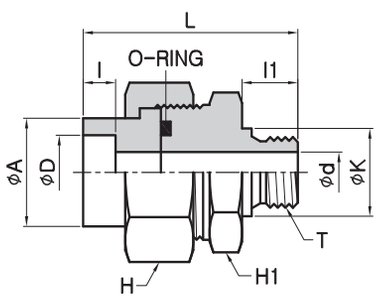

Part No.	Size	D	ℓ	$ℓ_1$	d	A	L	K	H		H_1		T (PF)	O-Ring
SWMC02-02G	¼	14.3	10	12	7	22	54	18	HEX	36	HEX	30	¼	P18
SWMC02-03G	¼	14.3	10	12	9	22	55	21.5	HEX	36	HEX	30	⅜	P18
SWMC03-03G	⅜	17.8	10	12	9	27	56	21.5	HEX	41	HEX	36	⅜	P20
SWMC03-04G	⅜	17.8	10	14	12	27	56	25.5	HEX	41	HEX	36	½	P20
SWMC04-04G	½	22.2	10	14	12	32	60	25.5	HEX	46	HEX	41	½	G25
SWMC04-06G	½	22.2	10	16	16	32	66	31.5	HEX	46	HEX	41	¾	G25
SWMC06-06G	¾	27.7	13	16	16	37	72	31.5	HEX	55	HEX	46	¾	G30
SWMC06-08G	¾	27.7	13	18	20	37	75	38	HEX	55	HEX	46	1	G30
SWMC08-08G	1	34.5	13	18	20	44	82	38	HEX	60	HEX	55	1	G35
SWMC08-10G	1	34.5	13	20	25	44	84	48.5	HEX	60	HEX	55	1¼	G35
SWMC10-10G	1¼	43.2	13	20	25	54	90	48.5	OCT	75	OCT	65	1¼	G45
SWMC10-12G	1¼	43.2	13	22	32	54	91	53.5	OCT	75	OCT	65	1½	G45
SWMC12-12G	1½	49.1	13	22	32	63	99	53.5	OCT	85	OCT	75	1½	G50
SWMC12-16G	1½	49.1	13	24	38	63	103	66	OCT	85	OCT	75	2	G50
SWMC16-16G	2	61.1	16	24	38	76	103	66	OCT	100	OCT	90	2	G65

Reducing Insert

SWRM

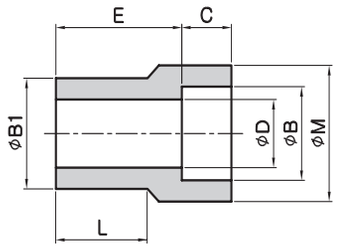

Type-1

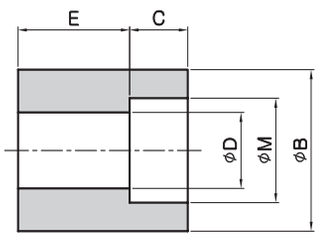

Type-2

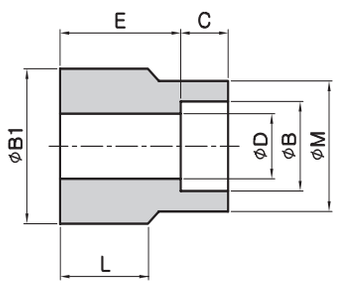

Type-3

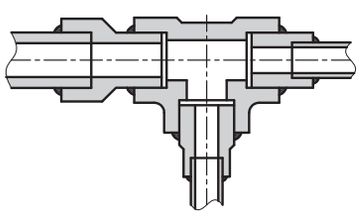

Application of Reducing Insert

Part No.	Size		Type	M	B	B_1	C(Min.)	E	L	D	Unit Weight (kg)
3000 lb											
SWRM0302-S80	⅜	¼	1	22.2	See Note (1) To be specified by purchaser	See Note (1) To be specified by purchaser	9.6	21	16	9.4	0.051
SWRM0402-S80	½	¼	2	-			9.6	15	-	9.4	0.052
SWRM0403-S80	½	⅜	1	25.4			9.6	24	20	12.7	0.086
SWRM0602-S80	¾	¼	3	-			9.6	19	7	9.4	0.109
SWRM0603-S80	¾	⅜	2	-			9.6	19	-	12.7	0.697
SWRM0604-S80	¾	½	1	31.8			9.6	26	22	16.1	0.146
SWRM0803-S80	1	⅜	3	25.4			9.6	22	7	12.7	0.161
SWRM0804-S80	1	½	2	-			9.6	22	-	16.1	0.183
SWRM0806-S80	1	¾	1	38.1			12.7	29	23	21.4	0.208
SWRM1004-S80	1¼	1	3	31.8			9.6	24	7	16.1	0.273
SWRM1006-S80	1¼	¾	2	-			12.7	24	-	21.4	0.286
SWRM1008-S80	1¼	½	1	46.0			12.7	32	24.5	27.2	0.436
SWRM1206-S80	1½	¾	3	38.1			12.7	26	8	21.4	0.348
SWRM1208-S80	1½	1	2	-			12.7	26	-	27.2	0.384
SWRM1210-S80	1½	1¼	1	55.0			12.7	35	27	35.5	0.463
SWRM1208-S80	1½	1	3	46.0			12.7	29	8	27.2	0.615
SWRM1610-S80	2	1¼	2	-			12.7	29	-	35.5	0.647
SWRM1612-S80	2	1½	1	65.0			12.7	37	29	41.2	0.661
SWRM2010-S80	2½	1¼	3	55.0			12.7	35	8	35.5	1.183
SWRM2012-S80	2½	1½	3	65.0			12.7	35	8	41.2	1.107
SWRM2016-S80	2½	2	1	76.0			15.9	39	30	52.7	1.200
SWRM2412-S80	3	1½	3	65.0			12.7	39	8	41.2	1.715
SWRM2416-S80	3	2	3	75.0			15.9	39	10	52.7	1.542
SWRM2420-S80	3	2½	1	95.0			15.9	51	33.5	65.9	1.825
6000 lb											
SWRM0302-S160	⅜	¼	1	38.1	See Note (1)	See Note (1)	12.3	23	12.3	12.3	0.316
SWRM0402-S160	½	¼	1	38.1			12.3	24	12.3	12.3	0.354
SWRM0403-S160	½	⅜	1	46.0			16.2	26	16.2	16.2	0.526
SWRM0602-S160	¾	¼	2	-			12.3	-	12.3	12.3	0.415
SWRM0603-S160	¾	⅜	1	46.0			16.2	28	16.2	16.2	0.557
SWRM0604-S160	¾	½	1	55.0			21.2	28	21.2	21.2	0.765
SWRM0803-S160	1	⅜	2	-			16.2	-	16.2	16.2	0.619
SWRM0804-S160	1	½	1	55.0			21.2	28	21.2	21.2	0.723
SWRM0806-S160	1	⅜	1	62.0			29.9	32	29.9	29.9	0.957
SWRM1004-S160	1¼	½	3	-			21.2	8	21.2	21.2	1.026
SWRM1006-S160	1¼	¾	1	62.0			29.9	34	29.9	29.9	1.137
SWRM1008-S160	1¼	1	1	75.0			34.4	34	34.4	34.4	0.911
SWRM1206-S160	1½	¾	3	62.0			29.9	8	29.9	29.9	1.478
SWRM1208-S160	1½	1	2	-			34.4	-	34.4	34.4	1.881
SWRM1210-S160	1½	1¼	1	95.0			43.1	36	43.1	43.1	2.918
SWRM1208-S160	1½	1	3	75.0			34.4	8	34.4	34.4	2.370
SWRM1610-S160	2	1¼	2	95.0			43.1	-	43.1	43.1	3.313
SWRM1612-S160	2	1½	1	110.0			57.3	38	57.3	57.3	3.562

(1) For the 'Bore'(M) other them standard pipe outside diameter.
-Dimensions are in millimeters. -Dimensional Tolerances See ANSI B16.11 or JIS B2316

Reducing Coupling

SWRC

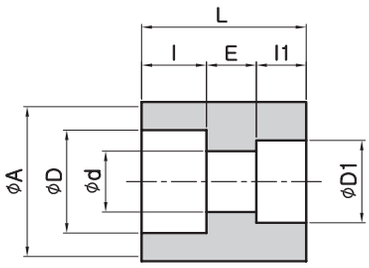

Part No.	Size		D	D_1	ℓ	$ℓ_1$	d	A	E	L
3000 lb										
SWRC0302-S80	⅜	¼	17.8	14.3	10	10	9.4	26	6.4	26.4
SWRC0402-S80	½	¼	22.2	14.3	10	10	9.4	32	9.5	29.5
SWRC0403-S80	½	⅜	22.2	17.8	10	10	12.7	32	9.5	29.5
SWRC0602-S80	¾	¼	27.7	14.3	13	10	9.4	38	9.5	32.5
SWRC0603-S80	¾	⅜	27.7	17.8	13	10	12.7	38	9.5	32.5
SWRC0604-S80	¾	½	27.7	22.2	13	10	16.1	38	9.5	32.5
SWRC0803-S80	1	⅜	34.5	17.8	13	10	12.7	46	12.7	35.7
SWRC0804-S80	1	½	34.5	22.2	13	10	16.1	46	12.7	35.7
SWRC0806-S80	1	¾	34.5	27.2	13	13	21.4	46	12.7	38.7
SWRC1004-S80	1¼	½	43.2	22.2	13	10	16.1	55	12.7	35.7
SWRC1006-S80	1¼	¾	43.2	27.7	13	13	21.4	55	12.7	38.7
SWRC1008-S80	1¼	1	43.2	34.5	13	13	27.2	55	12.7	38.7
SWRC1206-S80	1½	¾	49.1	27.7	13	13	21.4	63	12.7	38.7
SWRC1208-S80	1½	1	49.1	34.5	13	13	27.2	63	12.7	38.7
SWRC1210-S80	1½	1¼	49.1	43.2	13	13	35.5	63	12.7	38.7
SWRC1608-S80	2	1	61.1	34.5	16	13	27.2	75	19.1	48.1
SWRC1610-S80	2	1¼	61.1	43.2	16	13	35.5	75	19.1	48.1
SWRC1612-S80	2	1½	61.1	49.1	16	13	41.2	75	19.1	48.1
6000 lb										
SWRC0604-S160	¾	½	27.7	22.2	13	13	12.3	42	9.5	35.5
SWRC0804-S160	1	½	34.5	22.2	13	13	12.3	50	12.7	38.7
SWRC0806-S160	1	¾	34.5	27.7	13	13	16.2	50	12.7	38.7
SWRC1004-S160	1¼	½	43.2	22.2	13	13	12.3	60	12.7	38.7
SWRC1006-S160	1¼	¾	43.2	27.7	13	13	16.2	60	12.7	38.7
SWRC1008-S160	1¼	1	43.2	34.5	13	13	21.2	60	12.7	38.7
SWRC1206-S160	1½	¾	49.1	27.7	16	13	16.2	68	12.7	41.7
SWRC1208-S160	1½	1	49.1	34.5	16	13	21.2	68	12.7	41.7
SWRC1210-S160	1½	1¼	49.1	43.2	16	13	29.9	68	12.7	41.7
SWRC1608-S160	2	1	61.1	34.5	16	13	21.2	85	19.1	48.1
SWRC1610-S160	2	1¼	61.1	43.2	16	13	29.9	85	19.1	48.1
SWRC1612-S160	2	1½	61.1	49.1	16	16	34.4	85	19.1	51.1

Boss Type R

SWBR

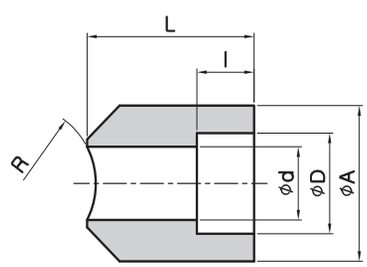

Part No.	Size	D	ℓ	d	A	R	L
3000 lb							
SWBR02-S80	¼	14.3	10	9.4	22	25	30
SWBR03-S80	⅜	17.8	10	12.7	26	25	30
SWBR04-S80	½	22.2	10	16.1	32	30	33
SWBR06-S80	¾	27.7	13	21.4	38	30	35
SWBR08-S80	1	34.5	13	27.2	46	40	43
SWBR10-S80	1¼	43.2	13	35.5	55	45	46
SWBR12-S80	1½	49.1	13	41.2	63	55	50
SWBR16-S80	2	61.1	16	52.7	75	60	57
6000 lb							
SWBR04-S160	½	22.2	13	12.3	35	30	33
SWBR06-S160	¾	27.7	13	16.2	42	30	35
SWBR08-S160	1	34.5	13	21.2	55	40	43
SWBR10-S160	¾	43.2	13	29.9	60	45	46
SWBR12-S160	1	49.1	16	34.4	70	55	50
SWBR16-S160	1¼	61.1	16	43.1	85	60	57

90° Elbow

SLA

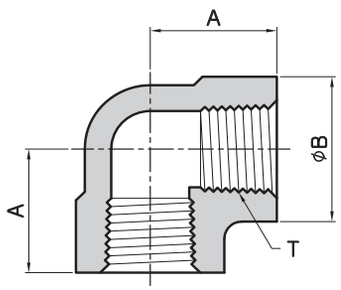

Part No.	Size T	B	A	Unit Weight (kg)
2000 lb				
SLA40-02	¼	23	25.4	0.13
SLA40-03	⅜	26.5	25.4	0.12
SLA40-04	½	34.0	28.5	0.23
SLA40-06	¾	38.5	33.5	0.36
SLA40-08	1	46.5	38.1	0.55
SLA40-10	1¼	56.5	44.5	0.95
SLA40-12	1½	63.5	50.8	1.12
SLA40-16	2	76.0	60.5	1.96
SLA40-20	2½	92.0	76.0	3.25
SLA40-24	3	110.0	86.0	5.64
SLA40-26	3½	121.0	95.5	6.92
SLA40-32	4	146.0	106.5	10.43
3000 lb				
SLA80-02	¼	26.5	25.4	0.120
SLA80-03	⅜	34.0	28.5	0.235
SLA80-04	½	38.5	33.5	0.390
SLA80-06	¾	46.5	38.1	0.570
SLA80-08	1	56.5	44.5	0.990
SLA80-10	1¼	63.5	50.8	1.260
SLA80-12	1½	76.0	60.5	2.125
SLA80-16	2	84.0	64.0	3.520
SLA80-20	2½	110.0	83.0	5.460
SLA80-24	3	121.0	95.5	8.000
SLA80-26	3½	146.0	106.5	11.230
SLA80-32	4	152.0	114.3	13.500
6000 lb				
SLA160-03	⅜	38.5	33.5	0.40
SLA160-04	½	46.5	38.5	0.68
SLA160-06	¾	56.5	44.5	1.13
SLA160-08	1	63.5	50.8	1.59
SLA160-10	1¼	76.0	60.5	2.60
SLA160-12	1½	84.0	64.0	4.32
SLA160-16	2	110.0	85.0	7.33
SLA160-20	2½	121.0	95.5	9.25
SLA160-24	3	146.0	106.5	12.05
SLA160-26	3½	152.0	114.3	14.30
SLA160-32	4	152.0	114.3	14.10

45° Elbow

SLB

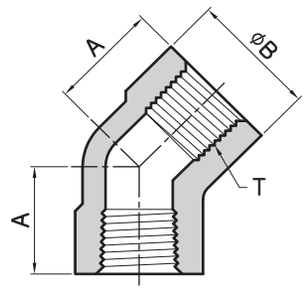

Part No.	Size T	B	A	Unit Weight (kg)
2000 lb				
SLB40-02	¼	23	19.1	0.16
SLB40-03	⅜	26.5	19.1	0.13
SLB40-04	½	34.0	26.0	0.25
SLB40-06	¾	38.5	28.6	0.32
SLB40-08	1	46.5	30.0	0.43
SLB40-10	1¼	56.5	33.3	0.75
SLB40-12	1½	63.5	42.0	1.06
SLB40-16	2	76.0	46.0	1.49
SLB40-20	2½	92.0	53.0	2.45
SLB40-24	3	110.0	64.0	4.00
SLB40-26	3½	121.0	64.0	5.12
SLB40-32	4	146.0	80.0	8.68
3000 lb				
SLB80-02	¼	26.5	19.1	0.16
SLB80-03	⅜	34.0	26.0	0.28
SLB80-04	½	38.5	28.6	0.38
SLB80-06	¾	46.5	30.0	0.51
SLB80-08	1	56.5	33.3	1.03
SLB80-10	1¼	63.5	42.0	1.22
SLB80-12	1½	76.0	46.0	2.36
SLB80-16	2	84.0	53.0	3.66
SLB80-20	2½	110.0	64.0	6.12
SLB80-24	3	121.0	64.0	6.12
SLB80-26	3½	146.0	80.0	8.40
SLB80-32	4	152.0	80.0	11.30
6000 lb				
SLB160-03	⅜	38.5	28.6	0.45
SLB160-04	½	46.5	30.0	0.72
SLB160-06	¾	56.5	33.3	1.00
SLB160-08	1	63.5	42.0	1.56
SLB160-10	1¼	76.0	46.0	2.29
SLB160-12	1½	84.0	53.0	3.80
SLB160-16	2	110.0	64.0	5.76
SLB160-20	2½	121.0	64.0	7.20
SLB160-24	3	146.0	80.0	11.30
SLB160-26	3½	152.0	80.0	13.20
SLB160-32	4	152.0	80.0	11.80

90° Elbow

STA

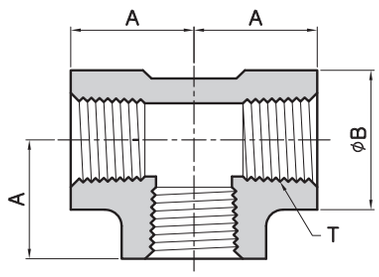

Part No.	Size T	B	A	Unit Weight (kg)
2000 lb				
STA40-02	¼	23	25.4	0.14
STA40-03	⅜	26.5	25.4	0.18
STA40-04	½	34.0	28.5	0.26
STA40-06	¾	38.5	33.5	0.43
STA40-08	1	46.5	38.1	0.65
STA40-10	1¼	56.5	44.5	0.91
STA40-12	1½	63.5	50.8	1.25
STA40-16	2	76.0	60.5	2.10
STA40-20	2½	92.0	76.0	3.94
STA40-24	3	110.0	86.0	5.98
STA40-26	3½	121.0	95.5	7.41
STA40-32	4	146.0	106.5	12.36
3000 lb				
STA80-02	¼	26.5	25.4	0.18
STA80-03	⅜	34.0	28.5	0.32
STA80-04	½	38.5	33.5	0.52
STA80-06	¾	46.5	38.1	0.73
STA80-08	1	56.5	44.5	1.26
STA80-10	1¼	63.5	50.8	1.65
STA80-12	1½	76.0	60.5	2.81
STA80-16	2	84.0	64.0	4.35
STA80-20	2½	110.0	83.0	6.26
STA80-24	3	121.0	95.5	10.05
STA80-26	3½	146.0	106.5	14.62
STA80-32	4	152.0	114.3	16.50
6000 lb				
STA160-03	⅜	38.5	33.5	0.59
STA160-04	½	46.5	38.5	0.96
STA160-06	¾	56.5	44.5	1.50
STA160-08	1	63.5	50.8	2.10
STA160-10	1¼	76.0	60.5	3.30
STA160-12	1½	84.0	64.0	5.72
STA160-16	2	110.0	85.0	9.64
STA160-20	2½	121.0	95.5	13.40
STA160-24	3	146.0	106.5	16.15
STA160-26	3½	152.0	114.3	18.23
STA160-32	4	152.0	114.3	16.70

Cross

SXA

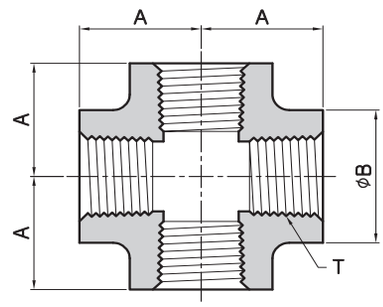

Part No.	Size T	B	A	Unit Weight (kg)
2000 lb				
SXA40-02	¼	23	25.4	0.14
SXA40-03	⅜	26.5	25.4	0.22
SXA40-04	½	34.0	28.5	0.37
SXA40-06	¾	38.5	33.5	0.52
SXA40-08	1	46.5	38.1	0.79
SXA40-10	1¼	56.5	44.5	1.28
SXA40-12	1½	63.5	50.8	1.62
SXA40-16	2	76.0	60.5	2.62
SXA40-20	2½	92.0	76.0	4.66
SXA40-24	3	110.0	86.0	7.10
SXA40-26	3½	121.0	95.5	8.85
SXA40-32	4	146.0	106.5	14.83
3000 lb				
SXA80-02	¼	26.5	25.4	0.23
SXA80-03	⅜	34.0	28.5	0.40
SXA80-04	½	38.5	33.5	0.63
SXA80-06	¾	46.5	38.1	0.93
SXA80-08	1	56.5	44.5	1.47
SXA80-10	1¼	63.5	50.8	1.78
SXA80-12	1½	76.0	60.5	3.42
SXA80-16	2	84.0	64.0	5.50
SXA80-20	2½	110.0	83.0	7.66
SXA80-24	3	121.0	95.5	11.21
SXA80-26	3½	146.0	106.5	16.72
SXA80-32	4	152.0	114.3	19.00
6000 lb				
SXA160-03	⅜	38.5	33.5	0.67
SXA160-04	½	46.5	38.5	1.12
SXA160-06	¾	56.5	44.5	1.90
SXA160-08	1	63.5	50.8	2.90
SXA160-10	1¼	76.0	60.5	4.20
SXA160-12	1½	84.0	64.0	6.65
SXA160-16	2	110.0	85.0	10.00
SXA160-20	2½	121.0	95.5	16.00
SXA160-24	3	146.0	106.5	19.87
SXA160-26	3½	152.0	114.3	28.10
SXA160-32	4	152.0	114.3	24.60

Full Coupling

SFC

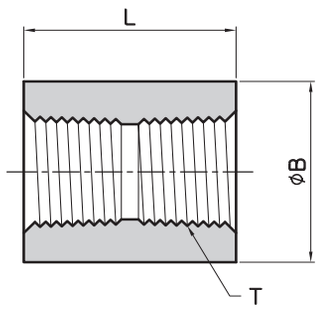

Part No.	Size T	B	L	Unit Weight (kg)
3000 lb				
SFC80-02	¼	22.0	35.1	0.050
SFC80-03	⅜	25.0	38.1	0.061
SFC80-04	½	30.0	48.0	0.142
SFC80-06	¾	35.0	51.0	0.218
SFC80-08	1	45.0	61.0	0.418
SFC80-10	1¼	57.0	67.0	0.720
SFC80-12	1½	63.5	80.0	1.065
SFC80-16	2	76.0	86.0	1.400
SFC80-20	2½	92.0	92.0	2.550
SFC80-24	3	108.0	108.0	3.830
SFC80-26	3½	127.0	114.3	5.720
SFC80-32	4	140.0	121.0	6.350
6000 lb				
SFC160-02	¼	25.0	35.0	0.120
SFC160-03	⅜	32.0	38.0	0.180
SFC160-04	½	38.1	48.0	0.280
SFC160-06	¾	45.0	51.0	0.450
SFC160-08	1	57.0	61.0	0.800
SFC160-10	1¼	63.5	67.0	1.400
SFC160-12	1½	76.0	80.0	1.950
SFC160-16	2	92.0	86.0	2.800
SFC160-20	2½	108.0	92.0	3.800
SFC160-24	3	127.0	108.0	6.010
SFC160-26	3½	140.0	114.3	8.250
SFC160-32	4	160.0	121.0	10.700

Half Coupling

SHC

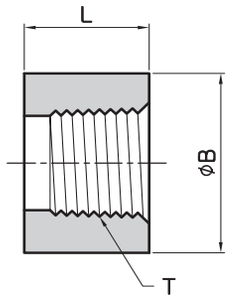

Part No.	Size T	B	L	Unit Weight (kg)
3000 lb				
SHC80-02	¼	22.0	17.5	0.025
SHC80-03	⅜	25.0	19.0	0.030
SHC80-04	½	30.0	24.0	0.070
SHC80-06	¾	35.0	25.5	0.100
SHC80-08	1	45.0	30.5	0.210
SHC80-10	1¼	57.0	33.5	0.365
SHC80-12	1½	63.5	40.0	0.520
SHC80-16	2	76.0	43.0	0.690
SHC80-20	2½	92.0	46.0	1.250
SHC80-24	3	108.0	54.0	1.840
SHC80-26	3½	127.0	57.5	2.860
SHC80-32	4	140.0	60.5	3.510
6000 lb				
SHC160-02	¼	25.0	17.5	0.06
SHC160-03	⅜	32.0	19.0	0.09
SHC160-04	½	38.1	24.0	0.14
SHC160-06	¾	45.0	25.5	0.23
SHC160-08	1	57.0	30.5	0.37
SHC160-10	1¼	63.5	33.5	0.70
SHC160-12	1½	76.0	40.0	0.90
SHC160-16	2	92.0	43.0	1.22
SHC160-20	2½	108.0	46.0	1.85
SHC160-24	3	127.0	54.0	2.95
SHC160-26	3½	140.0	57.5	4.12
SHC160-32	4	160.0	60.5	5.40

CAP

SCA

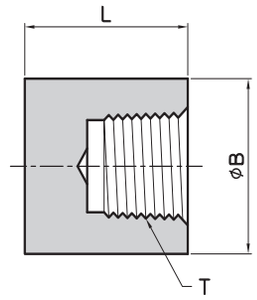

Part No.	Size T	B	L	Unit Weight (kg)
3000 lb				
SCA80-02	¼	22.0	25	0.05
SCA80-03	⅜	25.0	25	0.08
SCA80-04	½	30.0	32	0.12
SCA80-06	¾	35.0	37	0.20
SCA80-08	1	45.0	41	0.31
SCA80-10	1¼	57.0	44	0.60
SCA80-12	1½	63.5	44	0.73
SCA80-16	2	76.0	48	1.05
SCA80-20	2½	92.0	60	2.27
SCA80-24	3	108.0	65	3.83
SCA80-26	3½	127.0	68	4.52
SCA80-32	4	140.0	68	6.35
6000 lb				
SCA160-02	¼	25.0	27	0.09
SCA160-03	⅜	32.0	27	0.14
SCA160-04	½	38.1	33	0.25
SCA160-06	¾	45.0	38	0.36
SCA160-08	1	57.0	43	0.70
SCA160-10	1¼	63.5	46	0.80
SCA160-12	1½	76.0	48	1.28
SCA160-16	2	92.0	51	2.16
SCA160-20	2½	108.0	64	2.72
SCA160-24	3	127.0	68	4.95
SCA160-26	3½	140.0	70	6.84
SCA160-32	4	160.0	75	9.21

Hex Head Pulg

SPB

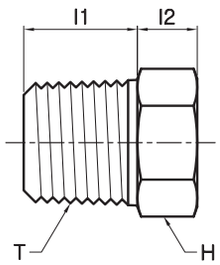

Part No.	Size T	ℓ_1	ℓ_2	H	Unit Weight (kg)
3000 lb					
SPB-01	⅛	11	6.3	11.0	0.03
SPB-02	¼	13	6.3	14.0	0.03
SPB-03	⅜	14	8.0	19.0	0.06
SPB-04	½	18	8.0	22.0	0.08
SPB-06	¾	19	10.0	27.0	0.14
SPB-08	1	21	10.0	35.0	0.22
SPB-10	1¼	22	14.0	46.0	0.51
SPB-12	1½	24	16.0	50.0	0.62
SPB-16	2	25	18.0	63.5	1.02
SPB-20	2½	32	19.0	76.2	1.76
SPB-24	3	40	21.0	99.0	2.66
SPB-26	3½	41	22.0	103.0	3.72
SPB-32	4	42	32.0	117.0	5.90

Squre Pulg

SPD

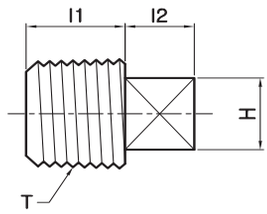

Part No.	Size T	ℓ_1	ℓ_2	H	Unit Weight (kg)
3000 lb					
SPD-01	⅛	9.9	6.6	7.0	0.007
SPD-02	¼	13.0	6.6	9.0	0.014
SPD-03	⅜	13.0	7.9	12.0	0.028
SPD-04	½	15.0	9.9	14.0	0.057
SPD-06	¾	16.0	11.0	17.0	0.085
SPD-08	1	20.1	13.0	19.0	0.140
SPD-10	1¼	21.1	15.0	24.0	0.255
SPD-12	1½	21.1	16.0	27.0	0.397
SPD-16	2	23.1	18.0	32.0	0.680
SPD-20	2½	27.0	20.0	38.1	1.020
SPD-24	3	29.0	21.0	42.9	1.301
SPD-26	3½	30.0	22.2	47.6	2.050
SPD-32	4	32.0	25.0	63.5	3.257

Round Plug

SPE

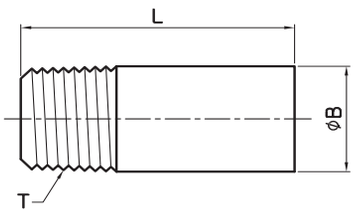

Part No.	Size T	B	L	Unit Weight (kg)
3000 lb				
SPE-01	⅛	10.3	35.0	0.057
SPE-02	¼	13.5	41.3	0.057
SPE-03	⅜	17.5	41.3	0.085
SPE-04	½	21.4	44.5	0.170
SPE-06	¾	27.0	44.5	0.170
SPE-08	1	33.4	50.8	0.340
SPE-10	1¼	42.9	50.8	0.340
SPE-12	1½	48.4	50.8	0.710
SPE-16	2	60.3	63.5	1.361
SPE-20	2½	73.0	70.0	2.155
SPE-24	3	88.9	70.0	3.456
SPE-26	3½	101.6	76.2	4.216
SPE-32	4	114.3	76.2	5.838

Reducing Coupling

SRC

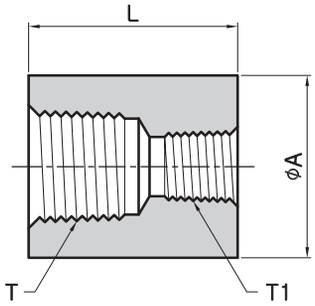

Part No.	T (PT)	T_1 (PT)	A	L
SRC02-01R	¼	⅛	22	35.1
SRC03-02R	⅜	¼	25	38.1
SRC04-02R	½	¼	30	47.8
SRC04-03R	½	⅜	30	47.8
SRC06-02R	¾	¼	35	50.8
SRC06-03R	¾	⅜	35	50.8
SRC06-04R	¾	½	35	50.8
SRC08-03R	1	⅜	45	60.5
SRC08-04R	1	½	45	60.5
SRC08-06R	1	¾	45	60.5
SRC10-04R	1¼	½	60	66.5
SRC10-06R	1¼	¾	60	66.5
SRC10-08R	1¼	1	60	66.5
SRC12-06R	1½	¾	65	79.3
SRC12-08R	1½	1	65	79.3
SRC12-10R	1½	1¼	65	79.3
SRC16-08R	2	1	80	85.9
SRC16-10R	4	1¼	80	85.9

Hex Nipple

SNA

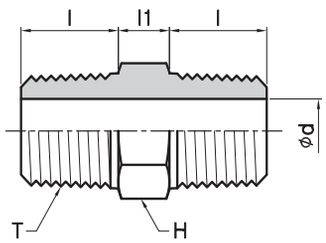

Part No.	T (PT)	d	H	ℓ	ℓ 1
SNA-01R	⅛	4	HEX 12	10	6
SNA-02R	¼	7	HEX 17	14	8
SNA-03R	⅜	9	HEX 19	15	8
SNA-04R	½	12	HEX 22	19	9
SNA-06R	¾	16	HEX 27	21	10
SNA-08R	1	20	HEX 36	24	11
SNA-10R	1¼	28	HEX 46	27	12
SNA-12R	1½	32	HEX 50	27	14
SNA-16R	2	40	HEX 65	31	16

Reducing Nipple

SNR

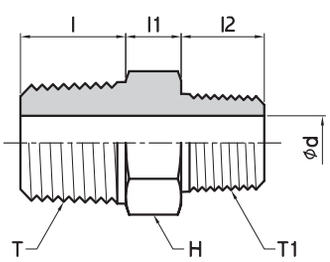

Part No.	T (PT)	x	T1 (PT)	d	H	ℓ	ℓ 1	ℓ 2
SNR02-01R	¼	x	⅛	4	HEX 17	14	8	10
SNR03-02R	⅜	x	¼	7	HEX 19	15	8	14
SNR04-02R	½	x	¼	7	HEX 22	19	9	14
SNR04-03R	½	x	⅜	9	HEX 22	19	9	15
SNR06-02R	¾	x	¼	7	HEX 27	21	10	14
SNR06-03R	¾	x	⅜	9	HEX 27	21	10	15
SNR06-04R	¾	x	½	12	HEX 27	21	10	19
SNR08-03R	1	x	⅜	9	HEX 36	24	11	15
SNR08-04R	1	x	½	12	HEX 36	24	11	19
SNR08-06R	1	x	¾	16	HEX 36	24	11	21
SNR10-04R	1¼	x	½	12	HEX 46	27	12	19
SNR10-06R	1¼	x	¾	16	HEX 46	27	12	21
SNR10-08R	1¼	x	1	20	HEX 46	27	12	24
SNR12-06R	1½	x	¾	16	HEX 50	27	14	21
SNR12-08R	1½	x	1	20	HEX 50	27	14	24
SNR12-10R	1½	x	1¼	28	HEX 50	27	14	27
SNR16-08R	2	x	1	20	HEX 65	31	16	24
SNR16-10R	2	x	1¼	28	HEX 65	31	16	27
SNR16-12R	2	x	1½	32	HEX 65	31	16	27

Reducing Nipple

SSA

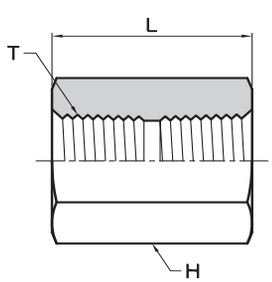

Part No.	T (PT)	H	L
SSA-01R	⅛	HEX 19	30
SSA-02R	¼	HEX 22	30
SSA-03R	⅜	HEX 24	30
SSA-04R	½	HEX 32	40
SSA-06R	¾	HEX 36	42
SSA-08R	1	HEX 46	50
SSA-10R	1¼	HEX 55	55
SSA-12R	1½	HEX 65	55
SSA-16R	2	HEX 75	64

Hex Bushing

SHB

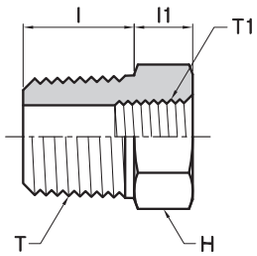

Part No.	T (PT)	x	T1 (PT)	H	ℓ	ℓ 1
SHB02-01R	¼	x	⅛	HEX 17	14	8
SHB03-02R	⅜	x	¼	HEX 19	15	8
SHB04-02R	½	x	¼	HEX 24	19	9
SHB04-03R	½	x	⅜	HEX 24	19	9
SHB06-02R	¾	x	¼	HEX 30	21	10
SHB06-03R	¾	x	⅜	HEX 30	21	10
SHB06-04R	¾	x	½	HEX 30	21	10
SHB08-02R	1	x	¼	HEX 36	24	11
SHB08-03R	1	x	⅜	HEX 36	24	11
SHB08-04R	1	x	½	HEX 36	24	11
SHB08-06R	1	x	¾	HEX 36	24	11
SHB10-04R	1¼	x	½	HEX 46	27	12
SHB10-06R	1¼	x	¾	HEX 46	27	12
SHB10-08R	1¼	x	1	HEX 46	27	12
SHB12-04R	1½	x	½	HEX 50	27	14
SHB12-06R	1½	x	¾	HEX 50	27	14
SHB12-08R	1½	x	1	HEX 50	27	14
SHB12-10R	1½	x	1¼	HEX 50	27	14
SHB16-06R	2	x	¾	HEX 65	31	16
SHB16-08R	2	x	1	HEX 65	31	16
SHB16-10R	2	x	1¼	HEX 65	31	16
SHB16-12R	2	x	1½	HEX 65	31	16

Boss Type A

SBA

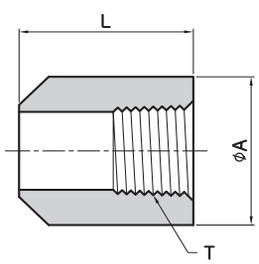

Part No.	T (PT)	A	L
SBA-02R	¼	22	30
SBA-03R	⅜	26	30
SBA-04R	½	32	33
SBA-06R	¾	38	35
SBA-08R	1	46	43
SBA-10R	1¼	55	46
SBA-12R	1½	65	50
SBA-16R	2	75	57

Boss Type R

SBR

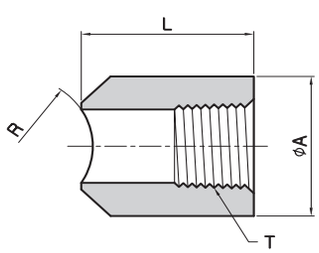

Part No.	T (PT)	A	L	R
SBA-02R	¼	22	30	25
SBA-03R	⅜	26	30	25
SBA-04R	½	32	33	30
SBA-06R	¾	38	35	30
SBA-08R	1	46	43	40
SBA-10R	1¼	55	46	45
SBA-12R	1½	65	50	55
SBA-16R	2	75	57	60

R.J Union

SUA

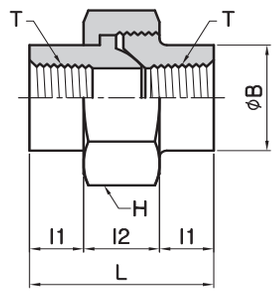

Part No.	Size T	B	ℓ_1	ℓ_2	L	H		Unit Weight (kg)
3000 lb								
SUA80-02	¼	21.0	11.5	18	41	HEX	35	0.19
SUA80-03	⅜	25.0	14.0	18	46	HEX	40	0.25
SUA80-04	½	32.0	15.0	21	51	HEX	46	0.43
SUA80-06	¾	40.0	17.0	23	57	HEX	58	0.62
SUA80-08	1	48.0	19.5	25	64	HEX	65	1.03
SUA80-10	1¼	55.5	22.5	27	72	OCT	76	1.15
SUA80-12	2	63.5	24.0	30	78	OCT	83	1.54
SUA80-16	2	76.0	26.0	36	88	OCT	103	3.05
SUA80-20	2½	95.0	34.0	42	110	OCT	124	5.14
SUA80-24	3	116.0	37.0	45	120	OCT	150	7.12
SUA80-32	4	148.0	45.0	50	140	OCT	180	12.40
6000 lb								
SUA160-02	¼	25.4	13.5	19	46	HEX	40	0.25
SUA160-03	⅜	32.0	15.0	21	51	HEX	46	0.43
SUA160-04	½	40.0	17.0	23	57	HEX	56	0.62
SUA160-06	¾	44.5	19.5	25	64	HEX	65	0.94
SUA160-08	1	51.0	22.5	27	72	OCT	74	1.08
SUA160-10	1¼	57.2	24.0	30	78	OCT	83	1.41
SUA160-12	1½	71.5	26.0	36	88	OCT	103	2.75
SUA160-16	2	90.0	34.0	42	110	OCT	124	5.05
SUA160-20	2½	105.0	37.5	45	120	OCT	150	6.87
SUA160-24	3	125.0	45.0	50	140	OCT	180	10.85

O-Ring Union

SUAO

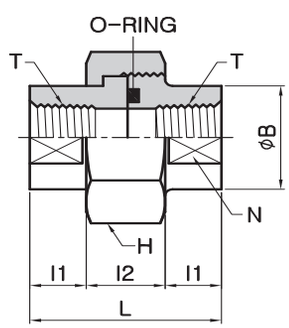

Part No.	Size T	B	ℓ_1	ℓ_2	L	N	H		O-Ring	Unit Weight (kg)
3000 lb										
SUAO80-02	¼	22	10	18	38	21	HEX	35	P18	0.160
SUAO80-03	⅜	27	10	18	38	26	HEX	41	P20	0.215
SUAO80-04	½	32	12	20	44	32	HEX	46	G25	0.312
SUAO80-06	¾	38	12	26	50	38	HEX	54	G30	0.477
SUAO80-08	1	47	15	26	56	46	HEX	63	G35	0.764
SUAO80-10	1¼	56	15	30	60	54	HEX	77	G45	1.106
SUAO80-12	1½	63	18	36	72	63	OCT	80	G50	1.327
SUAO80-16	2	76	18	36	72	77	OCT	95	G65	1.856

Weldolet

SWLT

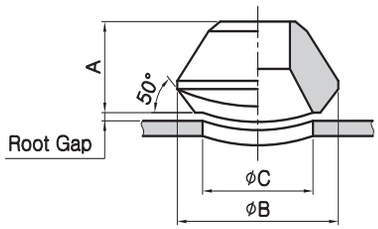

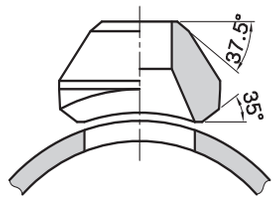

STD, X-S

Outlet Size	A		B		C		APP□Weight(kg)	
	STD	X-S	STD	X-S	STD	X-S	STD	X-S
½	19.1	19.1	34.9	34.9	23.8	23.8	0.08	0.09
¾	22.2	22.2	44.5	44.5	30.2	30.2	0.11	0.14
1	27.0	27.0	54.0	54.0	36.5	36.5	0.23	0.21
1¼	31.8	31.8	65.1	65.1	44.5	44.5	0.36	0.41
1½	33.3	33.3	73.0	73.0	50.8	50.8	0.45	0.50
2	38.1	38.1	88.9	88.9	65.1	65.1	0.80	0.80
2½	41.3	41.3	103.2	103.2	76.2	76.2	1.14	1.20
3	44.5	44.5	122.2	122.2	93.7	93.7	1.82	1.90
4	50.8	50.8	152.4	152.4	120.7	120.7	2.86	2.90
5	57.2	57.2	179.4	179.4	141.3	141.3	4.66	4.70
6	60.3	77.8	215.9	225.4	169.9	169.9	6.45	10.50
8	69.9	98.5	263.5	292.1	220.7	220.7	10.68	16.80
10	77.8	93.7	322.3	323.9	274.7	265.1	17.73	20.90
12	85.7	103.2	377.8	397.4	325.4	317.5	26.82	27.70
14	88.9	100.0	409.6	431.8	357.2	350.8	30.00	31.80
16	93.7	106.4	463.6	466.7	408.0	403.2	34.10	46.40
18	96.8	111.1	520.7	523.9	458.8	455.6	44.10	59.10
20	101.6	119.1	571.5	582.6	508.0	509.6	53.60	71.80
24	115.9	139.7	689.0	708.0	614.4	638.2	100.00	131.80

Sch 160, XX-S

Outlet Size	A		B		C		APP□Weight(kg)	
	Sch 160	XX-s	Sch 160	XX-s	Sch 160	XX-s	Sch 160	XX-s
½	28.6	28.6	34.9	34.9	14.3	14.3	0.11	-
¾	31.8	31.8	44.5	44.5	19.1	19.1	0.32	-
1	38.1	38.1	50.8	50.8	25.4	25.4	0.38	0.38
1¼	44.5	44.5	61.9	61.9	33.3	33.3	0.57	0.57
1½	50.8	50.8	69.9	69.9	38.1	38.1	0.80	0.80
2	55.6	55.6	81.0	81.0	42.9	42.9	1.00	1.00
2½	61.9	61.9	96.8	96.8	54.0	54.0	1.54	1.54
3	73.0	73.0	120.7	120.7	73.0	73.0	2.90	2.90
4	84.1	84.1	152.4	152.4	98.4	98.4	4.80	4.80
5	93.7	93.7	187.3	187.3	122.2	122.2	6.50	6.50
6	104.8	104.8	220.7	220.7	146.1	146.1	12.70	12.70
8	111.1	111.1	284.2	284.2	173.0	173.0	20.50	20.50
10	125.4	125.4	312.7	312.7	215.9	215.9	38.60	38.60

- Applicable run pipe sizes are from outlet size to 36inch

Sockolet

SCLT

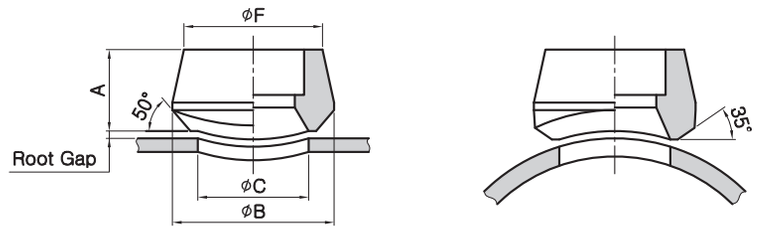

Outlet Size	A		B		C		F		APP□Weight(kg)	
	3000#	6000#	3000#	6000#	3000#	6000#	3000#	6000#	3000#	6000#
½	25.4	31.8	34.9	44.5	23.8	19.1	31.8	39.7	0.14	0.23
¾	27.0	36.5	44.5	50.8	30.2	25.4	36.5	46.6	0.15	0.36
1	33.3	39.7	54.0	61.9	36.5	33.3	46.0	57.2	0.27	0.59
1¼	33.3	41.3	65.1	69.9	44.5	38.1	55.6	65.1	0.39	0.73
1½	34.9	42.9	73.0	82.6	50.8	49.2	61.9	76.2	0.47	0.91
2	38.1	58.7	88.9	103.2	65.1	58.7	74.6	92.1	0.73	2.33
2½	46.0	-	103.2	-	76.2	-	87.3	-	1.25	-
3	50.8	-	122.2	-	93.7	-	104.8	-	1.73	-
4	57.2	-	152.4	-	120.7	-	130.2	-	3.30	-

Threadolet

STLT

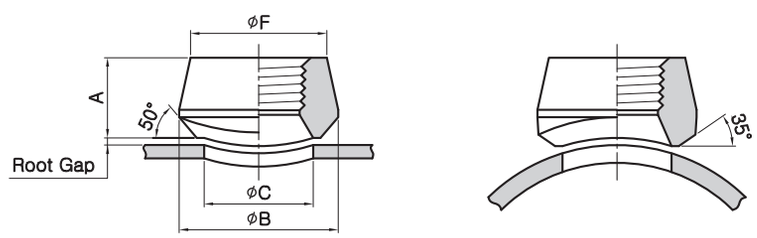

Outlet Size	A		B		C		F		APP□Weight(kg)	
	3000#	6000#	3000#	6000#	3000#	6000#	3000#	6000#	3000#	6000#
½	25.4	31.8	34.9	44.5	23.8	19.1	31.8	39.7	0.11	0.20
¾	27.0	36.5	44.5	50.8	30.2	25.4	36.5	46.6	0.16	0.34
1	33.3	39.7	54.0	61.9	36.5	33.3	46.0	57.2	0.28	0.56
1¼	33.3	41.3	65.1	69.9	44.5	38.1	55.6	65.1	0.41	0.71
1½	34.9	42.9	73.0	82.6	50.8	49.2	61.9	76.2	0.45	0.89
2	38.1	52.4	88.9	103.2	65.1	69.9	74.6	92.1	0.80	2.31
2½	46.0	-	103.2	-	76.2	-	87.3	-	1.36	-
3	50.8	-	122.2	-	93.7	-	104.8	-	1.98	-
4	57.2	-	152.4	-	120.7	-	130.2	-	3.23	-

- Applicable run pipe sizes are from outlet size to 36inch

Nippolet

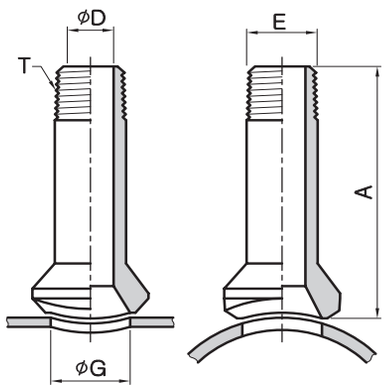

Run Pipe Size	Outlet Size T	A	G	D	E	Unit Weight (kg)
36-¾	½	88.9	23.9	14.0	21.3	0.36
36-1	¾	88.9	30.2	18.8	26.7	0.56
36-1	1	88.9	36.5	24.4	33.3	0.84
36-1	1¼	88.9	44.5	32.5	42.2	1.22
36-2	1½	88.9	50.8	38.1	48.3	2.00
36-2	2	88.9	65.1	49.3	60.5	3.12

Swaged Nipple

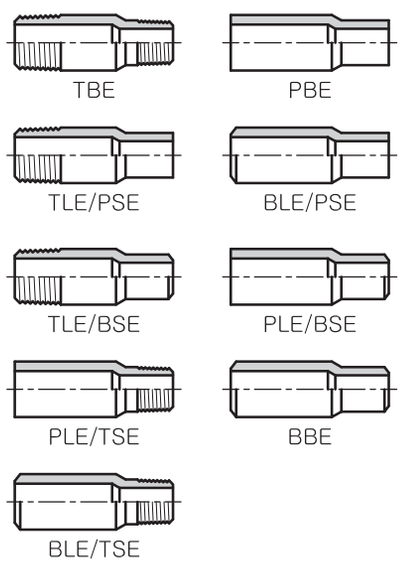

Large end Size	Small end Size	Length(mm)
½	⅜ - ⅛	70
¾	½ - ⅛	76
1	1 - ⅛	89
1¼	1¼ - ⅛	102
1½	1½ - ⅛	114
2	½ - ⅛	165
2½	2 - ⅛	178
3	2½ - ⅛	203
3½	3 - ⅛	203
4	3½ - ⅛	229

TBE: Threaded both end
PBE: Plain both end
PLE/TSE:Plain large end-Threded small end
BLE/TSE:Beveled large end Threaded small end
BLE/PSE:Beveled large end-Plain small end
TLE/PSE:Threaded large end-Plain small-end

Swaged Nipples are made from
Forged Steel or Pipe

1. Forged Socket Welding. Threaded Fitting Bore

in millimeters.

Nominal Pipe Size	ANSI B16.11				JIS B2316		
	Socket Welding(M)		Threaded(T)		Socket Welding(M)	Threaded(T)	
⅛″	10.90,	10.65	NPT	⅛	11.0	PT	⅛
¼″	14.35,	14.10	NPT	¼	14.3	PT	¼
⅜″	17.80,	17.55	NPT	⅜	17.8	PT	⅜
½″	21.95,	21.70	NPT	½	22.2	PT	½
¾″	27.30,	27.05	NPT	¾	27.7	PT	¾
1″	34.05,	33.80	NPT	1	34.5	PT	1
1¼″	42.80,	42.55	NPT	1 ¼	43.2	PT	1¼
1½″	48.90,	48.65	NPT	1 ½	49.1	PT	1½
2″	61.35,	61.10	NPT	2	61.1	PT	2
2½″	74.20,	73.80	NPT	2 ½	77.1	PT	2½
3″	90.15,	89.80	NPT	3	90.0	PT	3
4″	115.8,	115.45	NPT	4	115.4	PT	4

2. Tolerance
Forged Socket Welding, Threaded Fitting (ASME B16.11)

in millimeters.

Nominal Pipe Size	All Fittings				Elbow, Tee, Cross	Couping	Half Coupling
	Socket Bore Dia	Bore Dia. of Fitting	Concentricity of Bore	Coincidence of Axis	Center to Bottom of Socket	Bottom to Bottom of Socket	Bottom of Socket to Opposite Face
⅛-¼	+ 0.012 - 0.000	±0.03	Socket and Fitting bores within ±0.03	Maximum variation in alignment of socket and fitting bores for⅛in 12	±0.03	±0.06	±0.03
⅜-¾	+ 0.012 - 0.000	±0.03			±0.06	±0.12	±0.06
1-2	+ 0.012 - 0.000	±0.03			±0.08	±0.16	±0.08
2½-3	+ 0.012 - 0.000	±0.06			±0.10	±0.20	±0.10

3. KS B0222 & JIS B0203 Pipe Threads

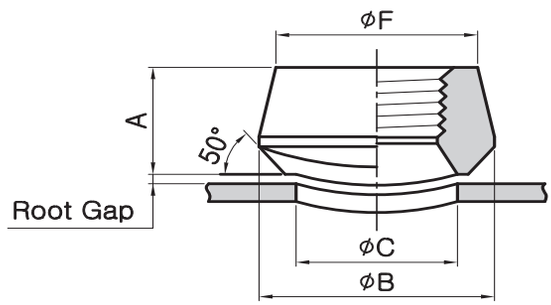

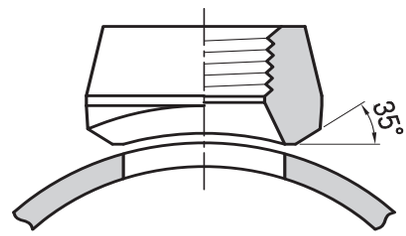

Nominal Size		Nominal Size	Screw Thread			Basic Diameter			Position of Basic Diameter			Tolerances on Basic Diameters of Internal Parallel Thread	Effective Thread Length (Min)				Nominal Pipe Size (For Reference)	
						External Thread			External Thread		Internal Thread		External Thread	Internal Thread				
			Pitch	Height of Thread	Rounding	Major Diameter d	Pitch Diameter d2	Minor Diameter d1	From the End' of Pipe		The End of Pipe		Fitting Allowance	When there is an Incomplete thread or More		When There is on Incomplete Thread		
						Internal Thread			Basic Length	Tolerance Axially	Tolerance Axially			Internal Taper Thread	Internal Parallel Thread	Internal Taper and parallel Thread	Outside Diameter	Wall thicknese
						Major Diameter	Pitch Diameter	Minor Diameter										
		n	p	h	r	D	D2	D1	a	±b	±C	±	f	l	l	t		
PT	15 (½)	14	1.8143	1.162	0.25	20.955	19.793	18.631	8.16	1.81	2.27	0.142	5.00	12.7	15.0	9.1	21.7	2.8
PT	20(¾)	14	1.8143	1.162	0.25	26.441	25.279	24.117	9.53	1.81	2.27	0.142	5.60	14.1	16.3	10.2	27.2	2.8
PT	25(1)	11	2.3091	1.479	0.32	33.249	31.770	30.291	10.39	2.31	2.89	0.180	6.40	16.2	19.0	11.5	34.0	3.2
PT	32(1¼)	11	2.3091	1.479	0.32	41.910	40.431	38.952	12.70	2.31	2.89	0.180	6.40	18.5	21.4	13.4	42.7	3.5
PT	40(1½)	11	2.3091	1.479	0.32	47.803	46.324	44.845	12.70	2.31	2.89	0.180	6.40	18.5	21.4	13.4	48.6	3.5
PT	50(2)	11	2.3091	1.479	0.32	59.614	58.135	56.656	15.88	2.31	2.89	0.180	7.50	22.8	25.7	16.9	60.5	3.8
PT	65(2½)	11	2.3091	1.479	0.32	75.184	73.705	72.226	17.46	3.64	3.46	0.217	9.22	26.7	30.2	18.6	76.3	4.2
PT	80(3)	11	2.3091	1.479	0.32	87.884	86.405	84.926	20.64	3.64	3.46	0.217	9.22	29.9	33.3	21.1	89.1	4.2
PT	90(3½)	11	2.3091	1.479	0.32	100.330	98.851	97.372	22.23	3.64	3.46	0.217	9.30	31.5	34.9	22.4	101.6	4.2
PT	100(4)	11	2.3091	1.479	0.32	113.030	111.551	110.072	25.40	3.64	3.46	0.217	10.40	35.9	39.3	25.9	114.3	4.5
PT	125(5)	11	2.3091	1.479	0.32	138.430	136.952	135.472	25.58	3.64	3.46	0.217	11.40	40.1	43.6	29.3	139.8	4.5
PT	150(6)	11	2.3091	1.479	0.32	163.830	162.351	160.872	28.58	3.64	3.46	0.217	11.50	40.1	43.6	29.3	165.2	5.0

4. ASME B2.1 Taper Pipe Threads. (Except Dryseal)

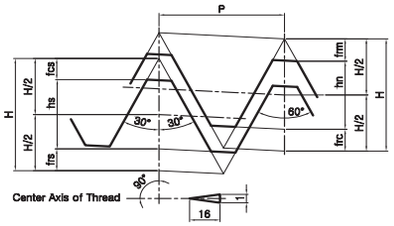

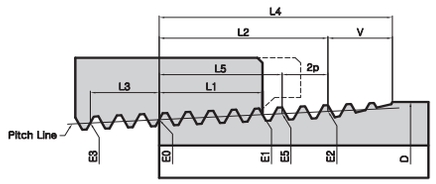

Thread Element	27 Threads Per inch p= 0.03704	18 Threads Per inch p= 0.05556	14 Threads Per inch p= 0.07143	11½ Threads Per inch p= 0.08696	8 Threads Per inch p= 0.12500
H=0.866p	0.0321	0.4810	0.0619	0.0753	0.1082
hs=hh=0.760p	0.0281	0.0422	0.0543	0.0661	0.0950
frs=frn=0.033p	0.0012	0.0088	0.0024	0.0029	0.0041
fcs=fcn=0.073p	0.0027	0.0041	0.0052	0.0063	0.0091

Nominal Pipe Size (NPT)	Outside Diameter of Pipe D	Threads Per inch n	Pitch of Thread P	Pitch Effective Thread, External Diameter at beginning of External Thread	Handtight Engagement			Effective Thread, External		
					Length L1		Dia E1	Length L2		Dia E2
					In.	Thds.		In.	Thds.	
1	2	3	4	5	6	7	8	9	10	11
⅛	0.405	27.0	0.03704	0.36351	0.1615	4.36	0.37360	0.2639	7.12	0.38000
¼	0.540	18.0	0.05556	0.47739	0.2278	4.10	0.49163	0.4018	7.23	0.50250
⅜	0.675	18.0	0.05556	0.61201	0.2400	4.32	0.62701	0.4078	7.43	0.63750
½	0.840	14.0	0.07143	0.75843	0.3200	4.48	0.77843	0.5337	7.47	0.79179
¾	1.050	14.0	0.07143	0.96768	0.3390	4.75	0.98887	0.5457	7.64	1.00179
1	1.315	11.5	0.08696	1.21363	0.4000	4.60	1.23863	0.6828	7.85	1.25630
1¼	1.660	11.5	0.08696	1.55713	0.4200	4.83	1.58338	0.7068	8.13	1.60130
1½	1.900	11.5	0.08696	1.79609	0.4200	4.83	1.82234	0.7235	8.32	1.84130
2	2.375	11.5	0.08695	2.26902	0.4360	5.01	2.29627	0.7565	8.70	2.31630
2½	2.875	8.0	0.12500	2.71953	0.6820	5.46	2.76216	1.1375	9.10	2.79062
3	3.500	8.0	0.12500	3.34062	0.7660	6.13	3.38850	1.2000	9.60	3.41562
3½	4.000	8.0	0.12500	3.83750	0.8210	6.57	3.88881	1.2500	10.00	3.91562
4	4.500	8.0	0.12500	4.33438	0.8440	6.75	4.38712	1.3000	10.40	4.41562

Nominal Pipe Size (NPT)	Wrench Makeup Length for External Thread L_2 L_1		Wrench Makeup Length for External Thread			Vanish Thread V		Overall Length External Thread L_4	Nominal, Complet External Threads[5]		Height of Thread h	Increase in Dia per Thread, 0.0625/n	Basic Minor Dia at Small End of Pipe, Ka
			Length L_3		Dia E_3				Length L_5	Dia L_5			
	In.	Thds.	In	Thds.		In.	Thds.						
1	12	13	14	15	16	17	18	19	20	21	22	23	24
⅛	0.1024	2.76	0.1111	3	0.35656	0.1285	3.47	0.3924	0.1898	0.37537	0.02963	0.00231	0.3339
¼	0.1740	3.13	0.1667	3	0.46697	0.1928	3.47	0.5946	0.2907	0.49556	0.04444	0.00347	0.4329
⅜	0.1678	3.02	0.1667	3	0.60160	0.1928	3.47	0.6006	0.2967	0.63056	0.04444	0.00347	0.5676
½	0.2137	2.99	0.2143	3	0.74504	0.2478	3.47	0.7815	0.3909	0.78286	0.05714	0.00446	0.7013
¾	0.2067	2.89	0.2143	3	0.95429	0.2478	3.47	0.7935	0.4029	0.99286	0.05714	0.00446	0.9105
1	0.2828	3.25	0.2609	3	1.19733	0.3017	3.47	0.9845	0.5089	1.24543	0.06957	0.00543	1.1441
1¼	0.2868	3.30	0.2609	3	1.54083	0.3017	3.47	1.0085	0.5329	1.59043	0.06957	0.00543	1.4876
1½	0.3035	3.49	0.2609	3	1.77978	0.3017	3.47	1.0252	0.5496	1.83043	0.06957	0.00543	1.7265
2	0.3205	3.69	0.2609	3	2.25272	0.3017	3.47	1.0582	0.5826	2.30543	0.06957	0.00543	2.1995
2½	0.4555	3.64	0.2500[7]	2	2.70391	0.4337	3.47	1.5712	0.8875	2.77500	0.10000	0.00781	2.6195
3	0.4340	3.47	0.2500[7]	2	3.32500	0.4337	3.47	1.6337	0.9500	3.40000	0.10000	0.00781	3.2406
3½	0.4290	3.43	0.2500	2	3.82188	0.4337	3.47	1.6837	1.0000	3.90000	0.10000	0.00781	3.7375
4	0.4560	3.65	0.2500	2	4.31875	0.4337	3.47	1.7337	1.0500	4.40000	0.10000	0.00781	4.2344

5. Wall Thickness Schedules.

Nominal Pipe Size		Outside Diameter		Nominal Wall Thickness								
A	B	JIS	ANSI	Sch5S	SchS10S	Sch20S	GS	Sch10	LG(7.9)	Sch20	Sch30	STD
8	¼	13.8	13.7	1.2	1.65	2.0	2.3	-	-	-	-	(2.2)
10	⅜	17.3	17.1	1.2	1.65	2.0	2.3	-	-	-	-	(2.3)
15	½	21.7	21.3	1.65	2.1	2.5	2.8	-	-	-	-	(2.8)
20	¾	27.2	26.7	1.65	2.1	2.5	2.8	-	-	-	-	(2.9)
25	1	34.0	33.4	1.65	2.8	3.0	3.2	-	-	-	-	(3.4)
32	1-¼	42.7	42.2	1.65	2.8	3.0	3.5	-	-	-	-	(3.6)
40	1-½	48.6	48.3	1.65	2.8	3.0	3.5	-	-	-	-	(3.7)
50	2	60.5	60.3	1.65	2.8	3.5	3.8	-	-	-	-	(3.9)
65	2-½	76.3	73.0	2.1	3.0	3.5	4.2	-	-	-	-	(5.2)
80	3	89.1	88.9	2.1	3.0	4.0	4.2	-	-	-	-	(5.5)
90	3-½	101.6	101.6	2.1	3.0	4.0	4.2	-	-	-	-	(5.7)
100	4	114.3	114.3	2.1	3.0	4.0	4.5	-	-	-	-	(6.0)
125	5	139.8	141.3	2.8	3.4	5.0	4.5	-	-	-	-	(6.6)
150	6	165.2	168.3	2.8	3.4	5.0	5.0	-	5.0	-	-	(7.1)
175	7	190.7	-	-	-	-	5.3	-	-	-	-	-
200	8	216.3	219.1	2.8	3.8	6.5	5.8	-	5.8	6.4	7.0	(8.2)
225	9	241.8	-	-	-	-	6.2	-	-	-	-	-
250	10	267.4	273.1	3.4	4.2	6.5	6.6	-	6.6	6.4	7.8	(9.3)
300	12	318.5	323.9	4.0	4.6	6.5	6.9	-	6.9	6.4	8.4	9.5
350	14	355.6	355.6	4.0	4.8	7.9	7.9	6.4	7.9	7.9	9.5	9.5
400	16	406.4	406.4	4.2	4.8	7.9	7.9	6.4	7.9	7.9	9.5	9.5
450	18	457.2	457.2	4.2	4.8	7.9	7.9	6.4	7.9	7.9	11.1	9.5
500	20	508.0	508.0	4.8	5.5	7.9	7.9	6.4	7.9	9.5	12.7	9.5
550	22	558.8	558.8	4.8	5.5	-	-	6.4	7.9	9.5	12.7	9.5
600	24	609.6	609.6	5.5	6.4	-	-	6.4	7.9	9.5	14.3	9.5
650	26	660.4	660.4	-	-	-	-	7.9	7.9	12.7	-	9.5
700	28	711.2	711.2	-	-	-	-	7.9	7.9	12.7	15.9	9.5
750	30	762.0	762.0	6.4	7.9	-	-	7.9	7.9	12.7	15.9	9.5
800	32	812.8	812.8	-	-	-	-	7.9	7.9	12.7	15.9	9.5
850	34	863.6	863.6	-	-	-	-	7.9	7.9	12.7	15.9	9.5
900	36	914.4	914.4	-	-	-	-	7.9	7.9	12.7	15.9	9.5
950	38	965.2	965.2	-	-	-	-	-	7.9	-	-	9.5
1000	40	1016.0	1016.0	-	-	-	-	-	7.9	-	-	9.5
1050	42	1066.8	1066.8	-	-	-	-	-	7.9	-	-	9.5
1100	44	1117.6	1117.6	-	-	-	-	-	7.9	-	-	9.5
1150	46	1168.4	1168.4	-	-	-	-	-	7.9	-	-	9.5
1200	48	1219.2	1219.2	-	-	-	-	-	7.9	-	-	9.5
1250	50	1270.0	1270.0	-	-	-	-	-	*7.9	-	-	*9.5
1300	52	1320.8	1320.8	-	-	-	-	-	*7.9	-	-	*9.5
1350	54	1371.6	1371.6	-	-	-	-	-	*7.9	-	-	*9.5
1400	56	1422.4	1422.4	-	-	-	-	-	*7.9	-	-	*9.5
1450	58	1473.2	1473.2	-	-	-	-	-	*7.9	-	-	*9.5
1500	60	1524.0	1524.0	-	-	-	-	-	*7.9	-	-	*9.5

JIS G3448 ANSI B36.10M
JIS G3454 ANSI B36.19M
JIS G3455
JIS G3459

(in mm)

Nominal Wall Thickness									Outside Diameter		Nominal Pipe Size	
Sch40	Sch60	XS	Sch80	Sch100	Sch120	Sch140	Sch160	XXS	JIS	ANSI	A	B
2.2	2.4	(3.0)	3.0	-	-	-	-	-	13.8	13.7	8	¼
2.3	2.8	(3.2)	3.2	-	-	-	-	-	17.3	17.1	10	⅜
2.8	3.2	(3.7)	3.7	-	-	-	4.7	7.5	21.7	21.3	15	½
2.9	3.4	(3.9)	3.9	-	-	-	5.5	7.8	27.2	26.7	20	¾
3.4	3.9	(4.5)	4.5	-	-	-	6.4	9.1	34.0	33.5	25	1
3.6	4.5	(4.9)	4.9	-	-	-	6.4	9.7	42.7	42.2	32	1-¼
3.7	4.5	(5.1)	5.1	-	-	-	7.1	10.2	48.6	48.3	40	1-½
3.9	4.9	(5.5)	5.5	-	-	-	8.7	11.1	60.5	60.3	50	2
5.2	6.0	(7.0)	7.0	-	-	-	9.5	14.0	76.3	73.0	65	2-½
5.5	6.6	(7.6)	7.6	-	-	-	11.1	15.2	89.1	88.9	80	3
5.7	7.0	(8.1)	8.1	-	-	-	12.7	-	101.6	101.6	90	3-½
6.0	7.1	(8.6)	8.6	-	11.1	-	13.5	17.1	114.3	114.3	100	4
6.6	8.1	(9.5)	9.5	-	12.7	-	15.9	19.0	139.8	141.3	125	5
7.1	9.3	(11.0)	11.0	-	14.3	-	18.2	21.9	165.2	168.3	150	6
-	-	-	-	-	-	-	-	-	190.7	-	175	7
8.2	10.3	(12.7)	12.7	15.1	18.2	20.6	23.0	22.2	216.3	219.1	200	8
-	-	-	-	-	-	-	-	-	241.8	-	225	9
9.3	12.7	12.7	15.1	18.3	21.4	25.4	28.6	25.4	267.4	273.1	250	10
10.3	14.3	12.7	17.4	21.4	25.4	28.6	33.3	25.4	318.5	323.9	300	12
11.1	15.1	12.7	19.0	23.8	27.8	31.8	35.7	-	355.6	355.6	350	14
12.7	16.7	12.7	21.4	26.2	30.9	36.5	40.5	-	406.4	406.4	400	16
14.3	19.0	12.7	23.8	29.4	34.9	39.7	45.2	-	457.2	457.2	450	18
15.1	20.6	12.7	26.2	32.5	38.1	44.4	50.0	-	508.0	508.0	500	20
-	22.2	12.7	28.6	34.9	41.3	47.6	54.0	-	558.8	558.8	550	22
17.5	24.6	12.7	31.0	38.9	46.0	52.4	59.5	-	609.6	609.6	600	24
-	-	12.7	-	-	-	-	-	-	660.4	660.4	650	26
-	-	12.7	-	-	-	-	-	-	711.2	711.2	700	28
-	-	12.7	-	-	-	-	-	-	762.0	762.0	750	30
17.5	-	12.7	-	-	-	-	-	-	812.8	812.8	800	32
17.5	-	12.7	-	-	-	-	-	-	863.6	863.6	850	34
19.1	-	12.7	-	-	-	-	-	-	914.4	914.4	900	36
-	-	12.7	-	-	-	-	-	-	965.2	965.2	950	38
-	-	12.7	-	-	-	-	-	-	1016.0	1016.0	1000	40
-	-	12.7	-	-	-	-	-	-	1066.8	1066.8	1050	42
-	-	12.7	-	-	-	-	-	-	1117.6	1117.6	1100	44
-	-	12.7	-	-	-	-	-	-	1168.4	1168.4	1150	46
-	-	12.7	-	-	-	-	-	-	1219.2	1219.2	1200	48
-	-	12.7	-	-	-	-	-	-	1270.0	1270.0	1250	50
-	-	12.7	-	-	-	-	-	-	1320.8	1320.8	1300	52
-	-	12.7	-	-	-	-	-	-	1371.6	1371.6	1350	54
-	-	12.7	-	-	-	-	-	-	1422.4	1422.4	1400	56
-	-	12.7	-	-	-	-	-	-	1473.2	1473.2	1450	58
-	-	12.7	-	-	-	-	-	-	1524.0	1524.0	1500	60

6. Material Specifications

ASTM	Grade	Classification		C %	Mn %	P Max. %	S Max. %	Si %	Ni %	Cr %	Mo %	T.S. Min. psi (kg/mm²)	Y.S. Min. psi (kg/mm²)	EL Min. %	RED Min. %	HB
A-105*		Carbon Steel		Max 0.35	0.60~ 1.05	0.040	0.050	MAX 0.35	MAX 0.40	MAX 0.30	MAX 0.12	70,000 (49.2)	36,000 (25.3)	22	30	MAX 187
A-181*	60	Carbon Steel		Max 0.35	MAX 0.90	0.050	0.050	MAX (0.35)				60.000 (42.2)	30.000 (21.1)	22	35	
A-181	70	Carbon Stee		Max 0.35	MAX 0.90	0.050	0.050	MAX (0.35)				70.000 (49.2)	36.000 (25.3)	18	24	
A-182	F1	½	Mo	Max 0.35	0.60~ 0.90	0.045	0.045	0.15~ 0.35			0.44~ 0.65	70.000 (49.2)	40.000 (28.1)	20	30	143~ 192
A-182	F5	5Cr-½	Mo	Max 0.15	0.30~ 0.60	0.030	0.030	MAX 0.50	MAX 0.50	4.00~ 6.00	0.44~ 0.65	70.000 (49.2)	40.000 (28.1)	20	35	143~ 217
A-182	F5a	5Cr-½	Mo	Max 0.25	MAX 0.60	0.040	0.030	MAX 0.50	MAX 0.50	4.00~ 6.00	0.44~ 0.65	90.000 (63.3)	65.000 (45.7)	22	50	187~ 248
A-182	F11-1	1¼Cr-½	Mo	0.05~ 0.15	0.30~ 0.60	0.030	0.030	0.50~ 1.00		1.00~ 1.50	0.44~ 0.65	60.000 (42.2)	30.000 (21.1)	20	45	121~ 174
A-182	F11-2	1¼Cr-½	Mo	0.10~ 0.20	0.30~ 0.80	0.040	0.040	0.50~ 1.00		1.00~ 1.50	0.44~ 0.65	70.000 (49.2)	40.000 (28.1)	20	30	143~ 207
A-182	F11-3	1Cr-½	Mo	0.10~ 0.20	0.30~ 0.80	0.040	0.040	0.50~ 1.00		1.00~ 1.50	0.44~ 0.65	75.000 (52.7)	45.000 (31.6)	20	30	156~ 207
A-182	F12-1	1Cr-½	Mo	0.05~ 0.15	0.30~ 0.60	0.045	0.045	MAX 0.50		0.80~ 1.25	0.44~ 0.65	60.000 (42.2)	30.000 (21.1)	20	45	121~ 174
A-182	F12-2	1¼Cr-½	Mo	0.10~ 0.20	0.30~ 0.80	0.040	0.040	0.10~ 0.60		0.80~ 1.25	0.44~ 0.65	70.000 (49.2)	40.000 (28.1)	20	30	143~ 174
A-182	F11	1Cr-½	Mo	0.10~ 0.20	0.30~ 0.60	0.040	0.040	0.50~ 1.00		1.00~ 1.50	0.44~ 0.65	70.000 (49.2)	40.000 (28.1)	20	30	143~ 207
A-182	F12	1Cr-½	Mo	0.10~ 0.20	0.30~ 0.80	0.040	0.040	0.10~ 0.60		0.80~ 1.25	0.44~ 0.65	70.000 (49.2)	40.000 (28.1)	20	30	143~ 207
A-182	F22	2¼Cr-1	Mo	MAX 0.15	0.30~ 0.60	0.040	0.040	MAX 0.50		2.00~ 2.50	0.87~ 1.13	75.000 (52.7)	45.000 (31.6)	20	30	156~ 207
A-182	F304	18Cr-8	Ni	MAX 0.08	MAX 2.00	0.040	0.030	MAX 1.00	8.00~ 11.00	18.00~ 20.00		75.000 (52.7)	30.000 (21.1)	30	50	
A-182	F304L	18Cr-8 Low	Ni	MAX 0.035	MAX 2.00	0.040	0.030	MAX 1.00	8.00~ 13.00	18.00~ 20.00		75.000 (49.2)	25.000 (17.6)	30	50	
A-182	F316	18Cr-8 MO	Ni	MAX 0.08	MAX 2.00	0.040	0.030	MAX 1.00	10.00~ 14.00	16.00~ 18.00	2.00~ 3.00	75.000 (52.7)	30.000 (21.7)	30	50	
A-182	F316L	18Cr-8 MO-LOW	Ni	MAX 0.035	MAX 2.00	0.040	0.030	MAX 1.00	10.00~ 15.00	16.00~ 18.00	2.00~ 3.00	65.000 (45.7)	25.000 (17.6)	30	50	
A-182	F321	18Cr-8 Ti	Ni	MAX 0.08	MAX 2.00	0.030	0.030	MAX 1.00	9.00~ 12.00	Min 17.00		75.000 (52.7)	30.000 (21.1)	30	50	
A-182	F347	18Cr-8 Cb	Ni	MAX 0.08	MAX 2.00	0.030	0.030	MAX 1.00	9.00~ 13.00	17.00~ 20.00		75.000 (52.7)	30.000 (21.1)	30	50	
A-350*	LF1	Carbon Steel		MAX 0.30	0.75~ 1.05	0.035	0.040	0.15~ 0.30	MAX 0.40	MAX 0.30	MAX 0.12	60,000~ 85,000 (42.2~59.7)	30.000 (21.1)	25	38	
A-350*	LF2	Carbon Steel		MAX 0.30	MAX 1.35	0.035	0.040	0.15~ 0.30	MAX 0.40	MAX 0.30	MAX 0.12	70,000~ 95,000 (49.2~66.8)	36.000 (25.3)	22	30	
A-350*	LF3	3½	Ni	MAX 0.20	MAX 1.35	0.035	0.040	0.20~ 0.35	3.25~ 3.75	MAX 0.30	MAX 0.12	70,000~ 95,000 (49.2~66.8)	37.500 (26.4)	22	35	

·OTHER ELEMENTS : copper (0.40% MAX.), Vanadium, (0.03% MAX.), Columbium (0.02% MAX.)
·The sum of Cu, Ni, Cr and Mo Shall not be exceed 1.00%
·The sum of Cr and Mo shall not be exceed 0.32%

S-LOK®

Medium Pressure Cone and Thread Fittings

The best partner for value creation
We support the innovations of customer

12

Catalogue No. S-LOK Mar.2024

Medium Pressure Cone and Thread Fitting - MP Series

up to 20,000 psig

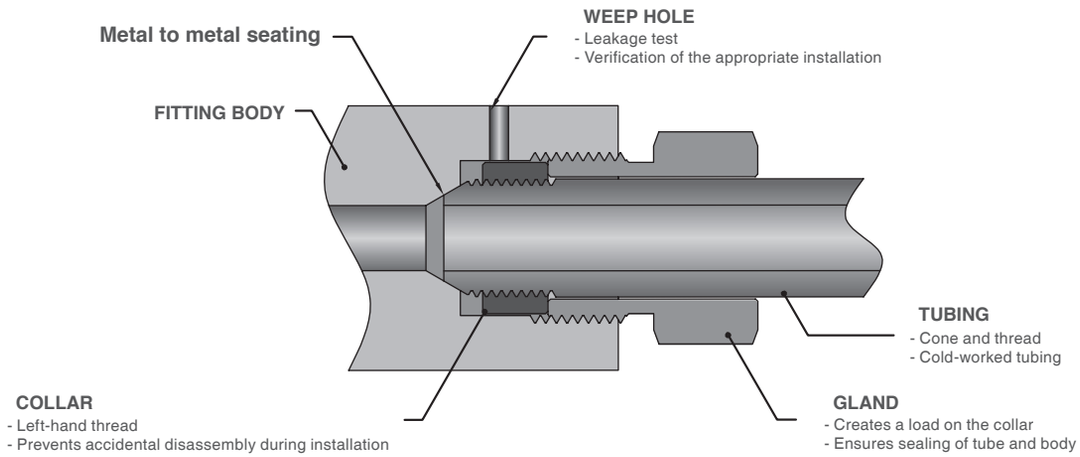

Features

- Cone and thread connection provides dependable medium and high pressure performane.
- Pressures to 20,000 psi (1,379 bar)
- Available manufactured from cold worked 316 Sainless steel.
- Operating Temperatures from -423°F (-252°C) to 1200°F (650°C).
- Anti-vibration connection components available.
- All items available in special material.

Materials of Construction

Component	Material
Body	Stainless Steel 316
Gland	Stainless Steel 316
Collar	Stainless Steel 316

Ordering Information

MPL	-	8	-	S6LS
Fitting Series & Product Type		Connection Szie		Material

Product Type	Connection Size	Material
Reder to the basic ordering number in the dimension table.	- **4** : 1/4” - **6** : 3/8” - **9** : 9/16” - **12** : 3/4” - **16** : 1”	- S6 : Stainless Steel 316

Cone & Thread Tube End Dimensions

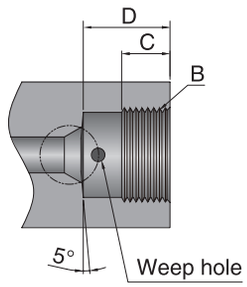

Female Pocket

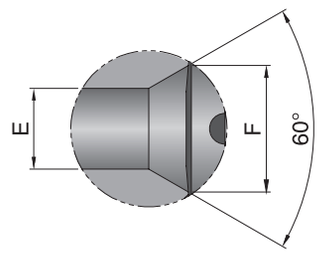

Female Seat

Tube O.D inch	Dinmensions, mm(inch)				
	B	C	D	E	F
1/4	7/16-20	7.1(0.28)	12.7(0.50)	2.8(0.11)	4.8(0.19)
3/8	9/16-18	9.7(0.38)	16.0(0.63)	5.1(0.20)	7.9(0.31)
9/16	13/16-16	11.2(0.44)	19.1(0.75)	7.9(0.31)	12.7(0.50)
3/4	3/4-14 NPSM	12.7(0.50)	23.9(0.94)	11.2(0.44)	16.0(0.63)
1	1 3/8-12	20.6(0.81)	33.3(1.31)	14.2(0.56)	22.4(0.88)

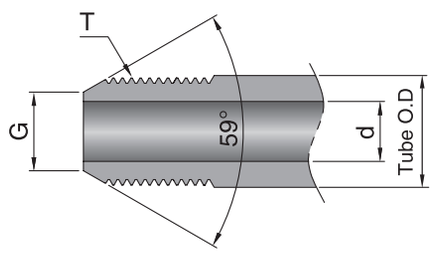

Male Coned Tube

Tube O.D inch	Dinmensions, mm(inch)			Working Pressure, psig(bar)		
				Strain-Hardened 316 SS		
	G	d	T Left Hand Thread	200˚F (93˚C)	400˚F (204˚C)	600˚F (316˚C)
1/4(6.35)	3.6(0.14)	2.77(0.109)	1/4-28	20,000(1,379)	19,000(1,310)	18,000(1,241)
3/8(9.53)	6.4(0.25)	5.16(0.203)	3/8-24	20,000(1,379)	19,000(1,310)	18,000(1,241)
9/16(14.29)	10.4(0.41)	7.92(0.312)	9/16-18	20,000(1,379)	19,000(1,310)	18,000(1,241)
3/4(19.05)	14.2(0.56)	11.13(0.438)	3/4-16	20,000(1,379)	19,000(1,310)	18,000(1,241)
1(25.40)	18.3(0.72)	14.27(0.562)	1-14	20,000(1,379)	19,000(1,310)	18,000(1,241)

Basic Ordering Number and Dimensions

Dimensions are for reference only and are subject to change. Dimensions shown with collar and gland finger-tight.

Coupling

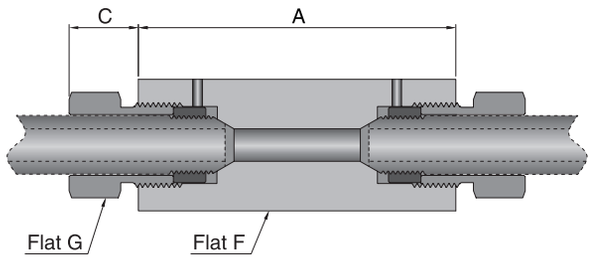

Basic Ordering Number	Tube O.D	Dinmensions, mm (inch)			
		A	C	F	G
MPU-4	1/4	38.1(1.50)	9.7(0.38)	3/4	1/2
MPU-6	3/8	44.5(1.75)	12.2(0.48)	3/4	5/8
MPU-9	9/16	53.8(2.12)	17.3(0.68)	1	7/8
MPU-12	3/4	63.5(2.50)	15.0(0.59)	1 3/8	1 3/16
MPU-16	1	88.9(3.50)	18.8(0.74)	1 3/4	1 3/8

Elbow

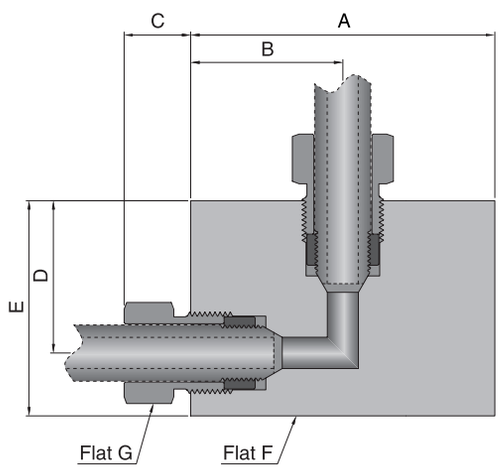

Basic Ordering Number	Tube O.D	Dinmensions, mm (inch)						
		A	B	C	D	E	F	G
MPL-4	1/4	38.1(1.50)	19.1(0.75)	9.7(0.38)	19.1(0.75)	28.6(1.13)	5/8	1/2
MPL-6	3/8	50.8(2.00)	25.4(1.00)	12.2(0.48)	25.4(1.00)	35.1(1.38)	3/4	5/8
MPL-9	9/16	63.5(2.50)	31.8(1.25)	17.3(0.68)	31.8(1.25)	44.5(1.75)	1	7/8
MPL-12	3/4	76.2(3.00)	38.1(1.50)	15(0.59)	38.1(1.50)	57.2(2.25)	1 3/8	1 3/16
MPL-16	1	105(4.13)	52.3(2.06)	18.8(0.74)	52.3(2.06)	76.2(3.00)	1 3/4	1 3/8

Tee

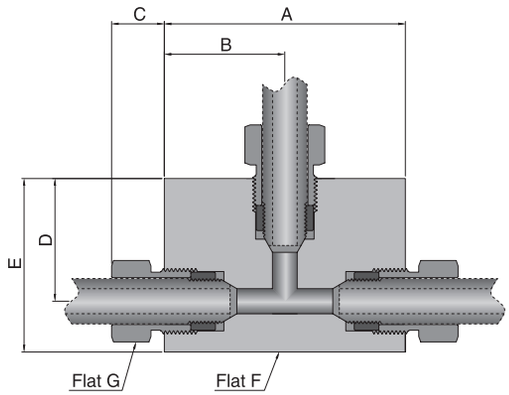

Basic Ordering Number	Tube O.D	Dinmensions, mm (inch)						
		A	B	C	D	E	F	G
MPT-4	1/4	38.1(1.50)	19.1(0.75)	9.7(0.38)	19.1(0.75)	28.6(1.13)	5/8	1/2
MPT-6	3/8	50.8(2.00)	25.4(1.00)	12.2(0.48)	25.4(1.00)	35.1(1.38)	3/4	5/8
MPT-9	9/16	63.5(2.50)	31.8(1.25)	17.3(0.68)	31.8(1.25)	44.5(1.75)	1	7/8
MPT-12	3/4	76.2(3.00)	38.1(1.50)	15(0.59)	38.1(1.50)	57.2(2.25)	1 3/8	1 3/16
MPT-16	1	105(4.12)	52.3(2.06)	18.8(0.74)	52.3(2.06)	76.2(3.00)	1 3/4	1 3/8

Cross

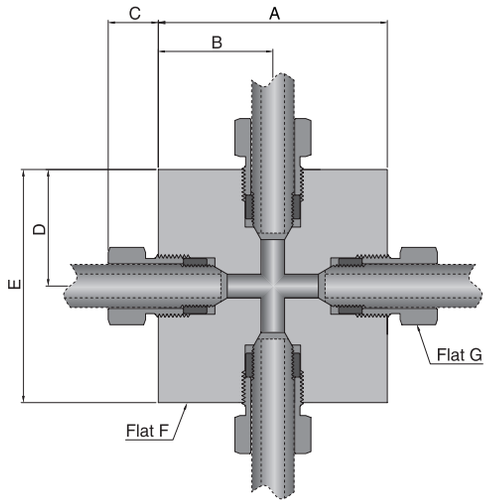

Basic Ordering Number	Tube O.D	Dinmensions, mm (inch)						
		A	B	C	D	E	F	G
MPX-4	1/4	38.1(1.50)	19.1(0.75)	9.7(0.38)	19.1(0.75)	38.1(1.50)	5/8	1/2
MPX-6	3/8	50.8(2.00)	25.4(1.00)	12.2(0.48)	25.4(1.00)	50.8(2.00)	3/4	5/8
MPX-9	9/16	63.5(2.50)	31.8(1.25)	17.3(0.68)	31.8(1.25)	63.5(2.50)	1	7/8
MPX-12	3/4	76.2(3.00)	38.1(1.50)	15(0.59)	38.1(1.50)	76.2(3.00)	1 3/8	1 3/16
MPX-16	1	105(4.12)	52.3(2.06)	18.8(0.74)	52.3(2.06)	105(4.12)	1 3/4	1 3/8

Bulkhead

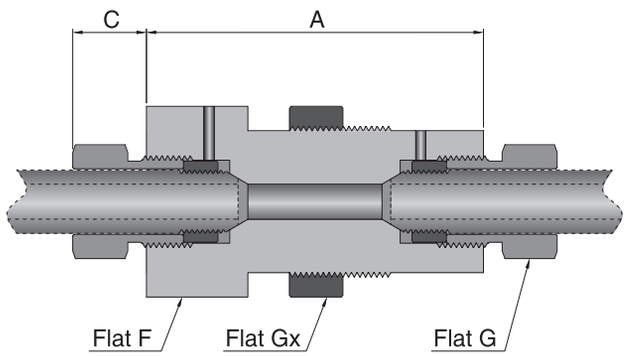

Basic Ordering Number	Tube O.D	Dinmensions, mm (inch)						
		A	C	F	G	Gx	Panel hole Size	Maximum Panel Thickness
MPBH-4	1/4	50.8(2.00)	9.7(0.38)	1	1/2	1	22.4(0.88)	9.7(0.38)
MPBH-6	3/8	50.8(2.00)	12.2(0.48)	1	5/8	1	23.9(0.94)	9.7(0.38)
MPBH-9	9/16	66.5(2.62)	17.3(0.68)	1 3/8	7/8	1 3/8	31.8(1.25)	12.7(0.50)
MPBH-12	3/4	66.5(2.62)	15(0.59)	1 7/8	1 3/16	1 7/8	42.9(1.69)	9.7(0.38)
MPBH-16	1	88.9(3.50)	18.8(0.74)	2 1/8	1 3/8	2 1/8	50.8(2.00)	12.7(0.50)

Cap

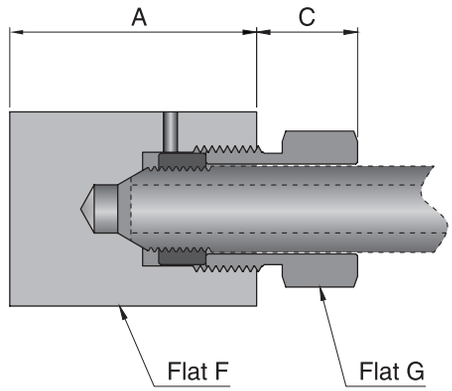

Basic Ordering Number	Tube O.D	Dinmensions, mm (inch)			
		A	C	F	G
MPC-4	1/4	25.4(1.00)	9.7(0.38)	5/8	1/2
MPC-6	3/8	31.8(1.25)	12.2(0.48)	3/4	5/8
MPC-9	9/16	38.1(1.50)	17.3(0.68)	1	7/8
MPC-12	3/4	44.5(1.75)	15(0.59)	1 3/8	1 3/16
MPC-16	1	57.2(2.25)	18.8(0.74)	1 3/4	1 3/8

Plug

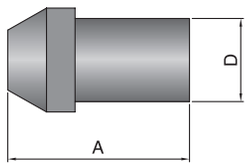

Basic Ordering Number	Tube O.D	Dinmensions, mm (inch)	
		A	D
MPP-4	1/4	25.4(1.00)	6.4(0.25)
MPP-6	3/8	31.8(1.25)	9.5(0.38)
MPP-9	9/16	39.6(1.56)	14.2(0.56)
MPP-12	3/4	41.2(1.62)	19.1(0.75)
MPP-16	1	55.6(2.19)	25.4(1.00)

Gland

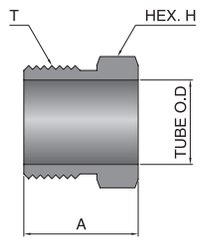

Basic Ordering Number	Tube O.D	Dinmensions, mm (inch)		
		A	H	Thread, T
MPG-4	1/4"	14.2 (0.56)	12.7 (0.5)	7/16 - 20 UNF
MPG-6	3/8"	18.3 (0.72)	15.8 (0.62)	9/16 - 18 UNF
MPG-9	9/16"	25.4 (1.00)	22.2 (0.87)	13/16 - 16 UNF
MPG-12	3/4"	23.9 (0.94)	28.5 (1.12)	3/4 - 14 NPSM
MPG-16	1"	35.1 (1.38)	34.9 (1.37)	1-3/8 - 12 UNF

Collar

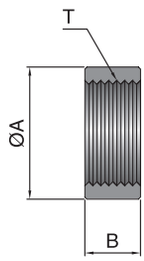

Basic Ordering Number	Tube O.D	Dinmensions, mm (inch)		
		A	B	Thread, T
MPC-4	1/4"	9.7 (0.38)	5.6 (0.22)	1/4 - 28 L.H
MPC-6	3/8"	11.9 (0.47)	6.4 (0.25)	3/8 - 24 L.H
MPC-9	9/16"	18.3 (0.72)	7.9 (0.31)	9/16 - 18 L.H
MPC-12	3/4"	23.9 (0.94)	9.7 (0.37)	3/4 - 16 L.H
MPC-16	1"	31.8 (1.25)	12.7 (0.5)	1 - 14 L.H

Cone & Thread Nipples

Cone & Thread Nipple's standard material is 316 stainless steel.
The length is up to 304.8mm (12"), gland and collar are not included.
Product number is shown in the table below.

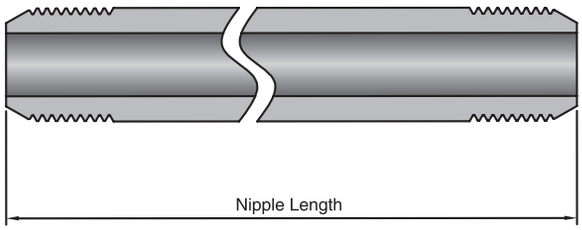

Tube O.D inch	Tube I.D inch	Working Pressure, psi						
		Nipple Length, mm (inch)						
		70 (2.75)	76.2 (3)	101.6 (4)	152.4 (6)	203.2 (8)	254 (10)	304.8 (12)
1/4	7/64	MPN-4-2.75S	MPN-4-3S	MPN-4-4S	MPN-4-6S	MPN-4-8S	MPN-4-10S	MPN-4-12S
3/8	13/64		MPN-6-3	MPN-6-4S	MPN-6-6S	MPN-6-8S	MPN-6-10S	MPN-6-12S
9/16	5/16			MPN-9-4S	MPN-9-6S	MPN-9-8S	MPN-9-10S	MPN-9-12S
3/4	7/16				MPN-12-6S	MPN-12-8S	MPN-12-10S	MPN-12-12S
1	9/16				MPN-16-6S	MPN-16-8S	MPN-16-10S	MPN-16-12S

Tubing

Cold-drawn 1/2 hard condition seamless tubing.
Tubing with approximately 40% higher strength than annealed tubing.
Standard length is 6 meters.
Standard material is 316 stainless steel.

Basic Ordering Number	Tube O.D inch	Tube I.D mm (inch)
MPTSS-4-6M	1/4	2.8 (0.109)
MPTSS-6-6M	3/8	5.2 (0.203)
MPTSS-9-6M	9/16	7.9 (0.312)
MPTSS-12-6M	3/4	11.1 (0.438)
MPTSS-16-6M	1	14.3 (0.563)

Anti-vibration Assemblies

For Piping systems subjects to severe vibration and shock, it is recommended to use anti-vibration assemblies. Using anti-vibration assemblies can help ensure stability of the system and extend life of tube connection. Anti-vibration assemblies are available for all S-LOK medium pressure fitting - MP Series

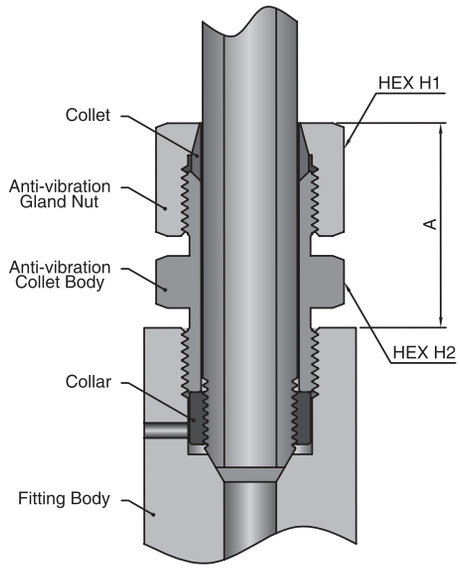

Basic Ordering Number	Tube O.D inch	Dinmensions, mm (inch)		
		A	H1	H2
MPAV-4	1/4	23.9 (0.94)	15.8 (0.62)	15.8 (0.62)
MPAV-6	3/8	30 (1.18)	19.1 (0.75)	19.1 (0.75)
MPAV-9	9/16	36.6 (1.44)	23.9 (0.94)	23.9 (0.94)
MPAV-12	3/4	39.6 (1.56)	34.9 (1.37)	34.9 (1.37)
MPAV-16	1	44.5 (1.75)v	44.5 (1.75)	44.5 (1.75)

Anti-vibration Components

Tube O.D inch	Basic Ordering Number			
	Collet	Anti-vibration Gland Nut	Anti-vibration Collet Body	Collar
1/4	MPAVC-4	MPAVN-4	MPAVB-4	MPC-4
3/8	MPAVC-6	MPAVN-6	MPAVB-6	MPC-6
9/16	MPAVC-9	MPAVN-9	MPAVB-9	MPC-9
3/4	MPAVC-12	MPAVN-12	MPAVB-12	MPC-12
1	MPAVC-16	MPAVN-16	MPAVB-16	MPC-16

Installation Instructions - Medium Pressure Cone and Thread Fitting - MP Series

1. Lubricate all male threads with anti-seize lubricant.
   Lubricate cone end of the tube with system a compatible lubricant.

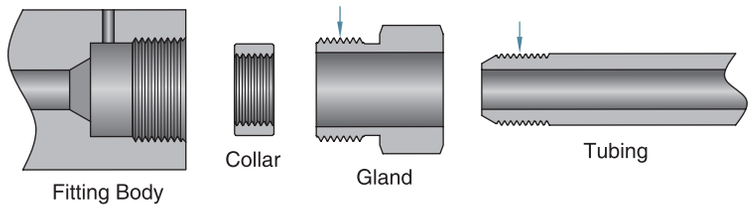

2. For standard fittings, slide the tubing into the gland.
   For anti-vibration assemblies, slide the tubing into the anti-vibration collet body and collet onto tubing.

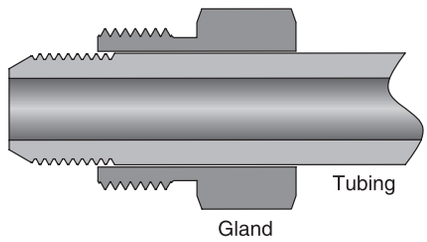

3. Rotate the collar counter-clockwise until 1 ~ 2 full threads are ecposed at the conical end of the tube, then insert into the fitting body. Make sure the conical end of the tubing rests firmly on the angled seat of the fitting body.

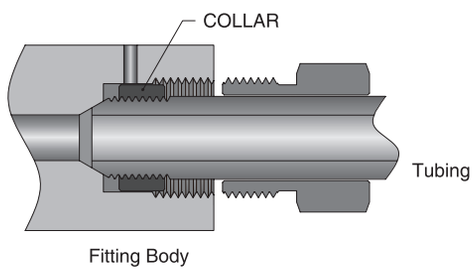

4. For standard fittings thread the gland into the fitting body until finger tight.
   Hold the fitting body firmly and tighten the gland to the required torque.
   For anti-vibration assemblies, thread the anti-vibration collet body into the fitting body until finger tight.
   Tighten the anti-vibration collet body to specified torque.
   Then thread the anti-vibration gland nut onto the anti-vibration collet body until finger tight.
   Tighten the anti-vibration gland nut to the required torque.

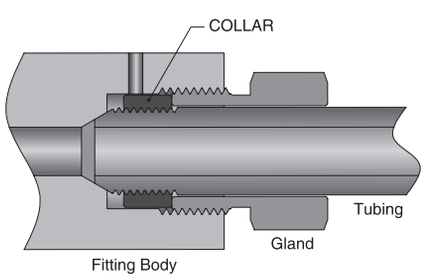

Tube O.D inch	Required Torque N·m (kgf·cm)
1/4	27 (275.3)
3/8	40.5 (413)
9/16	75.5 (769.9)
3/4	125 (127.4)
1	215 (2192)

Ball & Plug Valves

The best partner for value creation
We support the innovations of customers

01

Catalogue No. S-LOK Mar.2024

SBV10 / 20 Series Ball Valves

Features

- Compact design with hexagon bar-stock for high integrity.
- SBV10 Series
- Working pressure : 1000 psig (69bar) at 21˚C (70˚F)
- Temperature : 0 to 450˚F (18 to 232˚C)
- SBV20 Series
- Working pressure : 2000 psig (137.9bar) at 21˚C (70˚F)
- Temperature : -44˚ to 450˚F (-42 to 232˚C)
- Low torque quarter turn actuation.
- Size range of from 1/4″ to 2 ″ tubing and piping.
- Various end connections : Reliable S-LOK, NPT, ISO male & female.
- Butterfly handle or Key lock handle is available as option.
- Locking device handle in on and off position.

Applications

- Water, Oil, Gas
- Petrochemical Plants
- Steel mils
- Heavy Vehicles

Testing

- Every valve is factory tested with Nitrogen @ 1000psig (69bar) to maximum allowable leak of 0.1 (SSCM).
- The stem packing is tested for no detectable leakage.

Pressure and Temperature Ratings

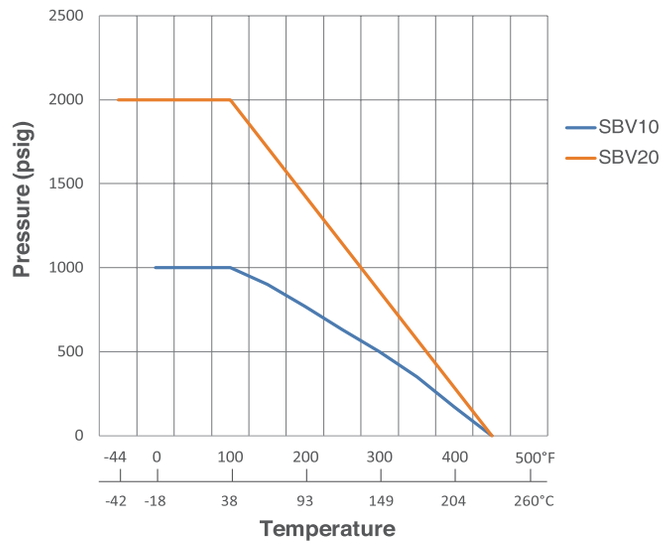

Materials of Construction

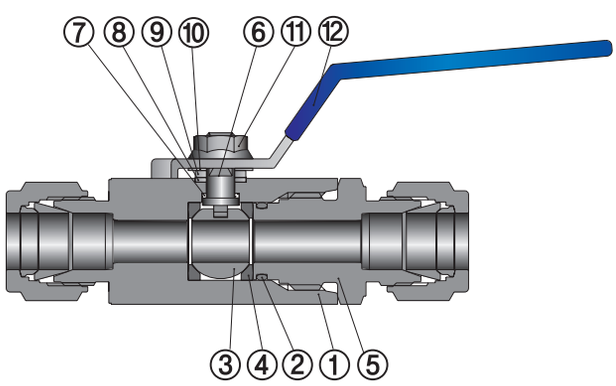

No	Component	Material	
		Stainless Steel	Brass
1	Body	SS316 / A479 or A276	B16 or JIS H3250
2	O-ring	FKM / *HNBR	NBR
3	Ball	SS316 / A479 or A276	
4	Seat	Reinforced PTFE / * Modified PTFE	
5	End Connetor	SS316 / A479 or A276	B16 or JIS H3250
	Insert		
6	Stem	SS316 / A479 or A276	
7	Lower Packing	Reinforced PTFE	
8	Upper Packing	Reinforced PTFE	
9	Gland	Stainless Steel	
10	Gland Washer	Stainless Steel	
11	Flange Nut	Stainless Steel	
12	Handle	Stainless Steel with PVC Coating	

* HNBR / Modified PTFE is a base option for SBV20 Series.

Dimensions

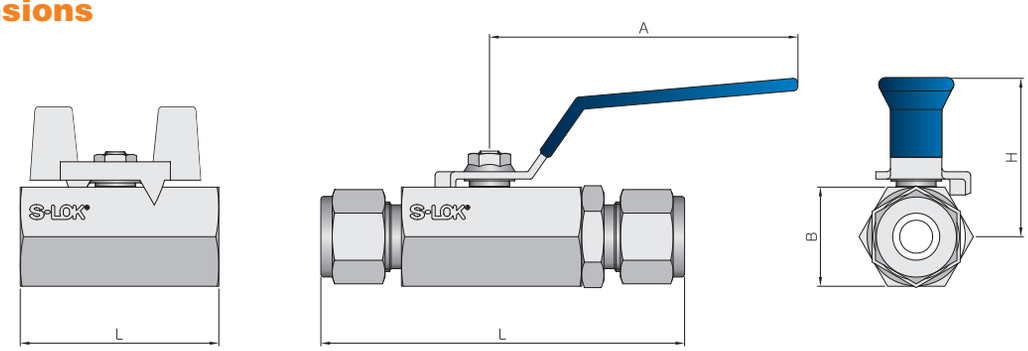

Ordering Number		Orifice (mm)	Cv	End Connections	Dimensions (mm)			
					L	H	A	B
SBVA	S-6M	5.0	1.25	6mm S-LOK	79	31	55	17
	S-4T		1.25	1/4″ S-LOK	79			
	F-4N		1.35	1/4″ Female NPT	42			
SBVB	S-10M	7.5	2.6	10mm S-LOK	90	40	78	22
	S-6T		2.	3/8″ S-LOK	90			
	F-6N		2.6	3/8″ Female NPT	45			
SBVC	S-12M	9.0	9.25	12mm S-LOK	98	42	78	27
	S-8T		9.25	1/2″ S-LOK	98			
	F-8N		9.25	1/2″ Female NPT	54			
SBVD	S-16M	12.5	10.6	16mm S-LOK	108	51	96	32
	S-10T		10.6	5/8″ S-LOK	108			
	S-12T		12.65	3/4″ S-LOK	107			
	F-12N		12.65	3/4″ Female NPT	63			
SBVE	S-16T	16.0	17.35	1″ S-LOK	133	55	96	38
	F-16N		17.35	1″ Female NPT	78			

Key Operation Handle

- Possible to operate locking device with master key when on-off the handle.
- Just changing the handle with locking device is possible.
- Choice of handle color is possible (Blue, Red, or Green).

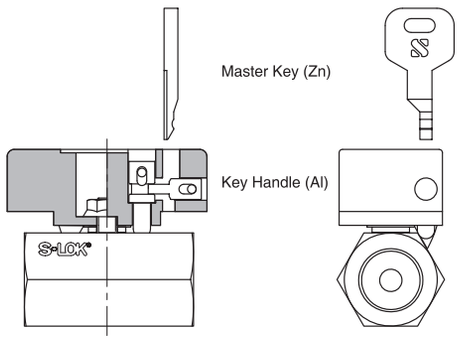

Ordering Information

SBVA — **F** — **4N** — **BF** — **S6**

Valve Series
- **SBVA~E** : SBV10 Series
- **SBV20A~20E** : SBV20 Series

Connection Type
- **S** : S-LOK
- **M** : Male Thread
- **F** : Female Thread
- **BW** : Butt Weld
- **SW** : Socket Weld

Connection Size

Handle
- **Nil** : Standard Lever Handle
- **BF** : Optional Butterfly Handle
- **LD** : Locking Device
- **KH** : Key Operation Handle
  - **-Nil** : Blue (Standard)
  - **-R** : Red, **-G** : Green

Body Material
- **S6** : 316 Stainless Steel
- **BS** : Brass

One-Piece Instrument Ball Valves

Features

- Pressure rating up to 3000psig (206bar).
- Temperatures from -53 to 148˚C (-65 to 300˚F).
- 1/16 to 3/4 inch and 3 to 12 mm end connections.
- Both straight and angle patterns available.
- 100% factory tested.

SBV30G Series

Direction Indicator Handle
- Indicate position of orifice.

One-piece Ball Stem
- Ensure alignment of stem and orifice.

Top-loaded Design
- Easy packing adjustment with the valve in-line.

Trunnion Design
- Reduce packing volume and minimize thermal effects.
- Support packing and minimize packing extrusion.

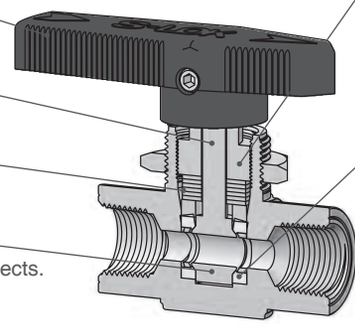

Live-loaded Design
- Reduce need for packing adjustment.
- Wear compensation.
- Improved performance for thermal cycle.

Encapsulated One-piece Seat
- Potential leakage point reduction.
- No system pressure required for sealing.
- Virtually no dead space.
- Bidirectional flow.
- Easy cleaning and purging.

Materials of Construction

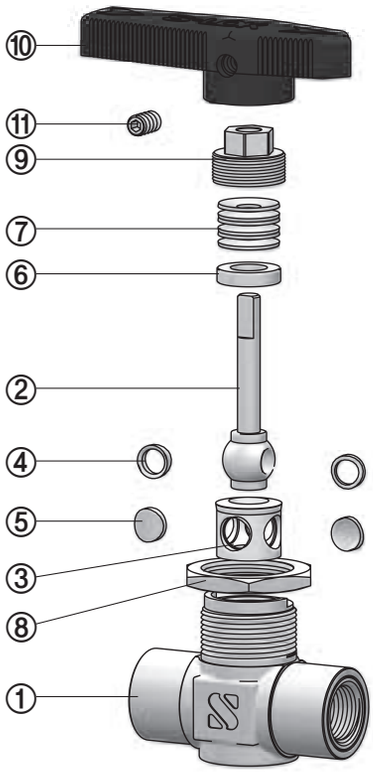

No	Component	Body Material	
		Stainless Steel	Brass
1	Body	SS316 / A182	Brass / B16
2	Ball Stem	SS316 / A276	SS316/A276
3	Seat	Modified PTFE	Modified PTFE
4	Side Ring	Fluorocarbon Coated SS316	Fluorocarbon Coated SS316
5	Side Disc	Fluorocarbon Coated SS316	Fluorocarbon Coated SS316
6	Gland	SS316 / A276	SS316 / A276
7	Disc Spring	Stainless Steel 301	Stainless Steel 301
8	Panel Nut	SS316 / A276	Brass / B16
9	Packing Bolt	SS316 / A276	SS316 / A276
10	Handle	Black Nylon with Brass Insert	Black Nylon with Brass Insert
11	Set Screw	SS304	SS304

Pressure Ratings

Valve Series	2-Way Straight	2-Way Angle & 3-Way Switching	Temperature Range
SBV1G	2500psig (172bar)	2500psig (172bar)	-54˚C to 148˚C -65˚F to 300˚F
SBV2G	3000psig (206bar)	2500psig (172bar)	
SBV3G	2500psig (172bar)	1500psig (103bar)	
SBV4G	2500psig (172bar)	1500psig (103bar)	

SBV30 Series

Direction Indicator Handle
- Indicate position of orifice.

One-piece Ball Stem
- Ensure alignment of stem and orifice.

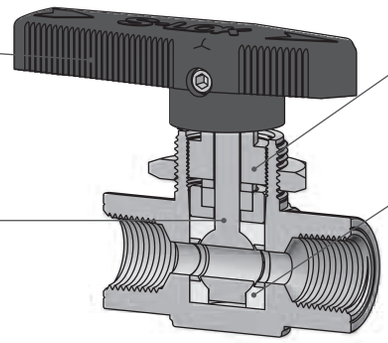

Top-loaded Design
- Easy packing adjustment with the valve in-line.

Two-piece Capsule Seat
- Constructed of PTFE.
- No system pressure required for sealing.
- Virtually no dead space.
- Bidirectional flow.
- Easy cleaning and purging.

Materials of Construction

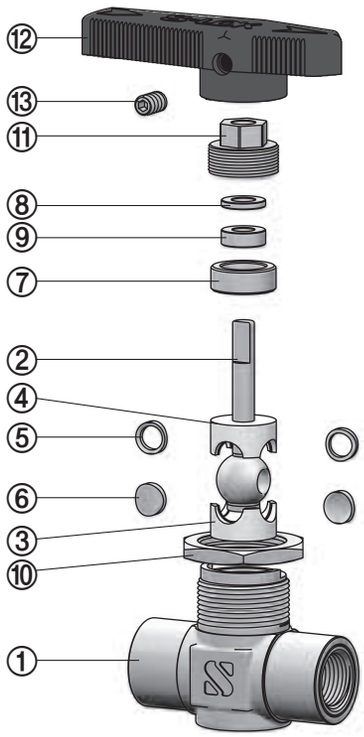

No	Component	Body Material	
		Stainless Steel	Brass
1	Body	SS316 / A182	Brass / B16
2	Ball Stem	SS316 / A276	SS316/A276
3	Lower Seat	PTFE	PTFE
4	Upper Seat	PTFE	PTFE
5	Side Ring	Fluorocarbon Coated SS316	Fluorocarbon Coated SS316
6	Side Disc	Fluorocarbon Coated SS316	Fluorocarbon Coated SS316
7	Lower Gland	SS316 / A276	Brass / B16
8	Upper Gland	SS316 / A276	SS316 / A276
9	Packing	PTFE	PTFE
10	Panel Nut	SS316 / A276	Brass / B16
11	Packing Bolt	SS316 / A276	Brass / B16
12	Handle	Black Nylon with Brass Insert	Black Nylon with Brass Insert
13	Set Screw	SS304	SS304

Pressure Ratings

Valve Series	2-Way Straight	2-Way Angle & 3-Way Switching	Temperature Range
SBV1	2500psig (172bar)	2500psig (172bar)	10˚C to 65˚C 50˚F to 150˚F
SBV2	3000psig (206bar)	2500psig (172bar)	
SBV3	2500psig (172bar)	1500psig (103bar)	
SBV4	2500psig (172bar)	1500psig (103bar)	

SBVP Series

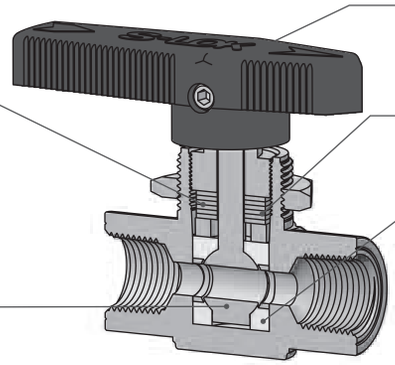

Direction Indicator Handle
- Indicate position of orifice.

Live-loaded Design
- Reduce need for packing adjustment.
- Wear compensation.
- Improved performance for thermal cycle.

Top-loaded Design
- Easy packing adjustment with the valve in-line.

Two-piece Capsule Seat
- Constructed of PFA.
- No system pressure required for sealing.
- Virtually no dead space.
- Bidirectional flow.
- Easy cleaning and purging.

One-piece Ball Stem
- Ensure alignment of stem and orifice.

Materials of Construction

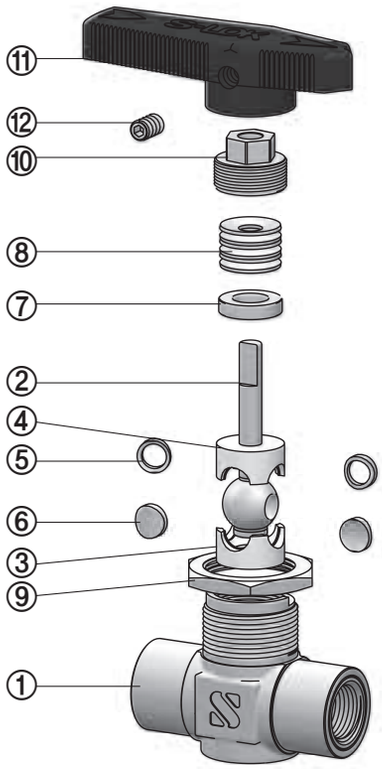

No	Component	Body Material	
		Stainless Steel	Brass
1	Body	SS316 / A182	Brass / B16
2	Ball Stem	SS316 / A276	SS316 / A276
3	Lower Seat	PFA	PFA
4	Upper Seat	PFA	PFA
5	Side Ring	Fluorocarbon Coated SS316	Fluorocarbon Coated SS316
6	Side Disc	Fluorocarbon Coated SS316	Fluorocarbon Coated SS316
7	Gland	SS316 / A276	SS316 / A276
8	Disc Spring	Stainless Steel 301	Stainless Steel 301
9	Panel Nut	SS316 / A276	Brass / B16
10	Packing Bolt	SS316 / A276	Brass / B16
11	Handle	Black Nylon with Brass Insert	Black Nylon with Brass Insert
12	Set Screw	SS304	SS304

Pressure Ratings

Valve Series	2-Way Straight	2-Way Angle & 3-Way Switching	Temperature Range
SBVP1	2500psig (172bar)	2500psig (172bar)	-54˚C to 65˚C -65˚F to 150˚F
SBVP2	3000psig (206bar)	2500psig (172bar)	
SBVP3	2500psig (172bar)	1500psig (103bar)	
SBVP4	2500psig (172bar)	1500psig (103bar)	

Dimensions & Flow Rate

2-Way (Shut-off Valves)

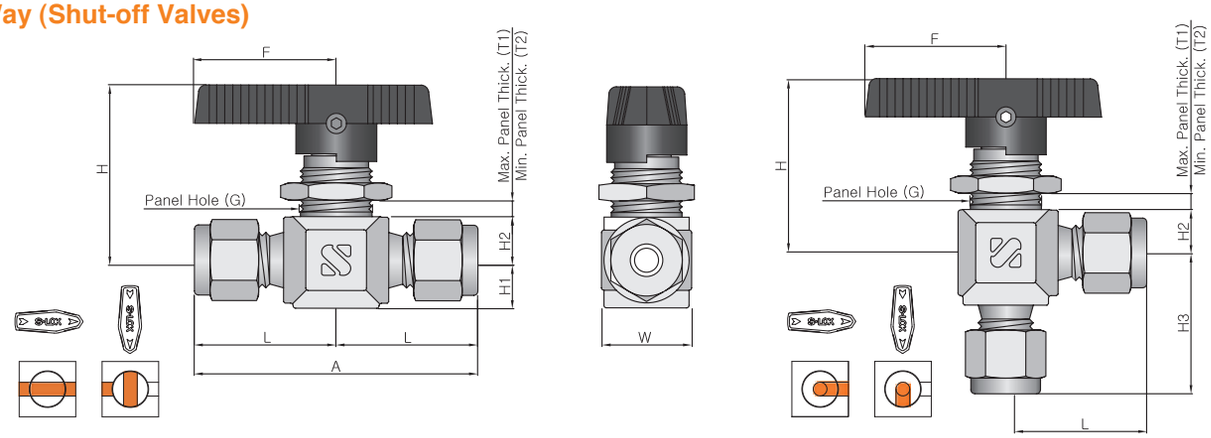

Ordering Number		Orifice		Cv		End Connections		Dimensions (mm)										
		mm	inch	Inline	Angle	Inlet	Outlet	A	L	H3	H2	H1	F	T1	T2	G	H	W
SBV1	S-1T	1.3	0.052	0.1	-	1/16″ S-LOK		42.7	21.3	-	8.6	9.5	28.4	6.4	2.0	15.1	34.5	18
	S-2T	2.4	0.093	0.2	0.15	1/8″ S-LOK		51.1	25.6	24.6								
	S-3M			0.2	0.15	3mm S-LOK		51.1	25.6	24.6								
	S-4T	3.2	0.125	0.6	0.35	1/4″ S-LOK		56.1	28.1	27.2								
	S-6M			0.6	0.35	6mm S-LOK		56.1	28.1	27.2								
	F-2N			0.5	0.3	1/8″ Female NPT		41.1	20.6	20.6								
SBV2	S-4T	4.8	0.187	1.4	0.9	1/4″ S-LOK		59.9	30.0	29.7	11.2	11	38.9	4.8	2.5	19.8	39.6	21
	S-6T			1.5	0.9	3/8″ S-LOK		65.5	32.8	32.8								
	S-6M			1.4	0.9	6mm S-LOK		60.7	30.4	29.7								
	S-8M			1.5	0.9	8mm S-LOK		62.5	31.2	30.5								
	F-2N			1.2	0.7	1/8″ Female NPT		50.8	25.4	25.4								
	F-4N			0.9	0.75	1/4″ Female NPT		52.3	26.2	26.2								
	M-4N			1.2	0.75	1/4″ Male NPT		50.8	25.4	26.2								
	F-4R			0.9	0.75	1/8″ Female PT		52.3	26.2	-								
SBV3	S-6T	7.1	0.281	6.0	2.0	3/8″ S-LOK		77.5	38.8	36.3	13.5	15.5	50.8	9.5	3.0	28.6	52.6	29
	S-10M			6.0	2.0	10mm S-LOK		78.0	38.9	36.9								
	S-8T			6.0	1.5	1/2″ S-LOK		83.1	41.6	39.1								
	F-4N			3.0	1.7	1/4″ Female NPT		63.5	31.8	31.8								
	F-6N			2.6	1.5	3/8″ Female NPT		63.5	31.8	31.8								
	F-6R			2.6	1.5	3/8″ Female PT		63.5	31.8	-								
SBV4	S-8T	10.3	0.406	12.0	4.6	1/2″ S-LOK		99.6	49.8	44.2	16.7	20.5	76.2	9.5	3.0	38.1	61.7	39
	S-12T			6.4	3.8	3/4″ S-LOK		99.6	49.8	44.2								
	S-12M			12.0	4.6	12mm S-LOK		99.6	49.8	44.2								
	F-8N			6.3	3.5	1/2″ Female NPT		79.2	39.6	39.6								
	F-8R			6.3	3.5	1/2″ Female PT		79.2	39.6	-								

Pressure Drop to Atmosphere (Δp), psi		Cv														
		0.1	0.2	0.5	0.6	0.9	1.2	1.5	1.6	2.4	2.6	3.0	6.0	6.3	6.4	12.0
Air SCFM @70˚(21˚C)	10	1.1	2.7	6.9	8.3	12.0	17.0	21.0	22.0	33.0	36.0	41.5	83.0	87.2	88.6	166.0
	50	3.0	7.6	19.1	23.0	34.0	46.0	57.0	61.0	92.0	99.5	115.0	230.0	241.0	245.0	459.0
	100	5.3	14.0	33.9	40.7	61.0	81.0	100.0	110.0	160.0	176.0	203.0	407.0	427.0	434.0	814.0
Water US GPM @70˚(21˚C)	10	0.3	0.6	1.6	1.9	2.8	3.7	4.7	5.0	7.5	8.2	9.5	19.0	19.9	20.2	37.9
	50	0.7	1.4	3.5	4.2	6.3	8.4	11.0	11.0	17.0	18.4	21.2	42.3	44.5	45.3	84.9
	100	1.0	2.0	5.0	6.0	9.0	12.0	15.0	16.0	24.0	26.0	30.0	60.0	63.0	64.0	120.0

3-Way (Switching Valves)

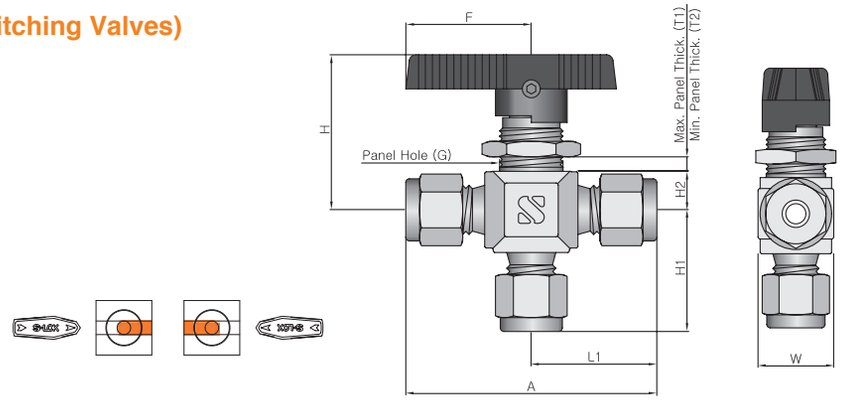

Ordering Number		Orifice mm	Orifice inch	Cv	End Connections	Dimensions (mm) A	L1	H1	H2	F	T1	T2	G	H	W
SBV1-3B	S-1T	1.3	0.052	0.08	1/16″ S-LOK	42.7	21.3	20.6	8.6	28.7	6.4	2.0	15.1	34.5	18
	S-2T	2.4	0.093	0.15	1/8″ S-LOK	51.1	25.6	24.6							
	S-3M			0.15	3mm S-LOK	51.1	25.6	24.6							
	S-4T	3.2	0.125	0.35	1/4″ S-LOK	56.1	28.1	27.2							
	S-6M			0.35	6mm S-LOK	56.1	28.1	27.2							
	F-2N			0.3	1/8″ Female NPT	41.1	20.6	20.6							
SBV2-3B	S-4T	4.8	0.187	0.9	1/4″ S-LOK	60.7	30.4	29.7	11.2	38.9	4.8	2.5	19.8	39.6	21
	S-6M			0.9	6mm S-LOK	60.7	30.4	29.7							
	S-8M			0.9	8mm S-LOK	62.5	31.2	30.5							
	F-4N			0.75	1/4″ Female NPT	52.3	26.2	26.2							
	F-4R			0.75	1/4″ Female PT	52.3	26.2	26.2							
SBV3-3B	S-6T	7.1	0.281	2.0	3/8″ S-LOK	73.4	36.7	36.3	13.5	50.8	9.5	3.0	28.6	52.6	29
	S-10M			2.0	10mm S-LOK	73.4	36.7	36.3							
	F-4N			1.7	1/4″ Female NPT	63.5	31.8	31.8							
	F-6N			1.5	3/8″ Female NPT	63.5	31.8	31.8							
	F-6R			1.5	3/8″ Female PT	63.5	31.8	31.8							
SBV4-3B	S-8T	10.3	0.406	4.6	1/2″ S-LOK	88.4	44.2	44.2	16.7	76.2	9.5	3.0	38.1	61.7	39
	S-12T			3.8	3/4″ S-LOK	88.4	44.2	44.2							
	S-12M			4.6	12mm S-LOK	88.4	44.2	44.2							
	F-8N			3.5	1/2″ Female NPT	79.5	39.8	39.6							
	F-8R			3.5	1/2″ Female PT	79.5	39.8	39.6							

Pressure Drop to Atmosphere (Δp), psi		Cv 0.08	0.15	0.3	0.35	0.75	0.8	0.9	1.5	1.7	2.0	3.5	3.8	4.6
Air SCFM @70˚F(21˚C)	10	0.9	2.0	4.2	4.8	10.0	11.0	12.0	20.8	23.5	27.7	48.4	52.6	63.7
	50	2.4	5.7	11.5	13.4	29.0	31.0	34.0	57.4	65.0	76.5	134.0	145.0	176.0
	100	4.3	10.1	20.3	23.7	51.0	54.0	61.0	102.0	115.0	136.0	237.0	258.0	312.0
Water US GPM @70˚F(21˚C)	10	0.3	0.4	0.9	1.1	2.3	2.5	2.8	4.7	5.4	6.3	11.1	12.0	14.5
	50	0.6	1.0	2.1	2.5	5.3	5.6	6.3	10.6	12.0	14.1	24.7	26.9	32.5
	100	0.8	1.5	3.0	3.5	7.5	8.0	9.0	15.0	17.0	20.0	35.0	38.0	46.0

Pressure Rating with PTFE(Standard) & PFA Seat

Valve Designator	Pressure Rating: 2-Way Straight	2-Way Angle	3-Way Switching	Temperature Range: PTFE	PFA
SBV1	2500psig (172 bar)			50˚ to 150˚F (10˚C to 65˚C)	-65˚ to 150˚F (-54˚C to 65˚C)
SBV2	3000psig (206 bar)	2500psig (172 bar)			
SBV3	2500psig (172 bar)	1500psig (103 bar)			
SBV4					

4-Way / 6-Way Type

- Crossover of two streams.
- Machined stops provide positive port positioning.

Valve Designator	Pressure Rating	Temperature Range	
		PTFE	PFA
SBV2-4W-F-2N	2500psig (172 bar)	50˚F to 150˚F (10˚C to 65˚C)	-65˚F to 150˚F (-54˚Cto 65˚C)
SBV4-4W-F-8N	1500psig (103 bar)		
SBV2-6W-S-1T	500psig (34.4 bar)		
SBV2-6W-S-2T			
SBVP2-4W-F-2N	2500psig (172 bar)		
SBVP4-4W-F-8N	1500psig (103 bar)		
SBVP2-6W-S-1T	500psig (34.4 bar)		
SBVP2-6W-S-2T			

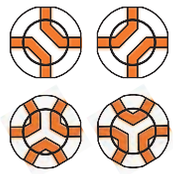

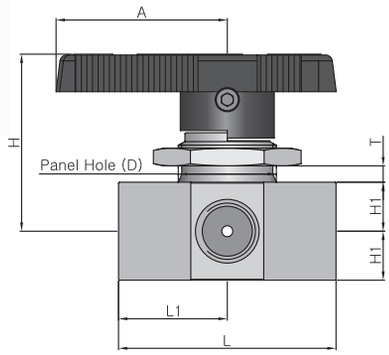

- T : Maximum panel thickness.
- D : Panel Hole

Ordering Number	Orifice		Cv	End Connections	Dimensions (mm)						
	mm	inch			L	L1	H	H1	A	T	D
SBV2-4W-F-2N	1.6	0.062	0.08	1/8″ Female NPT	40.0	20.0	44.2	11.1	38.8	4.8	23.0
SBV4-4W-F-8N	7.1	0.281	1.6	1/2″ Female NPT	79.5	39.6	61.7	17.5	76.2	9.7	38.1
SBV2-6W-S-1T	1.3	0.052	0.06	1/16″ S-LOK	50.0	24.6	44.2	11.2	38.9	4.8	23.1
SBV2-6W-S-2T	1.6	0.062	0.08	1/8″S-LOK							

5-Way / 7-Way Type

- Flow can be switched from a single port to multiple ports or from multiple ports to a single port.
- 5-Way series valves have a spring-loaded detent for exact port positioning.

Valve Designator	Pressure Rating	Temperature Range	
		PTFE	PFA
SBV2-5W-F-2N	2500psig (172 bar)	50˚F to 150˚F (10˚C to 65˚C)	-65˚F to 150˚F (-54˚C to 65˚C)
SBV2-5W-F-2G			
SBV4-5W-F-8N	1500psig (103 bar)		
SBV2-7W-S-1T	500psig (34.4 bar)		
SBV2-7W-S-2T			
SBVP2-5W-F-2N	2500psig (172 bar)		
SBVP2-5W-F-2G			
SBVP4-5W-F-8N	1500psig (103 bar)		
SBVP2-7W-S-1T	500psig (34.4 bar)		
SBVP2-7W-S-2T			

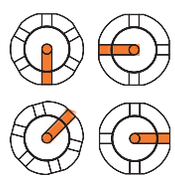

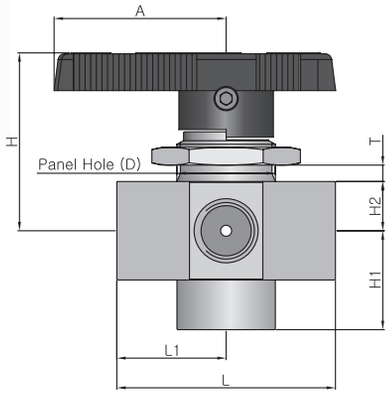

- T : Maximum panel thickness.
- D : Panel Hole

Ordering Number	Orifice		Cv	End Connections	Dimensions (mm)							
	mm	inch			L	L1	H	H1	H2	A	T	D
SBV2-5W-F-2N	1.6	0.062	0.07	1/8″ Female NPT	40.0	20.0	44.2	22.3	11.1	38.8	4.1	23.0
SBV2-5W-F-2G	1.6	0.062	0.07	1/8″ Female PF								
SBV4-5W-F-8N	10.3	0.406	3.5	1/2″ Female NPT	79.5	39.6	61.7	17.5	76.2	76.2	9.7	38.1
SBV2-7W-S-1T	1.3	0.052	0.05	1/16″ S-LOK	50.0	24.6	44.2	24.6	11.2	38.9	4.1	23.1
SBV2-7W-S-2T	1.6	0.062	0.07	1/8″ S-LOK								

Packing Adjustment

- SBV30 Valves are designed to control fluid in full open and closed position ; using SBV30 valves to throttle the flow may reduce the valve life.
- Every valves are factory adjusted for 1000psig service at 21˚C (70˚F).
- For use in higher pressure, the packing must be readjusted.
- Exposure of valves to varying temperature can affect the initial packing load. You may need check leak and readjust packing bolt.
- Packing adjustment may be required during the valve in service.

Testing

- Every valve is tested for bubble-tight leakage at both seat and stem packing with Nitrogen @ 1000psig (69bar).
- Seats have a maximum allowable leak rate of 0.1(SCCM).
- Optional tests are available upon request.

Ordering Information

SBV1	S	4T	A	G	S6
Valve Series	Connection Type	Connection Size	Flow Pattern	Handle Color	Body Material
• **SBV1** • **SBV2** • **SBV3** • **SBV4** SBV30 Series • **SBV1G** • **SBV2G** • **SBV3G** • **SBV4G** SBV30G Series • **SBVP1** • **SBVP2** • **SBVP3** • **SBVP4** SBV30P Series	• **S** : S-LOK • **M** : Male Thread • **F** : Female Thread	• **1T** : 1/6" Tube OD • **2T** : 1/8" Tube OD • **4T** : 1/4" Tube OD • **6T** : 3/8" Tube OD • **8T** : 1/2" Tube OD • **12T** : 3/4" Tube OD • **3M** : 3mm Tube OD • **6M** : 6mm Tube OD • **8M** : 8mm Tube OD • **10M** : 10mm Tube OD • **12M** : 12mm Tube OD • **2N** : 1/8" NPT • **4N** : 1/4" NPT • **6N** : 3/8" NPT • **8N** : 1/2" NPT	• **Nil** : 2-Way Straight • **A** : 2-Way Angle	• **Nil** : Black Nylon (Standard) • **B** : Blue Nylon • **G** : Green Nylon • **R** : Red Nylon • **Y** : Yellow Nylon	• **S6** : 316 Stainless Steel • **BS** : Brass

*To order 3-Way Switching Valves, select ordering number and add **-3B** to the valve series.

SBV60 Series High Pressure Ball Valves

Features

- Pressure rating up to 10000psig (689bar) @ 21˚C (70˚F).
- Temperature rating from -30˚C (-22˚F) to 180˚C (355˚F) with PCTFE seat or from -54˚C (-65˚F) to 260˚C (500˚F) with PEEK seat.
- Robust body is best suited for high pressure application and allows various pattern including.
  : 2-way straight pattern, 3-way side port inlet, 3-way bottom port inlet.
- Panel mounting and locking devices are available as option.
- Blow out proof design with internally loaded stem.
- Floating ball design ensures leak proof shut-off at high pressure.
- Straight through flow path for minimum pressure drop.
- Variety of end connections include reliable S-LOK tube fittings, male/female NPT & ISO/BSP threads.
- Handle with PVC color coated allows easy and quick operation with low torque.
- 90degree actuation.
- Every valve is 100% factory tested with the Nitrogen @ 1000psi (69bar).
- Optional sour gas service to NACE MR 0175.

Operation

- S-LOK SBV60 Series ball valves provide quick 1/4 turn on-off control of fluids in process, power and instrumentation applications.
- All ports are suitable as inlets in full operation pressure of the valve.
- A broad selection of valve body, seat, and seal materials provide a wide range of pressure and temperatures at which the valve may be used.
- Valves that have not been actuated for a period of time may have a higher actuation torque.

Materials of Construction

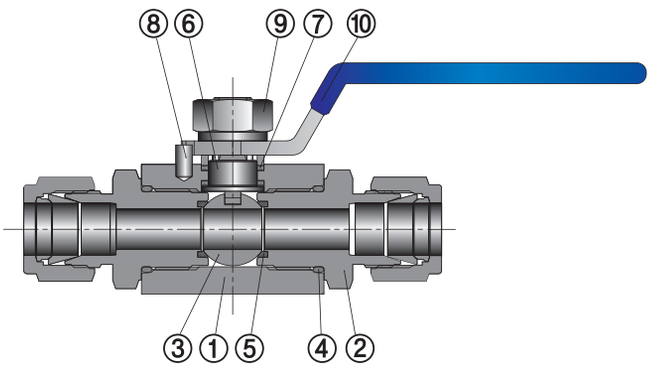

No	Component	Material
1	Body	SS316 / A479 or A276
2	End Connector	SS316 / A479 or A276
3	Ball	SS316 / A479 or A276
4	End Seal	FKM (VITON)
5	Seat	PCTFE (Optional PEEK)
6	Stem	SS316 / A479 or A276
7	Stem Packing	PTFE
8	Stop Pin	Stainless Steel
9	Hex Nut	Stainless Steel
10	Handle	Stainless Steel with PVC Coating

- Note : Wetted parts lubricant is fluorocarbon based.

Dimensions

2-Way

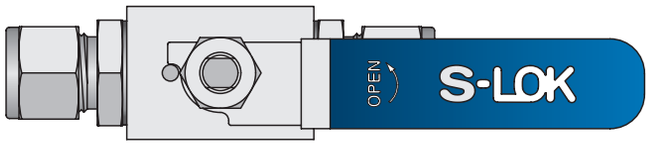

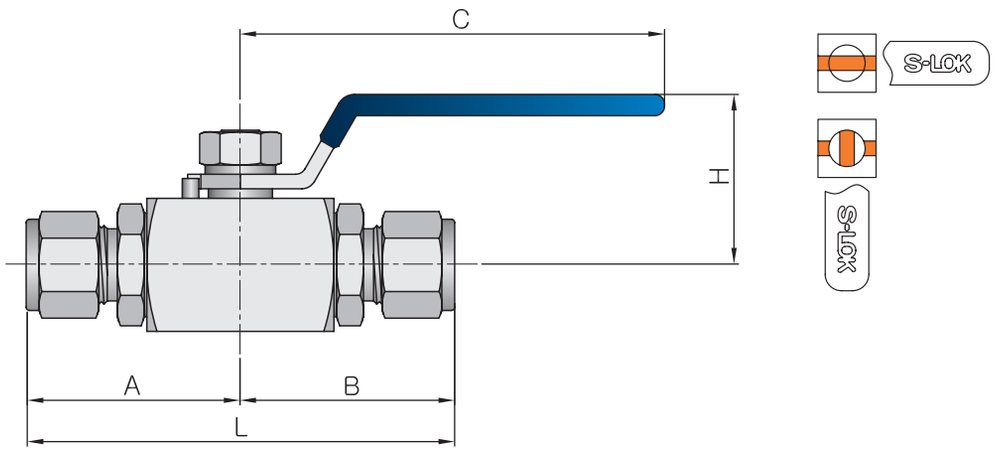

Ordering Number		Orifice		Cv	End Connections		Dimensions (mm)					
		mm	inch		Inlet	Outlet	A	B	L	H	C	S
SBV1H	S-4T	4.8	0.19	1.2	1/4″ S-LOK		46.0		92.0	39.0	101.0	32.0
	S-6T	7.1	0.28	3.7	3/8″ S-LOK		47.5		95.0			
	S-8T	10.0	0.39	7.5	1/2″ S-LOK		50.0		100.0			
	F-4N				1/4″ Female NPT		32.5		65.0			
	F-6N				3/8″ Female NPT		38.0		76.0			
	F-8N				1/2″ Female NPT		43.0		86.0			
	M-4N	7.1	0.28	3.7	1/4″ Male NPT		42.0		84.0			
	M-6N	9.7	0.38	7.2	3/8″ Male NPT		42.0		84.0			
	M-8N	10.0	0.39	7.5	1/2″ Male NPT		47.5		95.0			
SBV2H	S-10T	12.7	0.5	10.1	5/8″ S-LOK		55.5		111.0	51.0	135.0	40.0
	S-12T				3/4″ S-LOK		55.5		111.0			
	F-8N				1/2″ Female NPT		45.5		91.0			
	F-12N				3/4″ Female NPT		47.5		95.0			
	M-12N				3/4″ Male NPT		54.5		109.0			
SBV3H	S-12T	15.8	0.62	19.0	3/4″ S-LOK		58.5		117.0	56.0	135.0	50.0
	S-16T	19.0	0.75	30.0	1″ S-LOK		65.0		130.0			
	F-12N				3/4″ Female NPT		48.0		96.0			
	F-16N				1″ Female NPT		50.0		100.0			
	M-12N	15.8	0.62	19.0	3/4″ Male NPT		58.0		116.0			
	M-16N	19.0	0.75	30.0	1″ Male NPT		62.5		125.0			

3-Way Side Port (3S)

• 1/4 Turn handle for flow switching.

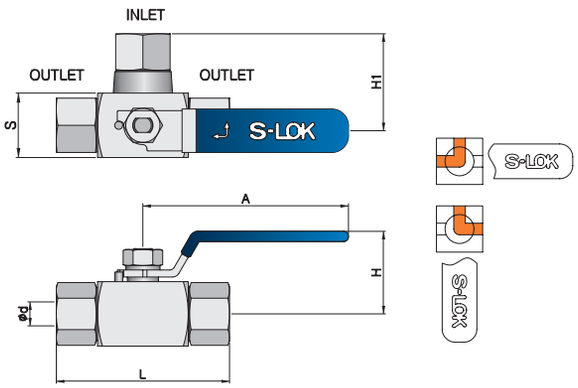

3-Way Bottom Port (3B)

• 1/2 Turn handle for flow switching and isolation.

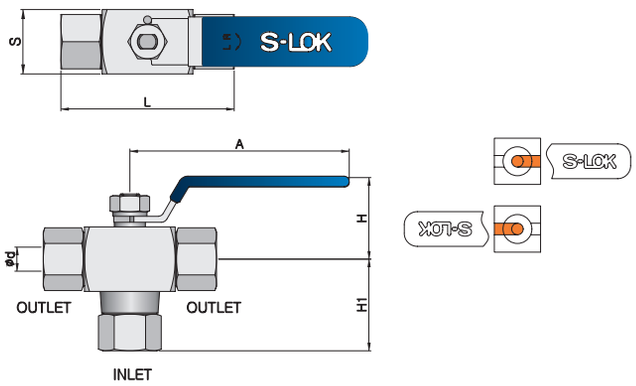

Ordering Number		Orifice		End Connections		Dimensions (mm)				
		mm	inch	Inlet	Outlet	A	H	H1	L	S
SBV1H-3B or SBV1H-3S	S-4T	4.8	0.19	1/4″ S-LOK		101.0	39.0	51.5	92.0	32.0
	S-6T	7.1	0.28	3/8″ S-LOK				53.0	95.0	
	S-8T	10.0	0.39	1/2″ S-LOK				55.8	100.0	
	F-4N			1/4″ Female NPT				36.7	65.0	
	F-6N			3/8″ Female NPT				40.2	76.0	
	F-8N			1/2″ Female NPT				45.5	86.0	
SBV2H-3B or SBV2H-3S	S-10T	12.7	0.5	5/8″ S-LOK		135.0	51.0	65.5	111.0	40.0
	S-12T			3/4″ S-LOK				65.5	111.0	
	F-8N			1/2″ Female NPT				49.7	91.0	
	F-12N			3/4″ Female NPT				55.2	95.0	
SBV3H-3B or SBV3H-3S	S-12T	15.8	0.62	3/4″ S-LOK		135.0	56.0	70.0	117.0	50.0
	S-16T	19.0	0.75	1″ S-LOK				76.6	130.0	
	F-12N			3/4″ Female NPT				56.7	96.0	
	F-16N			1″ Female NPT				60.8	100.0	

* '3S' for side port 3-way, '3B' for Bottom port 3-way.

Locking Nut Panel Mounting Oprion (PN)

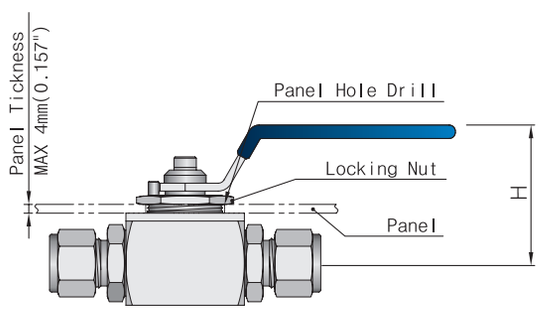

Valve Series	Panel Hole Drill	H	A	B	T
SBV1H	30.0(1.18)	49.9	34.0(1.33)	23.0(0.91)	M4
SBV2H	38.0(1.50)	64.5	36.0(1.42)	29.2(1.15)	M5
SBV3H	38.0(1.50)	69.3	40.0(1.57)	35.0(1.37)	M5

Screw Hole Panel Mounting Option (PS)

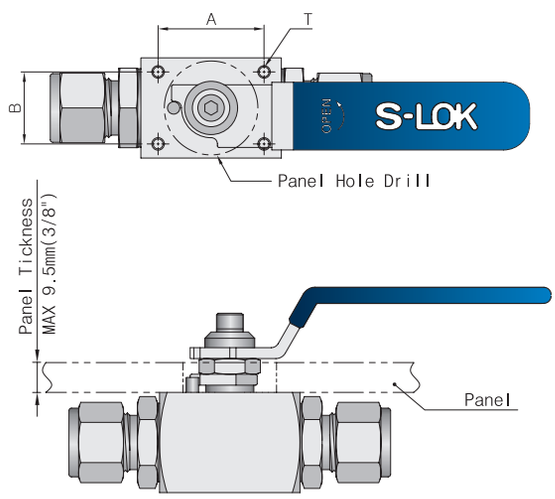

Technical Data

Pressure and Temperature Rating

Valve Series	Sealing Material			Pressure Rating @ 21°C(70°F)		Temperature Range
	Seat	Stem Packing	End Seal	2-Way	3-Way	
SBV1H	PCTFE	PTFE	FKM	6000psig (413 bar)	4000psig (275 bar)	-30 to 180˚C (-22 to 355˚F)
	PEEK			10000psig (689 bar)	6000psig (413 bar)	-54 to 260˚C (-65 to 500˚F)
SBV2H SBV3H	PCTFE	PTFE	FKM	5000psig (344 bar)	3000psig (206 bar)	-23 to 160˚C (-9 to 320˚F)
	PEEK			6000psig (413 bar)	4000psig (275 bar)	-35 to 210˚C (-31 to 410˚F)

- The above pressure rating is for 2-way In-line pattern valves. 80% of the above rating shall be applicable to 2-way angle pattern valves and 3-way valves.
- The rated pressure shown above is the maximum allowable pressure to the seat. If the system requires higher pressure to test, the valve must be in open position
  before and during test so as not to damage the seat.
- Pressure ratings of valves are sometimes limited to the maximum working pressure of pipe ends and tubing connected.
- The working pressure of tubing must be considered in the calculation of total system working pressure.

CNG / NGV Certifcations (SBVC Series)

- SBVC Series valve provides leak tight integrity in both low and high pressure systems in CNG & NGV applications.
- Valves with PEEK seat, HNBR O-ring and add Disc Spring are compatible with CNG fluid.

Certificates	ECE R110	ANSI NGV3.1-2012	ISO 15500
CERT. No.	E4-110R-010333	126840AUT14	12684MECH103
Classification	Class 0	P36	Manual Valve
Temperature Range	-40 to 120˚C (-40 to 248˚F)	-40 to 120˚C (-40 to 248˚F)	-40 to 120˚C (-40 to 248˚F)
Pressure Rating	260 bar	248 bar	260 bar

Testing

- Every valve is tested for bubble-tight leakage at both seat and stem packing with nitrogen @ 1000psig (69bar).
- Seats have a maximum allowable leak rate of 0.1(SCCM).
- Optional tests are available upon request.

Ordering Information

SBV1H	S	4T	PK	PN	S6
Valve Series	Connection Type	Connection Size	Seat Material	Option	Body Material

- **SBV*H** : Standard
- **SBV*H-3S** : Side port 3-way
- **SBV*H-3B** : Bottom port 3-way
- **SBVC*H** : CNG / NGV Service

- **Nil** : PCTFE (Standard)
- **PK** : PEEK

- **Nil** : Standard
- **PN** : Lock Nut Panel Mounting
- **PS** : Screw Hole Panel Mounting
- **LD** : Locking Device
- **OH** : Oval Handle (Applicable only for SBV1H)
- **SG** : Sour Gas Service

- **S6** : 316 Stainless Steel

Actuated Ball Valves (SBV60 Series)

Features

- Rack and pinion pneumatic actuator.
- Double acting and spring return mode.
- Operating Pressure : 3 ~ 8bar
- Rotating Angle : 90° ±3°
- Temperature Range : -20°C (-4°F) to 80°C (176°F).

Ordering Information and Dimensions

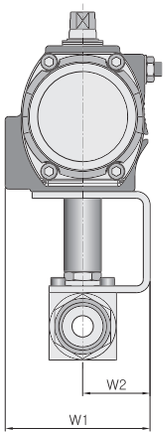

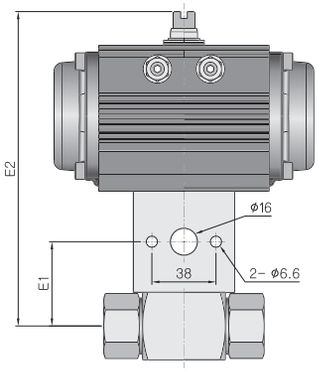

Valve Series	Dimensions (mm)			
	E1	E2	W1	W2
SBV1H	40.0	154.0	40.0	86.0
	40.0	154.0	40.0	86.0
SBV2H	50.0	186.5	40.0	86.0
	50.0	186.5	40.0	86.0
SBV3H	55.0	211.0	45.0	94.5
	55.0	211.0	45.0	94.5

SBV1H-S-4T — **PDA** — **40** — **S6**

Valve Basic Ordering Number

Actuator Type Designator
- **PDA** : Double Acting (Normal Close)
- **PNO** : Spring Return (Normal Open)
- **PNC** : Spring Return (Normal Close)

Actuator Series Designator
- **40** : R40 Actuator
- **50** : R50 Actuator(Standard for SBV1H)
- **65** : R65 Actuator(Standard for SBV2H)
- **80** : R80 Actuator(Standard for SBV3H)

Valve Material Designator
- **S6** : 316 Stainless Steel

Torque Table for SBV60 Series

Valve Series	Torque (N·m)					
	1000psig	2000psig	3000psig	4000psig	5000psig	6000psig
SBV1H	1.0	1.8	2.5	3.3	4.0	4.8
SBV2H	2.0	3.7	5.4	7.0	8.7	10.4
SBV3H	4.7	9.0	13.3	17.6	21.9	26.3

Actuator Dimensions

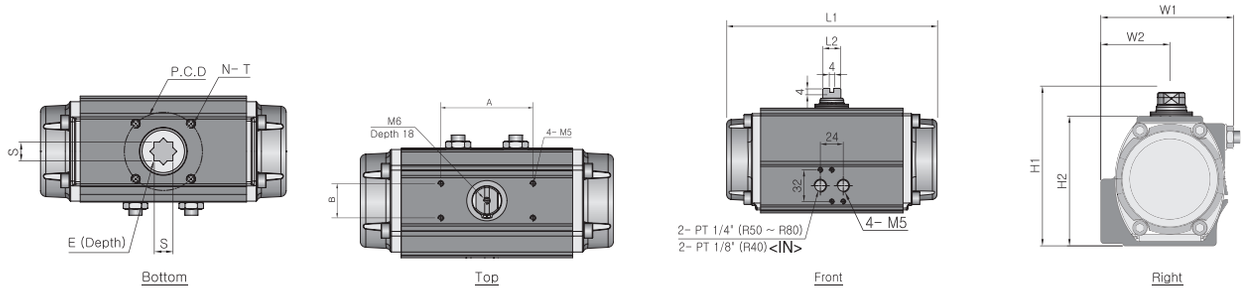

Actuator Series	ISO Flange Type	P.C.D	N- T	Dimensions (mm)										Weight (kg)	
				L1	L2	H1	H2	W1	W2	S	E	A	B	RD	RS
R40	F03/F05	36/50	4- M5/M6	97.0	9.0	75.0	55.0	63.0	32.0	9.0	9.0	50.0	25.0	0.5	0.6
	*F04	*42	*4- M5												
R50	F03/F05/F07	36/50/70	4- M5/M6/M8	133.0	9.0	90.0	70.0	75.0	40.0	11.0	13.0	80.0	30.0	1.0	1.1
	*F04	*42	*4- M5												
R65	F05/F07	50/70	4- M6/M8	154.0	13.0	106.5	86.5	89.0	46.0	14.0	16.0	80.0	30.0	1.4	1.5
	*F07	*70	*4- M8												
R80	F07	70	4- M8	220.0	19.0	126.0	106.0	101.0	49.5	17.0	19.0	80.0	30.0	2.9	3.3

* Option.

Torque Table for RD Series - Double Acting

Actuator Model	Supply Air (bar)						
	3	4	4.5	5	6	7	8
	Torque (N·m)						
RD40-AL	5.5	7.4	8.4	9.2	11.1	13.0	14.8
RD50-AL	9.4	12.5	14.3	15.9	19.1	22.5	25.8
RD65-AL	18.3	24.7	27.8	30.8	36.8	42.9	49.2
RD80-AL	44.5	58.9	66.5	74.4	89.3	104.3	117.8

Torque Table for RS Series - Spring Return

Actuator Model	Supply Air (bar) to Open															
	3		4		4.5		5		6		7		8		Spring to Close	
	0°	90°	0°	90°	0°	90°	0°	90°	0°	90°	0°	90°	0°	90°	0°	90°
	Torque (N·m)															
RS40-AL	1.0	-	2.9	0.5	3.8	1.2	4.8	2.1	6.7	3.8	8.6	5.1	10.5	6.4	5.9	3.9
RS50-AL	4.1	1.2	7.4	4.4	9.0	6.1	10.7	7.6	14.2	11.1	17.3	14.5	20.8	18.0	8.1	5.2
RS65-AL	4.1	1.2	8.7	3.6	14.7	9.5	17.9	12.5	21.1	15.7	27.2	22.0	33.3	28.1	13.7	8.4
RS80-AL	21.1	6.1	35.3	21.0	42.9	29.1	50.5	35.7	65.6	51.3	80.8	66.4	95.7	80.5	33.7	21.7

SFBV60 Series
High Pressure Forged Ball Valves

Features

- Pressure rating up to 6000psig (413bar) @ 21˚C (70˚F).
- Temperature rating from -54˚C (-65˚F) to 177˚C (350˚F) with standard PCTFE seat.
- Free floating ball design provides seat wear compensation, therefore ensures leak proof shut-off at high pressure.
- High flow in a compact design.
- Panel mountable as standard.
- Blow out proof design with internally loaded stem.
- Micro-finished ball provides a positive seal.
- Low operating torques and positive handle stops.
- Handle indicates flow direction.
- Straight through flow path for minimum pressure drop.
- Bi-directional flow.
- Chevron packing standard for positive leak tight.
- 90 degree actuation.
- Every valve is 100% factory tested with the Nitrogen @ 1000psi (69bar).
- Variety of end connections include reliable S-LOK tube fittings Male/Female NPT & ISO/BSP threads.

Applications

- Water, Oil, Gas, Petrochemical

Materials of Construction

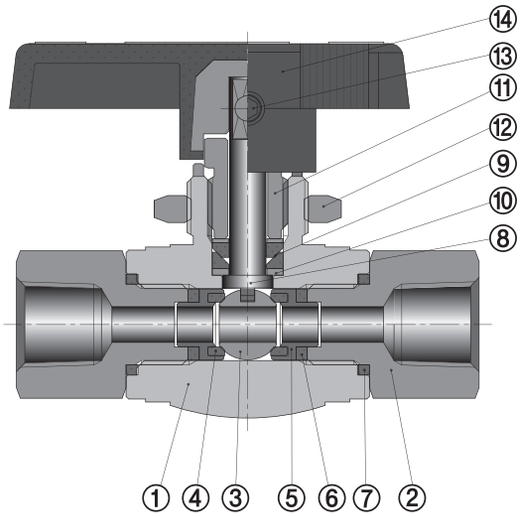

No	Component	Material
1	Body	A182 F316
2	End Connector	SS316 / A479 or A276
3	Ball	SS316 / A479 or A276
4	Seat	PCTFE (Optional PTFE,PEEK)
5	Retainer	SS316 / A479 or A276
6	Retainer Seal	PTFE
7	End Seal	PTFE
8	Stem	SS316 / A479 or A276
9	Stem Packing	PTFE
10	Stem Washer	Stainless Steel
11	Packing Bolt	SS316 / A479 or A276
12	Lock Nut	Stainless Steel
13	Set Screw	Stainless Steel
14	Handle	Black Nylon

- **Note** : Wetted parts lubricant is fluorocarbon based.

Dimensions & Flow Rate

2-Way (Shut-off Valves)

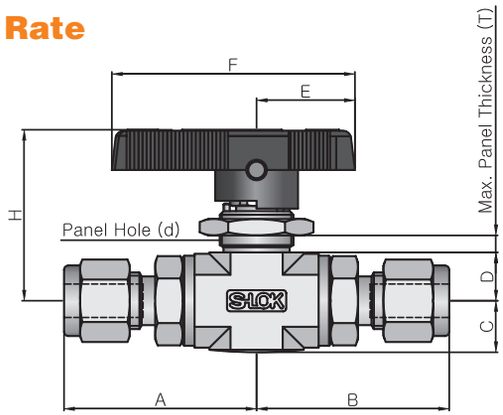

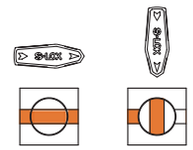

Ordering Number		Orifice		Cv	End Connections		Dimensions (mm)								
		mm	inch		Inlet	Outlet	A	B	C	D	E	F	H	d	T
SFBV1	S-1T	1.3	0.052	0.06	1/16″ S-LOK		33.0		10.0	9.4	19.0	47.0	33.2	16.3	3.3
	S-2T	2.4	0.093	0.21	1/8″ S-LOK		34.5								
	F-2N	4.2	0.165	0.93	1/8″ Female NPT		27.2								
	M-2N				1/8″ Male NPT		29.9								
	S-4T				1/4″ S-LOK		37.6								
	M-4N				1/4″ Male NPT		34.3								
	S-3M	2.2	0.086	0.18	3mm S-LOK		34.8								
SFBV2	S-2T	2.4	0.093	0.26	1/8″ S-LOK		41.9		10.7	11.9	25.6	78.0	49.6	19.6	6.4
	S-4T	4.8	0.189	1.04	1/4″ S-LOK		44.2								
	MS-4N-4T				1/4″ Male NPT	1/4″ S-LOK	44.2	41.1							
	FS-4N4T				1/4″ Female NPT	1/4″ S-LOK		38.4							
	F-4N	6.4	0.25	2.34	1/4″ Female NPT		38.4								
	M-4N				1/4″ Male NPT		41.1								
	MF-4N				1/4″ Male NPT	1/4″ Female NPT	38.4	41.1							
	MS-4N6T				1/4″ Male NPT	3/8″ S-LOK	45.7	41.1							
	FS-4N6T				1/4″ Female NPT	3/8″ S-LOK		38.4							
	S-6T				3/8″ S-LOK		45.7								
	M-6N				3/8″ Male NPT		41.1								
	S-6M	4.8	0.189	1.04	6mm S-LOK		44.5								
	S-8M	6.4	0.25	2.34	8mm S-LOK		45.2								
	S-10M				10mm S-LOK		46.0								
SFBV3	F-6N	10.3	0.406	6.42	3/8″ Female NPT		49.5		17.5	17.8	38.1	99.0	62.9	22.9	9.7
	F-8N				1/2″ Female NPT		54.6								
	S-8T				1/2″ S-LOK		59.4								
	M-8N				1/2″ Male NPT		56.4								
	S-12T				3/4″ S-LOK		59.2								
	S-12M	9.5	0.375	5.57	12mm S-LOK										
	S-16M	10.3	0.406	6.42	16mm S-LOK										

Pressure Drop to Atmosphere (Δp), psi		Cv								
		0.06	0.18	0.21	0.26	0.93	1.04	2.34	5.57	6.42
Air SCFM @70˚F(21˚C)	10	5.9	17.7	20.7	25.6	91.5	102.4	230.3	548.2	631.9
	50	13.2	39.6	46.2	57.2	204.7	228.9	515.0	1225.9	1413.0
	100	18.7	56.0	65.4	80.9	289.5	323.7	728.3	1733.7	1998.3
Water US GPM @70˚F(21˚C)	10	0.2	0.6	0.7	0.8	2.9	3.3	7.4	17.6	20.3
	50	0.4	1.3	1.5	1.8	6.6	7.4	16.5	39.4	45.4
	100	0.6	1.8	2.1	2.6	9.3	10.4	23.4	55.7	64.2

* Flow rate calculated with 1000psig (69 bar) inlet pressure.
* To determine ㎥/hr multiply GPM by SCFM by 1.69.

3-Way (Switching Valves)

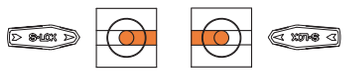

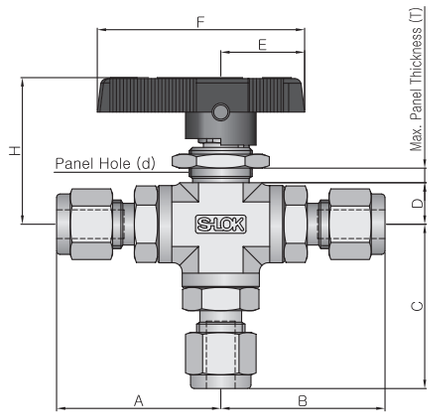

3-Way ball valve

SFBV 3-way ball valve is designed to switch media through the bottom port and direct it to out of two outlet ports.

Ordering Number		Orifice		Cv	End Connections		Dimensions (mm)								
		mm	inch		Inlet	Outlet	A	B	C	D	E	F	H	d	T
SFBV1-3B	S-1T	1.3	0.052	0.06	1/16″ S-LOK		33.0		33.7	8.5	19.0	47.0	33.2	16.3	3.3
	S-2T	2.4	0.093	0.21	1/8″ S-LOK		34.5		36.4						
	F-2N	4.2	0.165	0.63	1/8″ Female NPT		27.2		29.9						
	M-2N				1/8″ Male NPT		29.9		29.9						
	S-4T				1/4″ S-LOK		37.6		37.2						
	M-4N				1/4″ Male NPT		34.3		29.9						
	S-3M	2.2	0.086	0.18	3mm S-LOK		34.8		36.4						
SFBV2-3B	S-2T	2.4	0.093	0.21	1/8″ S-LOK		41.9		45.5	11.9	25.6	78.0	49.6	19.6	6.4
	S-4T	4.8	0.189	0.7	1/4″ S-LOK		44.2		47.8						
	F-4N	5.0	0.196	0.87	1/4″ Female NPT		38.4		41.9						
	M-4N				1/4″ Male NPT		41.1		44.7						
	S-6T				3/8″ S-LOK		45.7		49.3						
	M-6N				3/8″ Male NPT		41.1		44.7						
	S-6M	4.8	0.189	0.7	6mm S-LOK		44.5		47.8						
	S-8M	5.0	0.196	0.87	8mm S-LOK		45.2		48.5						
	S-10M				10mm S-LOK		46.0		49.5						
SFBV3-3B	F-6N	10.3	0.406	3.62	3/8″ Female NPT		49.5		58.2	17.8	38.1	99.0	62.9	22.9	9.7
	F-8N				1/2″ Female NPT		54.6		63.2						
	S-8T				1/2″ S-LOK		59.4		68.1						
	M-8N				1/2″ Male NPT		56.4		65.8						
	S-12T				3/4″ S-LOK		59.2		68.1						
	S-12M	9.5	0.375	3.46	12mm S-LOK		59.2		67.8						
	S-16M	10.3	0.406	3.62	16mm S-LOK		59.2		65.5						

Pressure Drop to Atmosphere (Δp), psi		Cv										
		0.06	0.18	0.21	0.63	0.7	0.87	0.93	2.34	3.46	3.62	6.42
Air SCFM @70˚F(21˚)	10	5.9	17.7	20.7	62.0	68.9	85.6	91.5	230.3	340.6	356.3	631.9
	50	13.2	39.6	46.2	138.7	154.1	191.5	204.7	515.0	761.5	796.7	1413.0
	100	18.7	56.0	65.4	196.1	217.9	270.8	289.5	728.3	1077.0	1126.8	1998.3
Water US GPM @70˚F(21˚)	10	0.2	0.6	0.7	2.0	2.2	2.8	2.9	7.4	10.9	11.4	20.3
	50	0.4	1.3	1.5	4.5	4.9	6.2	6.6	16.5	24.5	25.6	45.4
	100	0.6	1.8	2.1	6.3	7.0	8.7	9.3	23.4	34.6	36.2	64.2

* Flow rate calculated with 1000psig (69 bar) inlet pressure.
* To determine ㎥/hr multiply GPM by 0.227 SCFM by 1.69.

Technical Data

Pressure and Temperature Rating

Seat Material	Pressure Rating @ 21˚C (70˚F)	Temperature Range	Pressure Rating @ Max. Temperature
PCTFE	6000psig (413 bar)	-54 to 177˚C (-65 to 350˚F)	1000psig (69 bar) @177˚C (350˚F)
PEEK	6000psig (413 bar)	-54 to 232˚C (-65 to 450˚F)	700psig (48 bar) @232˚C (450˚F)
PTFE	1500psig (103 bar)	-54 to 177˚C (-65 to 350˚F)	250psig (17.2 bar) @177˚C (350˚F)

* Pressure Rating with 3-way side ports of as inlet : 150psig (10bar)

CNG / NGV Certifications (SFBVC Series)

- SFBVC Series valve provides leak tight integrity in both low and high pressure systems in CNG & NGV applications.
- Valves with PEEK seat, HNBR O-ring and add Disc Spring are compatible with CNG fluid.

Certificates	ECE R110	ANSI NGV3.1-2012	ISO 15500
CERT. No.	E4-110R-010333	126840AUT14	12684MECH103
Classification	Class 0	P36	Manual Valve
Temperature Range	-40 to 120˚C (-40 to 248˚F)	-40 to 120˚C (-40 to 248˚F)	-40 to 120˚C (-40 to 248˚F)
Pressure Rating	260 bar	248 bar	260 bar

Testing

- Every valve is tested for bubble-tight leakage at both seat and stem packing with nitrogen at 1000psig (69bar).
- Seats have a maximum allowable leak rate of 0.1(SCCM).
- Optional tests are available upon request.

Ordering Information

SFBV1	S	4T	PK	SG	S6
Valve Series	Connection Type	Connection Size	Seat Material	Sour Gas	Body Material

- **SFBV** : 2-Way Straight
- **SFBV-3B** : 3-Way Switching
- **SFBVC** : CNG / NGV Service

- **Nil** : PCTFE (Standard)
- **PK** : PEEK
- **TE** : PTFE

- **Nil** : Standard
- **SG** : Sour Gas Service

- **S6** : 316 Stainless Steel
- **BS** : Brass

STBV60 Series Trunnion Ball Valves

Features

- Pressure rating up to 6000psig (413bar) @ 21°C (70°F).
- Maximum flow in a compact design.
- Panel mountable as standard.
- Handle indicates flow direction.
- Lower torque actuation.
- 2-way " Shut-up " and 3-way " Switching " type.
- Variety of end connections include reliable S-LOK tube fittings Male/Female NPT & ISO/BSP threads.
- Optional sour gas service to NACE MR 0175.
- Every valve is 100% factory tested with Nitrogen @ 1000psig (69bar).

Material of Construction

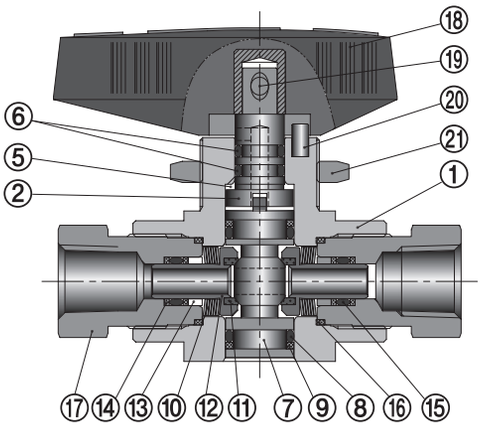

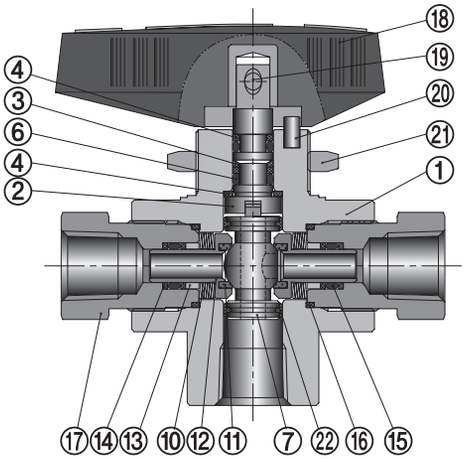

No	Component	Material	
		2-Way	3-Way
1	Body	SS316 / A479 or A276, A182	
2	*Stem	SS316 / A479 or A276	
3	*Stem Support Ring	-	PEEK
4	*Stem Backup Ring	-	PTFE
5	*Stem Bearing	PEEK	
6	*Stem O-ring	FKM	
7	*Trunnion Ball	SS316 / A479 or A276	
8	*Ball O-ring	FKM	-
9	*Ball Backup Ring	PTFE	-
10	*Disc Spring	Alloy X-750	
11	*Seat	PCTFE (Optional PTFE, PEEK)	
12	*Seat Carrier	Stainless Steel	
13	*Seat Carrier Guide	SS316 / A479 or A276	
14	*Seat Carrier Backup Ring	PTFE	
15	*Seat Carrier O-ring	FKM	
16	*Connector Seal	PTFE	
17	End Connector	SS316 / A479 or A276	
18	*Handle	Phenolic with Brass Insert	
19	*Set Screw	Stainless Steel	
20	Stop Pin	Stainless Steel	
21	Lock Nut	Stainless Steel	
22	*Slip Ring	-	PTFE

* Service kits contain part.

Dimensions

2-Way (Shut-off Valves)

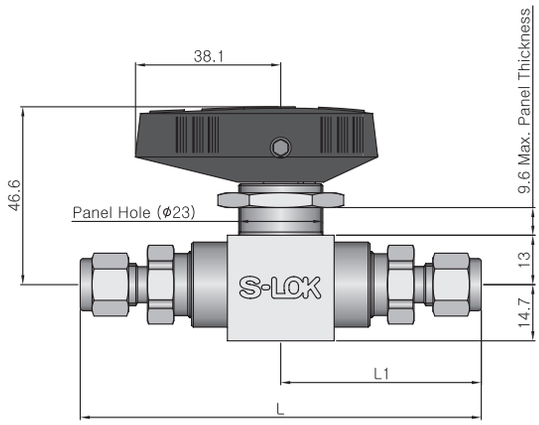

3-Way (Switching Valves)

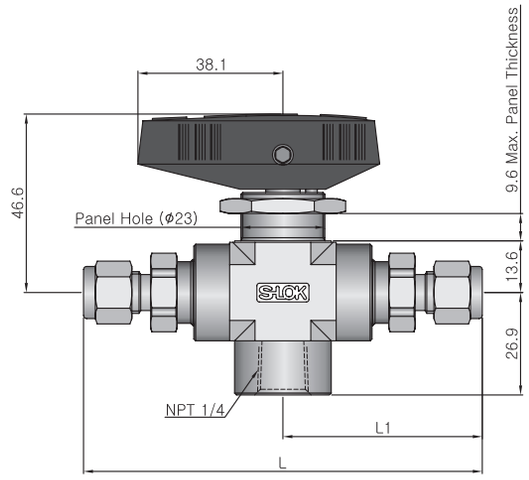

Ordering Number		Orifice		Cv	End Connections		Dimensions (mm)	
		mm	inch		Inlet	Outlet	L	L1
STBV	F-2N	4.75	0.187	1.2	1/8″ Female NPT		76.2	38.1
	F-4N			1.0	1/4″ Female NPT		76.2	38.1
	F-8N			1.2	1/2″ Female NPT		108.2	54.1
	S-4T			1.6	1/4″ S-LOK		105.2	52.6
	S-6T			1.4	3/8″ S-LOK		111.2	55.6
	S-8T			1.0	1/2″ S-LOK		116.8	58.4
	S-6M			1.6	6mm S-LOK		105.2	52.6
	S-8M			1.5	8mm S-LOK		105.2	52.6
	S-10M			1.3	10mm S-LOK		111.8	55.9
	S-12M			1.0	12mm S-LOK		116.8	58.4
STBV-3B	F-2N	4.75	0.187	0.75	1/8″ Female NPT		76.2	38.1
	F-4N				1/4″ Female NPT		76.2	38.1
	S-4T				1/4″ S-LOK		105.2	52.6
	S-6T				3/8″ S-LOK		111.2	55.6
	S-8T				1/2″ S-LOK		116.8	58.4
	S-6M				6mm S-LOK		105.2	52.6
	S-8M				8mm S-LOK		105.2	52.6
	S-10M				10mm S-LOK		111.8	55.9
	S-12M				12mm S-LOK		116.8	58.4

* Bottom port of all 3-way valves is 1/4″ Female NPT.

Technical Data

Pressure and Temperature Rating

Seat Material	Pressure Rating @21˚C (70˚F)	Temperature Range
PCTFE	6000psig (413 bar)	-17 to 121˚C (0 to 250˚F)
PEEK	6000psig (413 bar)	-17 to 232˚C (0 to 450˚F)
PTFE	1500psig (103 bar)	-17 to 232˚C(0 to 450˚F)

CNG / NGV Certifications (STBVC Series)

- STBVC Series valve provides leak tight integrity in both low and high pressure systems in CNG & NGV applications.
- Valves with PEEK seat and HNBR O-ring are compatible with CNG fluid.

Valve Series	Certificates	ECE R110	ANSI NGV3.1-2012	ISO 15500
STBVC / STBVC-3B	CERT. No.	E4-110R-010333	126840AUT14	12684MECH103
	Classification	Class 0	P36	Manual Valve
	Temperature Range	-40 to 120˚C (-40 to 248˚F)	-40 to 120˚C (-40 to 248˚F)	-40 to 120˚C (-40 to 248˚F)
	Pressure Rating	260 bar	248 bar	260 bar

Testing

- The rated pressure shown above is the maximum allowable pressure to the seat. If the system requires higher pressure to test, the valve must be in open position before and during test so as not to damage the seat.
- Every valve is tested for bubble-tight leakage at both seat and stem packing with nitrogen at 1000psig (69bar).
- Seats have a maximum allowable leak rate of 0.1(SCCM).
- Optional tests are available upon request.

Ordering Information

Product

STBV	S	4T	PK	MH	SG	S6
Valve Series	Connection Type	Connection Size	Seat Material	Handle	Sour Gas	Body Material

- **STBV** : 2-Way Straight
- **STBV-3B** : 3-Way Switching
- **STBVC** : CNG / NGV Service

- **Nil** : PCTFE for STBV PEEK for STBVC (Standard)
- **PK** : PEEK
- **TE** : PTFE

- **Nil** : Black Nylon
- **MH** : 316 Stainless Steel

- **Nil** : Without (Standard)
- **SG** : Sour Gas Service

- **S6** : 316 Stainless Steel

Service Kit

- Service kits contain components of the same materials as new components.
- To order the service kit selection of the applicable options from the designators are listed mark(*) of Material of Construction.

STBV	3B	SKIT	WHN	S6
Valve Series	Port Way	Service Kit	Handle Option	Body Material

- **STBV** : 2-Way Straight
- **STBVC** : CNG / NGV Service

- **Nil** : 2-Way Straight
- **3B** : 3-Way

- **Nil** : Standard
- **WHN** : Nylon Handle
- **WMH** : Metal Handle

- **S6** : 316 Stainless Steel

SDBV Series Ball Valves for DIN Standard

Features

- Pressure rating up to 500bar @ 21˚C.
- Temperature rating from -20˚C to 100˚C with POM and FKM standard.
- Conforms to DIN standard.
- Compact design with maximum orifice.
- Variety of end connections such as DIN2353 “L” & “S” series, Male/Female DIN / ISO / BSP and NPT threads.
- Handle is only available in cast stainless steel standard.
- Every valve is 100% factory tested with Nitrogen @ 1000psig (69bar).

Applications

- Hydraulic fluids, Compressed air, Lubricants and Fuel oil system

Materials of Construction

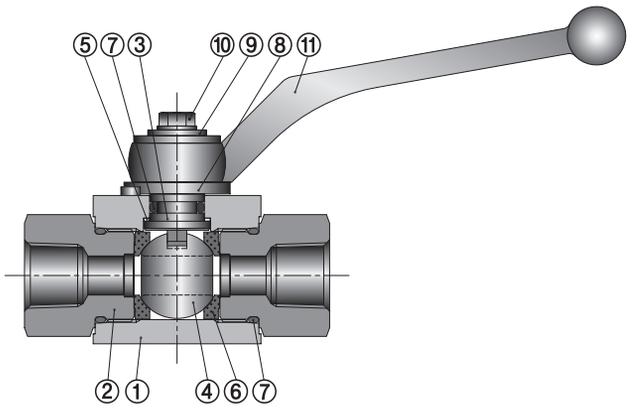

No	Component	Material
1	Body	SS316 / A479 or A276 DIN 17440 / 1.4401
2	End Connector	
3	Stem	
4	Ball	
5	Stem Bearing	PEEK
6	Ball Seat	POM (Optional PTFE)
7	Stem & End Seal	FKM
8	Locking Device	Stainless Steel
9	Upper Washer	Stainless Steel
10	Hex Bolt	Stainless Steel
11	Handle	A351 CF8M

Temperature Rating

Seal Material	Temperature Range
NBR	-23 to 121˚C
FKM	-23 to 200˚C
EPDM	-46 to 149˚C

Seat Material	Temperature Range
POM	-30 to 100˚C
PTFE	-54 to 65˚C

Testing

- Every valve is tested for bubble-tight leakage at both seat and stem packing with nitrogen @ 1000psig (69bar).
- Seats have a maximum allowable leak rate of 0.1(SCCM).
- Hydraulic shell test is performed at 1.5 times the working pressure.

Dimensions

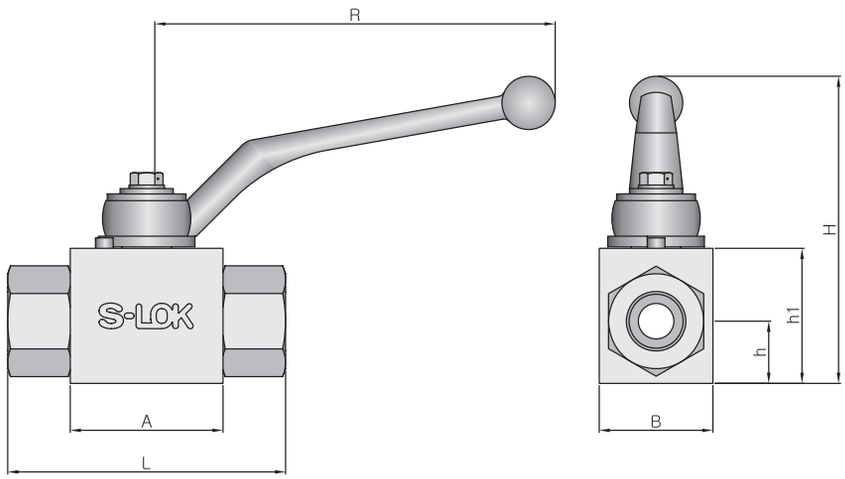

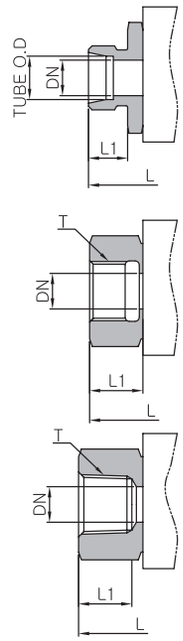

Tube connection
DIN 2353
Light Series (L)
Heavy Series (S

Female Thread
BSP
DIN / ISO 228

Female Thread
NPT
ASME B 1.20.1

DIN 2353 Light (L) Tube Series

Ordering Number		DN	PB	End Connections		Dimensions (mm)								Weight (kg)
				Inlet	Outlet	L	L1	A	B	H	h	h1	R	
SDBV1	6L	4	315	6mm		67.0	10.0	40.0	26.0	82.0	13.5	33.0	115.0	0.4
	8L	6		8mm		67.0	10.0							0.4
	10L	6		10mm		74.0	11.0							0.5
SDBV2	12L	10	315	12mm		74.0	11.0	43.0	32.0	87.0	17.5	38.0	115.0	0.6
SDBV3	15L	13	315	15mm		82.0	12.0	48.0	35.0	89.0	19.0	40.0	115.0	0.7
	18L	13		18mm		82.0	12.0							0.8
SDBV4	22L	20	160	22mm		101.0	14.0	62.0	49.0	114.0	24.5	57.0	159.0	2.1
SDBV5	28L	25	160	28mm		108.0	14.0	66.2	58.0	122.0	29.5	65.0	159.0	2.3
	35L	25		35mm		112.0	16.0							2.3

DIN 2353 Heavy (S) Tube Series

Ordering Number		DN	PB	End Connections		Dimensions (mm)								Weight (kg)
				Inlet	Outlet	L	L1	A	B	H	h	h1	R	
SDBV1	8S	4	500	8mm		73.0	12.0	40.0	26.0	82.0	13.5	33.0	115.0	0.4
	10S	6		10mm		73.0	12.0							0.4
SDBV2	12S	6	500	12mm		76.0	12.0	43.0	32.0	87.0	17.5	38.0	115.0	0.5
	14S	10		14mm		80.0	14.0							0.6
SDBV3	16S	13	400	16mm		86.0	14.0	48.0	35.0	89.0	19.0	40.0	115.0	0.7
	20S			20mm		90.0	16.0							0.8
SDBV4	25S	20	315	25mm		109.0	18.0	62.0	49.0	114.0	24.5	57.0	159.0	2.1
SDBV5	30S	25	315	30mm		120.0	20.0	66.2	58.0	122.0	29.5	65.0	159.0	2.3
	38S			38mm		124.0	22.0							2.3

Female BSP (DIN / ISO 228)

Ordering Number		DN	PB	End Connections		Dimensions (mm)								Weight (kg)
				Inlet	Outlet	L	L1	A	B	H	h	h1	R	
SDBV1	F-2G	6	500	PF 1/8″		68.8	10.0	40.0	26.0	82.0	13.5	33.0	115.0	0.4
	F-4G			PF 1/4″		68.8	14.0							0.4
SDBV2	F-6G	10	500	PF 3/8″		71.9	14.0	43.0	32.0	87.0	17.5	38.0	115.0	0.6
SDBV3	F-8G	13	500	PF 1/2″		82.3	16.5	48.0	35.0	89.0	19.0	40.0	115.0	0.7
SDBV4	F-12G	20	315	PF 3/4″		95.4	18.0	62.0	49.0	114.0	24.5	57.0	159.0	1.6
SDBV5	F-16G	25	315	PF 1″		112.7	20.0	66.2	58.0	122.0	29.5	65.0	159.0	2.3
SDBV6	F-20G	32	315	PF 1-1/4″		120.0	22.0	68.0	75.0	165.0	37.5	82.0	260.0	4.4
SDBV7	F-24G	38	315	PF 1-1/2″		130.0	24.0	85.0	95.0	182.0	47.5	99.1	260.0	6.8
SDBV8	F-32G	50	315	PF 2″		140.0	26.0	100.0	115.0	198.0	57.5	115.2	260.0	9.5

Female NPT (ASME B 1.20.1)

Ordering Number		DN	PB	End Connections		Dimensions (mm)								Weight (kg)
				Inlet	Outlet	L	L1	A	B	H	h	h1	R	
SDBV1	F-4N	6	500	NPT 1/4″		68.8	15.0	40.0	26.0	82.0	13.5	33.0	115.0	0.4
SDBV2	F-6N	10	500	NPT 3/8″		78.0	15.0	43.0	32.0	87.0	17.5	38.0	115.0	0.7
SDBV3	F-8N	13	500	NPT 1/2″		104.0	20.5	48.0	35.0	89.0	19.0	40.0	115.0	1.0
SDBV4	F-12N	20	315	NPT 3/4″		102.0	21.5	62.0	49.0	114.0	24.5	57.0	159.0	1.8
SDBV5	F-16N	25	315	NPT 1″		119.0	25.4	66.2	58.0	122.0	29.5	65.0	159.0	2.5
SDBV6	F-20N	32	315	NPT 1-1/4″		120.0	27.0	68.0	75.0	165.0	37.5	82.0	260.0	4.4
SDBV7	F-24N	38	315	NPT 1-1/2″		130.0	27.0	85.0	95.0	182.0	47.5	99.1	260.0	6.8
SDBV8	F-32N	50	315	NPT 2″		162.0	31.0	100.0	115.0	198.0	57.5	115.2	260.0	11.5

Ordering Information

SDBV1 — **F** — **4G** — **TE** — **NB** — **SG** — **S6**

Valve Series

Connection Type
- **Nil** : Din 2353 Bite
- **F** : Female Thread

Connection Size
- **2** : 1/8 ″
- **4** : 1/4 ″
- **6** : 3/8 ″
- **8** : 1/2 ″
- **12** : 3/4 ″
- **16** : 1 ″
- **20** : 1-1/4 ″
- **24** : 1-1/2 ″
- **32** : 2 ″

Seat Material
- **Nil** : POM (Standard)
- **PK** : PEEK
- **TE** : PTFE

Seal Material
- **Nil** : FKM (Standard)
- **NB** : NBR
- **EP** : EPDM

Sour Gas
- **Nil** : Without (Standard)
- **SG** : Sour Gas Service

Body Material
- **S6** : 316 Stainless Steel
- **CS** : Carbon Steel

SOBV Series Swing-Out Ball Valves

S-LOK Swing out Ball Valves(SOBV Series) are durable valves that can handle the pressure and piping loads.
The structure allows for quick and easy replacement of seats, seals and balls without a major disruption to the piping system.

Features

- Three-piece swing-out design & Spring-loaded seats design
- Actuator mounting design
- 100% Factory tested
- Temperature range from -20˚F(-28˚C) to 450˚F(232˚C)
- Pressure rating to seats

3000 psig(207bar) @ 100˚F(38˚C) : PEEK
2500 psig(172bar) @ 100˚F(38˚C) : Carbon Filled PTFE
2200 psig(151bar) @ 100˚F(38˚C) : Glass Filled PTFE (Standard)
1500 psig(103bar) @ 100˚F(38˚C) : Virgin PTFE

Pressure and Temperature Ratings

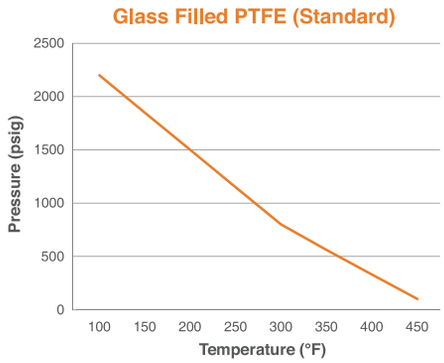

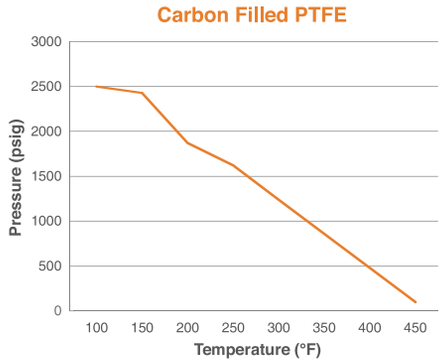

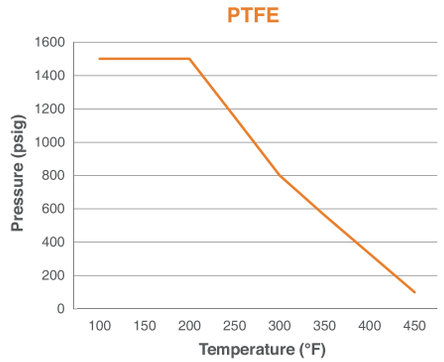

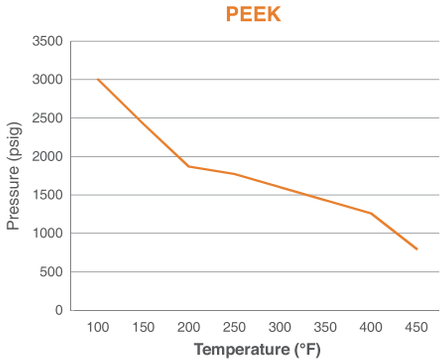

Testing

- Each swing-out ball valve is tested with Nitrogen@1,000 psig (69 bar) to max. leak rate of 0.1 (SSCM).
- Hydrostatic shell test is performed at 1.5 times the working pressure as an option.

Materials of Construction

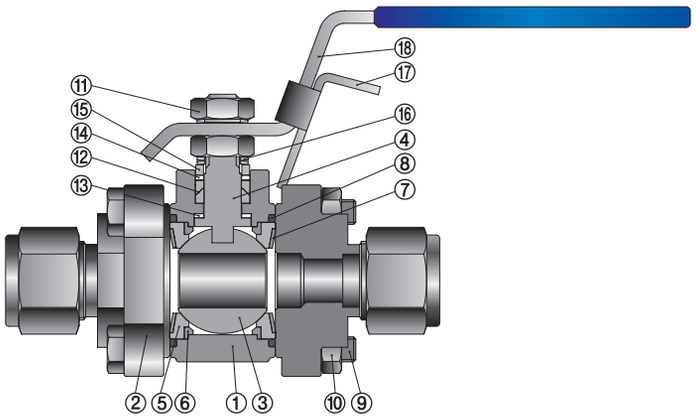

No	Part Name	Material
1	Body	CF8M / A351
2	End Connector	CF8M / A351
3	Ball	SS316 / A276 or A479
4	Stem	SS316 / A276 or A479
5	Ball Seat	Reinfoced PTFE
6	Support ring	SS316 / A276 or A479
7	Disc Spring	X-750
8	O-Ring	FKM
9	Hex Long Bolt	A193 B8M CL.2
10	Hex Nut	A194 8M
11	Stem Nut	Stainless Steel
12	Stem Packing	Reinfoced PTFE
13	Thrust Washer	PEEK
14	Bearing	PEEK
15	Packing Gland	SS316 / A276 or A479
16	Stem Spring	Stainless Steel
17	Locking Device	Stainless Steel
18	Bar Handle	Stainless Steel

NOTE

- Stainless steel is standard body material but such a Monel, Carbon steel, and other special material are available upon request

Ordering Information & Dimension

S-LOK Tube Fitting End

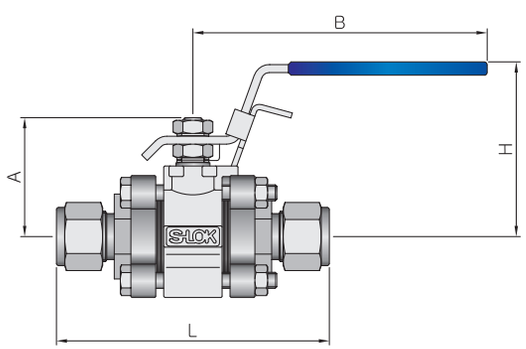

Ordering Number		Size	Cv	Orifice (mm)	Dimensions (mm)			
					A	B	L	H
SOBV1	S-4T	1/4	1.2	4.8	30.2	65	80.5	45.8
	S-6M	6mm						
	S-8M	8mm	2.5	6.4				
	S-6T	3/8	3.8	7.1				
	S-10M	10mm					81.4	
SOBV2	S-12M	12mm	7.5	9.5	44.8	110	103	64.8
	S-8T	1/2		10.3				
	S-12T	3/4	13.6	13.1				
	S-18M	18mm						
SOBV3	S-16T	1	40	22.2	62.2	150	136	81.6
	S-25M	25mm						
SOBV4	S-24T	1-1/2	100	31.8	78	210	193	105

Female Thread End

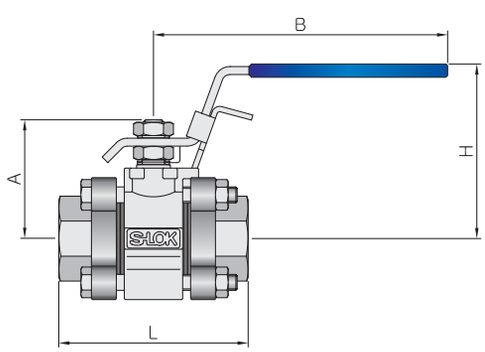

Ordering Number		Size	Cv	Orifice (mm)	Dimensions (mm)			
					A	B	L	H
SOBV1	F-2N	1/8 NPT	3.8	7.1	30.2	65	54.9	45.8
	F-4N	1/4 NPT						
SOBV2	F-6N	3/8 NPT	12	13.1	44.8	110	68.6	64.8
	F-8N	1/2 NPT						
SOBV3	F-12N	3/4 NPT	31	22.2	62.2	150	91.2	81.6
	F-16N	1 NPT	38					
SOBV4	F-20N	1-1/4 NPT	90	31.8	78	210	112	105
	F-24N	1-1/2 NPT	100					

Socket Weld End

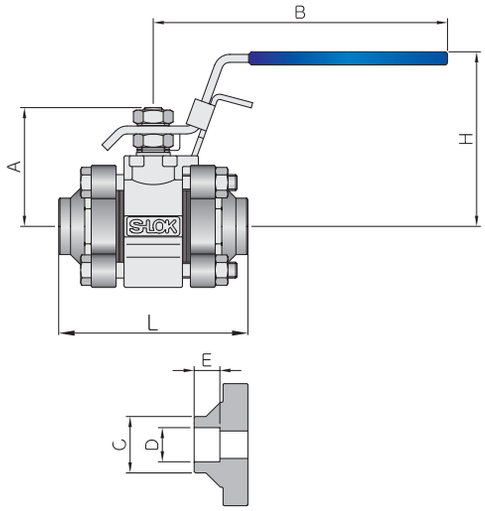

Ordering Number		Size	Cv	Orifice (mm)	Dimensions (mm)						
					A	B	C	D	E	L	H
SOBV1	SW-4T	1/4 Tube	1.2	4.8	30.2	65	13.7	6.5	7.1	54.9	45.8
	SW-6T	3/8 Tube	3.8	7.1			17.1	9.7	7.9		
SOBV2	SW-8T	1/2 Tube	7.5	10.4	44.8	110	21.3	12.9	9.7	68.6	64.8
	SW-12T	3/4 Tube	13.6	13.1			26.7	19.2	11.2		
	SW-8P	1/2 Pipe	15				31.2	21.8	9.7		
SOBV3	SW-12P	3/4 Pipe	36	22.2	62.2	150	39.2	27.2	12.7	91.2	81.6
	SW-16T	1 Tube	40				33.4	25.6	15.7		
	SW-16P	1 Pipe	42				46	33.9	12.7		
SOBV4	SW-20T	1-1/4 Tube	80	28.6	78	210	42.2	32	15.7	112	105
	SW-20P	1-1/4 Pipe	90	31.8			62.2	42.7	12.7	115	
	SW-24T	1-1/2 Tube	100					38.3	19.1	112	
	SW-24P	1-1/4 Pipe						48.8	12.7	116	

Pipe Butt Weld End

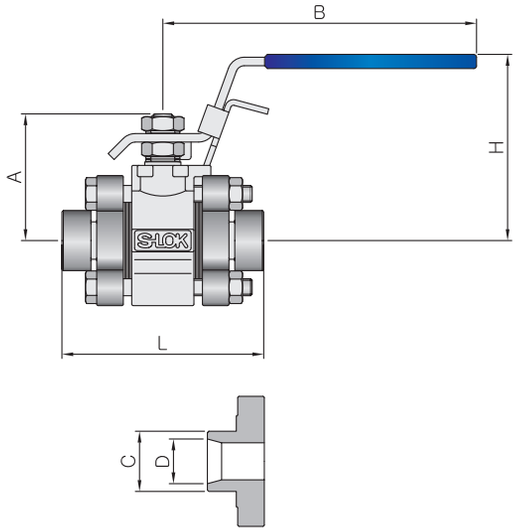

Ordering Number		Size	Pipe Sch.	Cv	Orifice (mm)	Dimensions (mm)					
						A	B	C	D	L	H
SOBV1	BW-4P10	1/4	10	1.2	4.8	30.2	65	13.7	10.4	52.8	45.8
	BW-4P40		40						9.2		
	BW-4P80		80						7.7		
	BW-6P80	3/8	80	3.8	7.1			17.1	10.7		
SOBV2	BW-8P10	1/2	10	15	13.1	44.8	110	21.3	17.1	68.3	64.8
	BW-8P40		40						15.8		
	BW-8P80		80						13.9		
	BW-12P80	3/4	80	13.6				26.7	18.8		
SOBV3	BW-12P10	3/4	10	36	22.2	62.2	150	26.7	22.5	91.2	81.6
	BW-12P40		40		20.9				20.9		
	BW-16P10	1	10	40	22.2			33.4	27.9	87.9	
	BW-16P40		40						26.6		
	BW-16P80		80						23.9		
SOBV4	BW-20P80	1-1/4	80	80	28.6	78	210	42.2	32.5	116	105
	BW-24P10	1-1/2	10	100	31.8			48.3	42.7	114	
	BW-24P40		40						40.9		
	BW-24P80		80						38.1	116	

SOBV2	S	8T	T1	OH	S6
Valve Series	Connection Type	Connection Size	Seat / Seal Material	Option	Body Material
	• **S** : S-LOK Tube fitting • **F** : Female Thread • **SW** : Socket Weld • **BW** : Butt Weld (Pipe Size + SCH)	• **2** : 1/8 ″ • **4** : 1/4 ″ • **6** : 3/8 ″ • **8** : 1/2 ″ • **12** : 3/4 ″ • **16** : 1 ″ • **20** : 1-1/4 ″ • **24** : 1-1/2 ″	• **TE** : PTFE • **T1** : Glass 15% Filled PTFE (Standard) • **T3** : Carbon 15% Filled PTFE • **PK** : PEEK • **VT** : FKM (Standard, Nill) • **EP** : EPDM • **KA** : FFKM	• **OH** : Oval Handle • **PDA** : Double Acting **-NC** : Normal Close **-NO** : Normal Open • **MP** : Mounting Pad • **VP** : Vent Port • **FS** : Fire Safety Design	• **S6** : A351 CF8M • **S6L** : A351 CF3M • **A400** : Monel 400 • **CS** : Carbon Steel

SPV30 Series Plug Valves

Features

- Pressure rating up to 3000psi @ 21˚C (70˚F).
- Temperature rating from -23˚C to 204˚C with PTFE coated FKM seal.
- Small and compact design.
- Easy maintenance and cleaning.
- Size available up to 1/2″ tube and pipe.
- Body material available in 316 stainless steel and brass.

Materials of Construction

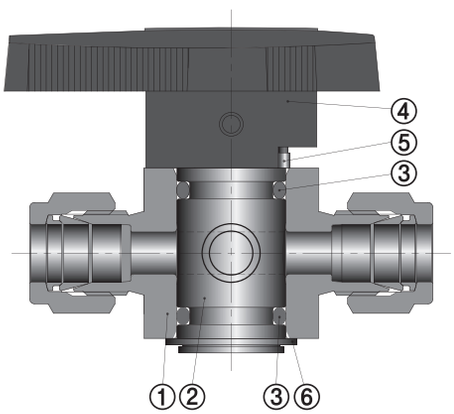

No	Component	Material	
		Stainless Steel	Brass
1	Body	SS316 / A479 or A276	B16 or JIS H3250
2	Plug	PTFE Coated SS316 / A479 or A276	PTFE Coated Brass / B16
3	O-ring	PTFE Coated FKM Standard	
4	Handle	Nylon	
5	Pin	Stainless Steel	
6	Snap Ring	Stainless Steel	

Technical Data

Pressure and Temperature Ratings

Valve Series	Body Material	Pressure Rating @21°C (70°F)	Temperature Range
SPV1	Stainless Steel	3000psig (206 bar)	-23 to 204˚C (-10 to 400˚F)
	Brass		
SPV2	Stainless Steel	3000psig (206 bar)	
	Brass	2000psig (137 bar)	

- Differential pressure is limited to maximum 150psig (10.3bar) when reverse flow occurs.
- Throttling reverse flow may damage O-ring.

Optional O-ring Material Temperature Ratings

Seal Material	Temperature Range
FKM (PTFE Coated)	-28 to 204˚C (-20 to 400˚F)
NBR (PTFE Coated)	-20 to 105˚C (-68 to 221˚F)
EPDM (PTFE Coated)	-45 to 135˚C (-49 to 275˚F)

Operation

- S-LOK plug valves provide positive shut-off, high flow capacity and quick quarter-turn operation.
- S-LOK plug valves provides flow throttling capability.

Downstream Vent

- Optional vented plug and valve body allow pressure release to atmosphere when the valve is closed.
- Maximum operating pressure 150psig (10.3bar).

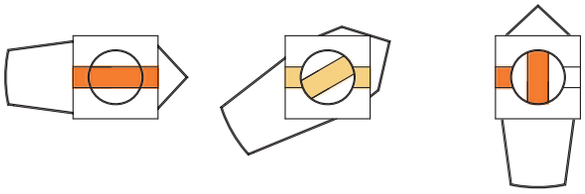

Open Throttling closed

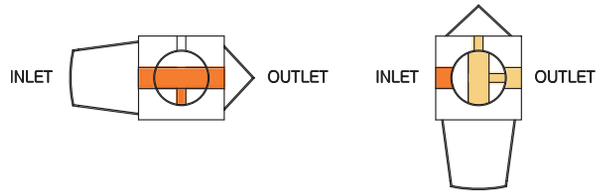

Open Position Close & Vent Position

Dimensions

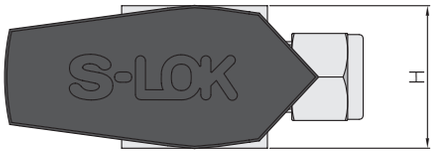

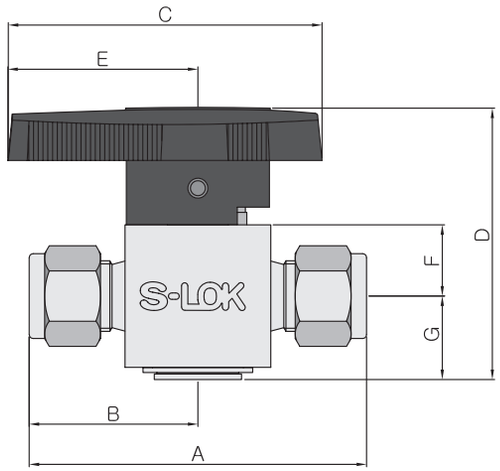

Ordering Number		Orifice	Cv	End Connections		Dimensions (mm)							
				Inlet	Outlet	A	B		C	D	E	F	G	H
SPV1	S-2T	4.4 (0.17)	0.1	1/8″ S-LOK		50.5	25.3		47.8	36.6	29.0	9.4	11.7	19.1
	S-4T		1.6	1/4″ S-LOK		55.1	27.6							
	S-6T		1.1	3/8″ S-LOK		58.2	29.2							
	S-6M		1.6	6mm S-LOK		55.1	27.6							
	M-2N		1.0	1/8″ Male NPT		38.9	19.5							
	M-4N		0.9	1/4″ Male NPT		48.3	24.2							
	MS-4N4T		1.0	1/4″ Male NPT	1/4″ S-LOK	51.8	24.2	27.6						
	MF-4N		1.0	1/4″ Male NPT	1/4″ Female NPT	50.8	24.2	26.6						
	F-2N		1.0	1/8″ Female NPT		45.2	22.6							
	F-4N		0.9	1/4″ Female NPT		53.1	26.6							
	F-4R		0.9	1/4″ Female PT		56.1	28.1							
SPV2	S-6T	7.2 (0.28)	6.4	3/8″ S-LOK		67.6	33.8		63.2	54.1	38.1	14.2	16.8	28.6
	S-8T		4.4	1/2″ S-LOK		73.2	36.6							
	S-8M		6.4	8mm S-LOK		66.6	33.3							
	S-10M		6.4	10mm S-LOK		68.1	34.1							
	S-12M		4.8	12mm S-LOK		73.2	36.6							
	M-8N		2.4	1/2″ Male NPT		67.1	33.5							
	F-6N		4.3	3/8″ Female NPT		60.5	30.3							
	F-8N		2.7	1/2″ Female NPT		73.2	36.6							
	F-8R		2.7	1/2″ Female PT		79.8	39.9							

Flow Rate

Ordering Number		Cv	Pressure Drop to Atmosphere (Δp), psi					
			Air Flow, SCFM@70˚F(21˚C)			Water Flow, US GPM @70˚F(21˚C)		
			1	5	10	1	5	10
SPV1	S-2T	0.1	0.3	0.8	1.1	0.1	0.2	0.3
	S-4T	1.6	6.0	13.0	18.0	1.6	3.6	5.1
	S-6T	1.1	4.1	8.9	12.4	1.1	2.5	3.5
	S-6M	1.6	6.0	13.0	18.0	1.6	3.6	5.1
	M-2N	1.0	3.7	8.1	11.3	1.0	2.2	3.2
	M-4N	0.9	3.7	8.1	11.3	1.0	2.2	3.2
	MS-4N4T	1.0	3.3	7.3	101.0	0.9	2.0	2.8
	MF-4N	1.0	3.7	8.1	11.3	1.0	2.2	3.2
	F-2N	1.0	4.4	9.7	13.5	1.2	2.7	3.8
	F-4N	0.9	3.3	7.3	10.1	0.9	2.0	2.8
	F-4R	0.9	3.3	7.3	10.1	0.9	2.0	2.8
SPV2	S-6T	6.4	23.9	52.0	72.3	6.4	14.3	20.2
	S-8T	4.4	16.4	35.7	49.7	4.4	9.8	13.9
	S-8M	6.4	23.9	52.0	72.3	6.4	14.3	20.2
	S-10M	6.4	23.9	52.0	72.3	6.4	14.3	20.2
	S-12M	4.8	17.9	39.0	54.2	4.8	10.7	15.2
	M-8N	2.4	9.0	19.5	27.1	2.4	5.4	7.6
	F-6N	4.3	16.0	34.9	48.6	4.3	9.6	13.6
	F-8N	2.7	10.1	21.9	30.5	2.7	6.0	8.5
	F-8R	2.7	10.1	21.9	30.5	2.7	6.0	8.5

Testing

- Every valve is tested for shut off at 600psig (41bar).

Ordering Information

SPV1	M	4N	EP	VH	S6
Valve Series	Connection Type	Connection Size	O-ring Material	Vent	Body Material
	• **S** : S-LOK Tube fitting • **M** : Male Thread • **F** : Female Thread	• **2** : 1/8 ″ • **4** : 1/4 ″ • **6** : 3/8 ″ • **8** : 1/2 ″	• **Nil** : FKM (PTFE Coated) • **NB** : NBR (PTFE Coated) • **EP** : EPDM (PTFE Coated)	• **Nil** : Standard • **VH** : Downstream Vent	• **S6** : 316 Stainless Steel • **BS** : Brass

Needle, Toggle & Metering Valves

The best partner for value creation
We support the innovations of customers

02

Catalogue No. S-LOK Mar.2024

SNV50 Series
Integral Bonnet Needle Valves

Features

- Pressure rating up to 5000psig (344bar) at 21˚C (70˚F).
- Temperature rating from -54˚C (-65°F) to 232˚C (450°F) with standard PTFE packing and up to 315˚C (600˚F) with optional PEEK packing.
- Choice of material : Standard SS316 and available in Alloy 400 & Brass.
- Available Sour Gas service per NACE MR0175.
- Applications : General Purpose Gas, Water and Oil
- Variety stem tips include Vee, Regulating and Soft-Seat with PCTFE (KEL-F).
- Forged body with straight and angle patterns.
- Stem threads are hard chrome-plated for maximum service life.
- Packing nut enables easy external adjustments to ensure leak-free stem seal.
- Variety of end connections include reliable S-LOK tube fittings, male/female NPT & ISO threads.

Materials of Construction

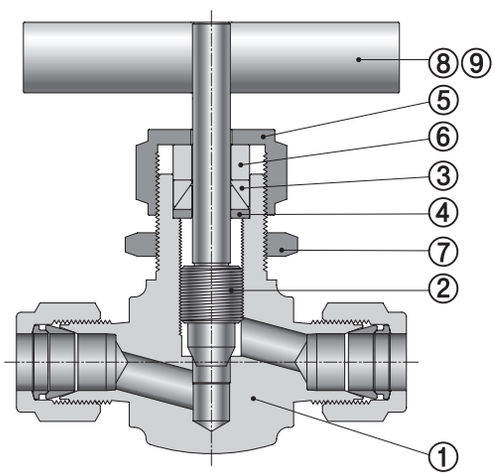

No	Component		Material		
			Stainless Steel	Brass	Alloy 400
1	Body		SS316/ A182	Brass / B124	Alloy 400 / B564
2	Stem	Vee	Chrome Plate SS316 / A479 or A276	SS316 / A479 or A276	Alloy R-405 / B164
		Soft Seat			
		Regulating			
2a	Stem Tip		PCTFE (KEL-F)		
3	Packing		PTFE (Optional PEEK)		
4	Packing Ring		SS316 / A479 or A276	Brass / B16	Alloy R-405 / B164
5	Packing Nut		SS316 / A276		
6	Gland				
7	Panel Nut				
8	Knob Handle		Black Phenolic Knob (Standard)		
	Bar Handle		SS316 / A276		
9	Set Screw		Stainless Steel		

Technical Data

Choice of Stem Tip's Available

Vee Stem	Regulating Stem	Soft Seat Stem
For pressure tightness even at elevated temperatures	**For flow rate control**	**For repetitive shut-off**
		

Pressure-Temperature Rating with Packing and Body Material

Valve Material	Stem	PTFE Packing (Standard)		PEEK Packing (Optional)	
		Temperature Range °C (°F)	Pressure Rating @38°C(100°F)	Temperature Range °C (°F)	Pressure Rating @Max. Temp.
Stainless Steel 316	Vee & Regulating Stem (Metal Seat)	-54°C to 232°C (-65°F to 450°F)	5000psig (344 bar)	-54°C to 315°C (-65°F to 600°F)	3130psig (215 bar)
	Soft Stem (PCTFE Seat)	-54°C to 93°C (-65°F to 200°F)		-54°C to 93°C (-65°F to 200°F)	4295psig (295 bar)
Brass	Vee & Regulating Stem (Metal Seat)	-54°C to 204°C (-65°F to 400°F)	3000psig (206 bar)	-54°C to 204°C (-65°F to 400°F)	390psig (26 bar)
	Soft Stem (PCTFE Seat)	-54°C to 93°C (-65°F to 200°F)		-54°C to 93°C (-65°F to 200°F)	2350psig (161 bar)
Alloy 400	Vee & Regulating Stem (Metal Seat)	-54°C to 232°C (-65°F to 450°F)	3000psig (206 bar)	-54°C to 260°C (-65°F to 500°F)	2375psig (163 bar)
	Soft Stem (PCTFE Seat)	-54°C to 93°C (-65°F to 200°F)		-54°C to 93°C (-65°F to 200°F)	2460psig (181 bar)

Temperature-Working Pressure

- The class rating and rated working pressure are the way that ASME standards simplify the design process.
- The pressure rating is governed by the allowable stress for each different material group, class rating and service temperature.

ASME Material Group	Table 2-2.2	N/A	Table 2-3.4
ASME Class Rating	2080	N/A	1500
Material Name	Stainless Steel 316	Brass	Alloy 400
Temperature, °C (°F)	Working Pressure, psig (bar)		
-54°C (-65°F) to 38°C (100°F)	5000 (344)	3000 (206)	3000 (206)
93°C (200°F)	4295 (295)	2350 (161)	2630 (181)
148°C (300°F)	3875 (266)	2050 (141)	2450 (168)
204°C (400°F)	3560 (245)	390 (26)	2365 (163)
260°C (500°F)	3310 (228)	-	2365 (163)
315°C (600°F)	3130 (215)	-	-

- Pressure ratings of valves with S-LOK end connections are determined by the tubing material and wall thickness.
- Pressure rating of valve is sometimes limited to the working pressure of pipe ends and the tubing connected.

Flow Coefficient (Cv) with Number of Handle Turns

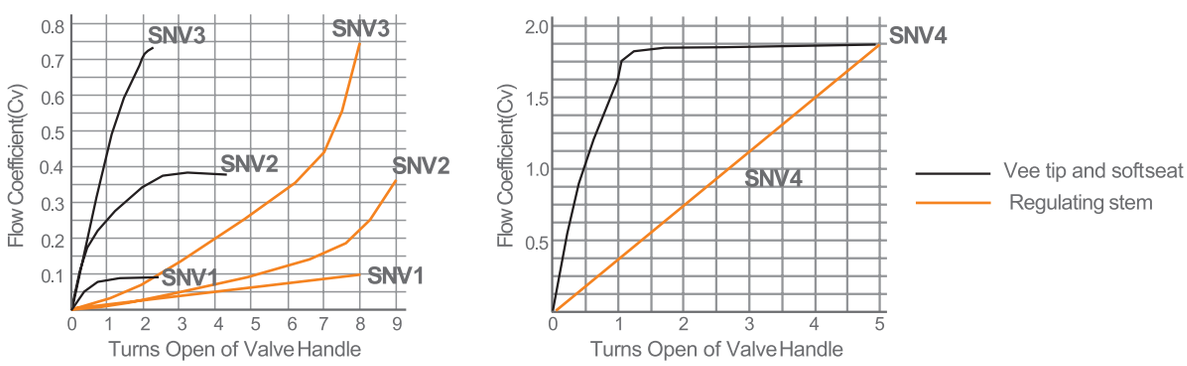

Testing

- Every valve is factory tested with Nitrogen @ 1000psig (69bar)
- Seats have a maximum allowable leak of 0.1 (SSCM).
- Hydrostatic shell tests is performed optional with water at 1.5 times the working pressure.

Ordering Information & Dimensions

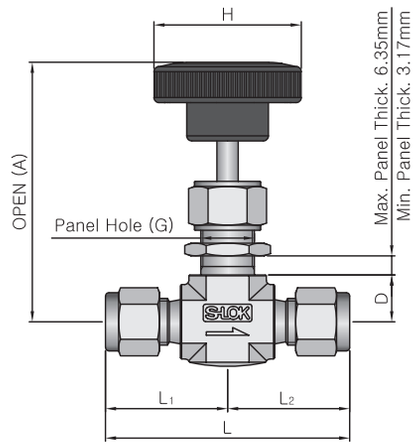

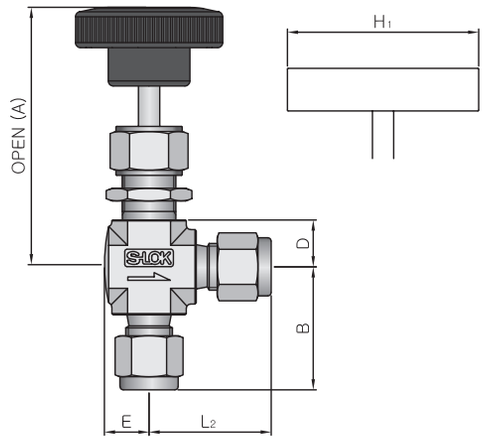

Ordering Number		Orifice (mm)	Cv	End Connections		Dimensions (mm)									
				Inlet	Outlet	A	B	L	L_1	L_2	E	D	H	H_1	G
SNV1	F-2N	2.0	0.09	1/8″ Female NPT		61.0	21.0	42.0	21.0		9.5	11.0	35.0	32.0	13.5
	M-2N			1/8″ Male NPT											
	MS-2N2T			1/8″ Male NPT	1/8″ S-LOK			47.0	21.0	26.0					
	S-2T			1/8″ S-LOK			26.0	52.0	26.0						
	S-3M			3mm S-LOK											
SNV2	F-2N	4.4	0.37	1/8″ Female NPT		61.0	21.0	42.0	21.0		9.5	11.0	35.0	45.0	13.5
	M-2N			1/8″ Male NPT											
	M-4N			1/4″ Male NPT			25.0	50.0	25.0						
	MS-4N4T			1/4″ Male NPT	1/4″ S-LOK			54.0	25.0	28.8					
	S-6M			6mm S-LOK			29.0	57.6	28.8						
	S-4T			1/4″ S-LOK											
	S-8M			8mm S-LOK			30.0	59.2	29.6						
SNV3	F-4N	6.4	0.73	1/4″ Female NPT		77.0	28.0	56.0	28.0		13.0	13.5	47.0	64.0	19.8
	F-4R			1/4″ Female ISO Thread											
	MF-4N			1/4″ Male NPT	1/4″ Female NPT										
	MS-4N6T			1/4″ S-LOK	3/8″ S-LOK			61.2	28.0	33.2					
	M-6N			3/8″ Male NPT			29.0	58.0	29.0						
	MS-6N6T			3/8″ Male NPT	3/8″ S-LOK			62.2	29.0	33.2					
	MS-6N8T			3/8″ Male NPT	1/2″ S-LOK			65.0	29.0	36.0					
	S-10M			10mm S-LOK			33.0	66.4	33.2						
	S-6T			3/8″ S-LOK											
	S-12M			12mm S-LOK			36.0	72.0	36.0						
	S-8T			1/2″ S-LOK											
SNV4	F-6N	9.5	1.80	3/8″ Female NPT		92.0	38.0	76.0	38.0		19.0	19.0	63.0	76.0	26.0
	F-6R			3/8″ Female PT											
	F-8N			1/2″ Female NPT											
	F-8R			1/2″ Female ISO Thread											
	M-8N			1/2″ Male NPT											
	MF-8N			1/2″ Male NPT	1/2″ Female NPT										
	S-8T			1/2″ S-LOK			49.0	97.0	48.5						
	S-12T			3/4″ S-LOK											

* Dimensions are for reference only and are subject to change.

SNV3	S	8T	A	R	BH	S6
Valve Series	Connection Type	Connection Size	Flow Pattern	Stem Type	Option	Body Material

- **Nil :** Straight
- **A :** Angle Pattern

- **Nil :** Vee Stem
- **R :** Regulating Stem
- **K :** Soft Seat Stem

- **Nil :** Standard
- **BH :** Bar Handle
- **PK :** PEEK Packing
- **SG :** Sour Gas Service

- **S6 :** 316 Stainless Steel
- **BS :** Brass
- **A400 :** Alloy 400

SBNV60 Series
Integral Bonnet Bar Stock Needle Valves

Features

- Pressure rating up to 6000psig (413bar) at 21°C (70°F).
- Temperature rating from -54°C (-65°F) to 232°C (450°F) with standard PTFE packing and up to 315°C (600°F) with optional PEEK packing.
- Choice of material : Standard SS316 and available in Alloy 400 & Brass.
- Available Sour Gas service per NACE MR0175
- Applications : General Purpose Gas, Water and Oil
- Variety stem tips include Vee, Regulating and Soft-Seat with PCTFE (KEL-F).
- Bar stock body with straight and angle patterns.
- Stem threads are hard chrome-plated for maximum service life.
- Packing nut enables easy external adjustments to ensure leak-free stem seal.
- Variety of end connections include reliable S-LOK tube fittings, male/female NPT & ISO threads.

Materials of Construction

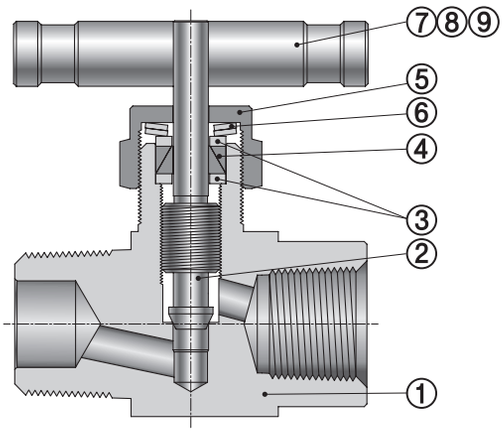

No	Component		Material	
			Stainless Steel	Alloy 400
1	Body		SS316 / A479 or A276	Alloy 400 / B564
2	Stem	Vee	Chrome Plate SS316 / A479 or A276	Alloy R-405 / B164
		Soft Seat		
2a	Stem Tip		PCTFE (KEL-F)	
3	Packing Ring		SS316 / A479 or A276	Alloy R-405 / B164
4	Packing		PTFE(Optional PEEK)	
5	Packing Nut		SS316 / A276	
6	Packing Spring		17-7PH	
7	Bar Handle		SS316 / A276 (Standard)	
8	Set Screw		Stainless Steel	
9	Handle Pin		Stainless Steel	

Technical Data

Pressure-Temperature Rating with Packing and Body Material

Valve Material	Stem	PTFE Packing (Standard)		PEEK Packing (Optional)	
		Temperature Range °C (°F)	Pressure Rating @38°C(100°F)	Temperature Range °C (°F)	Pressure Rating @Max. Temp.
Stainless Steel 316	Vee Stem (Metal Seat)	-54°C to 232°C (-65°F to 450°F)	6000psig (413 bar)	-54°C to 315°C (-65°F to 600°F)	3760psig (259 bar)
	Soft Stem (PCTFE Seat)	-54°C to 93°C (-65°F to 200°F)		-54°C to 93°C (-65°F to 200°F)	5160psig (355bar)
Alloy 400	Vee Stem (Metal Seat)	-54°C to 232°C (-65°F to 450°F)	5000psig (344 bar)	-54°C to 260°C (-65°F to 500°F)	3940psig (271 bar)
	Soft Stem (PCTFE Seat)	-54°C to 93°C (-65°F to 200°F)		-54°C to 93°C (-65°F to 200°F)	4380psig (301bar)

* Not applicable over 260°C(500°F) PEEK is not recommended for service with aromatic heat transfer fluids or concentrated sulfuric and nitric acids. Other limitations may apply.

Temperature-Working Pressure

ASME Material Group	Table 2-2.2	Table 2-3.4
ASME Class Rating	2500	
Material Name	Stainless Steel 316	Alloy 400
Temperature, ˚C (˚F)	Working Pressure, psig (bar)	
-54°C (-65°F) to 38˚C (100˚F)	6000 (413)	5000 (344)
93˚C (200˚F)	5160 (355)	4380 (301)
148˚C (300˚F)	4660 (321)	4080 (281)
204˚C (400˚F)	4280 (295)	3940 (271)
260˚C (500˚F)	3980 (274)	3940 (271)
315˚C (600˚F)	3760 (259)	3940 (271)

- Pressure ratings of valves with S-LOK end connections are determined by the tubing material and wall thickness.
- For more information about pressure ratings of valves with tube fitting end connections.
- Pressure rating of valve is sometimes limited to the working pressure of pipe ends and the tubing connected.

Flow Coefficient (Cv) with Number of Handle Turns

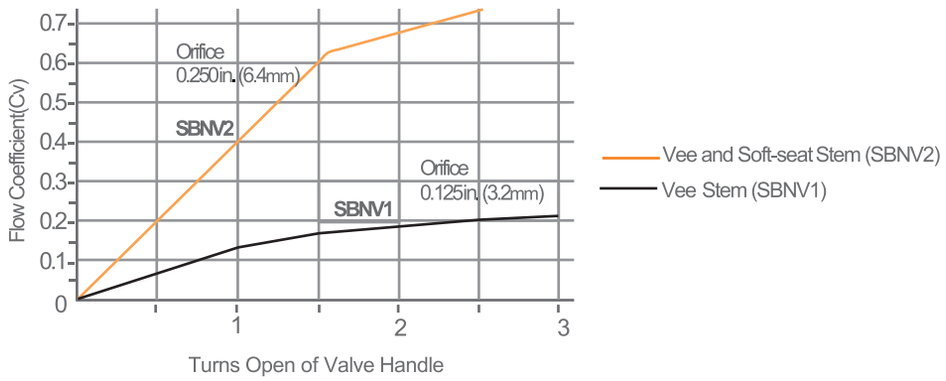

Choice of Stem Tip's & Handle Available

- Stainless steel bar handle is standard all valves.
- Black phenolic knob is standard for soft seat stem valves

Vee Stem	Regulating Stem	Soft Seat Stem
For pressure tightness even at elevated temperatures	**For flow rate control**	**For repetitive shut-off**
		

Testing

- Every valve is factory tested with Nitrogen @ 1000psig (69bar)
- Seats have a maximum allowable leak of 0.1 (SSCM).
- Hydrostatic shell tests is performed optional with water at 1.5 times the working pressure.

Ordering Information & Dimensions

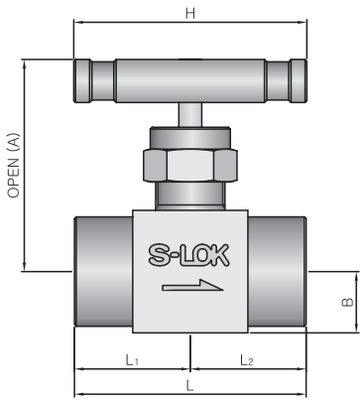

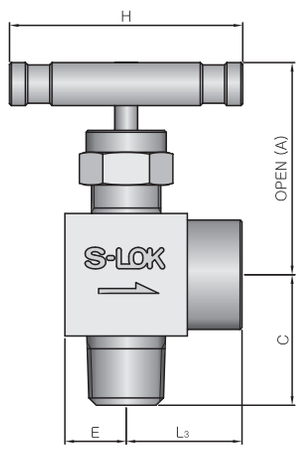

Ordering Number		Orifice (mm)	Cv	End Connections		Dimensions (mm)								
				Inlet	Outlet	A	B	C	L	L_1	L_2	L_3	E	H
SBNV1	F-4N	3.2	0.21	1/4″ Female NPT		42.2	11.2	25.4	47.8	23.9		25.4	11.2	44.5
	F-4R			1/4″ Female ISO Thread										
	M-4N			1/4″ Male NPT				-	49.2	24.6		-		
	MF-4N			1/4″ Male NPT	1/4″ Female NPT			26.2	48.5	24.6	23.9	26.2		
	MS-4N4T			1/4″ Male NPT	1/4″ S-LOK				55.8	24.6	31.2			
	S-4T			1/4″ S-LOK				29.5	62.5	31.2		29.5		
SBNV2	F-6N	6.4	0.73	3/8″ Female NPT		58.7	16.8	31.8	63.5	31.8		31.8	16.8	64.0
	F-8N			1/2″ Female NPT				35.8						
	F-8R			1/2″ Female ISO Thread										
	MF-6N			3/8″ Male NPT	3/8″ Female NPT			31.0						
	MF-8N			1/2″ Male NPT	1/2″ Female NPT			35.8	64.8	33.0	31.8	31.8		
	MF-12N8N			3/4″ Male NPT	1/2″ Female NPT			-	63.5	31.8		-		
	S-6T			3/8″ S-LOK				-	78.2	39.1		-		
	S-8T			1/2″ S-LOK				-	83.8	41.9		-		

* Dimensions are for reference only and are subject to change.

SBNV2	S	8T	A	R	SG	S6
Valve Series	Connection Type	Connection Size	Flow Pattern	Stem Type	Option	Body Material

- **Nil :** Straight
- **A :** Angle Pattern

- **Nil :** Vee Stem
- **R :** Regulating Stem
- **K :** Soft Seat Stem

- **Nil :** Standard
- **PK :** PEEK Packing
- **SG :** Sour Gas Service

- **S6 :** 316 Stainless Steel
- **A400 :** Alloy 400

SHNV100 Series
High Pressure Needle Valves

Features

- Pressure rating up to 10000psig (689bar) at 21˚C (70˚F).
- Temperature rating from -54˚C (-65˚F) to 232˚C (450˚F) with standard PTFE packing and up to 648˚C (1200˚F) with optional Graphite packing.
- Chevron PTFE packing design provides highly qualified sealing maintain ability.
- Packing Bolt allows external packing adjustment.
- Packing under the stem threads is to isolate threads from system fluid and lubricant washout.
- Non-rotating stem tip at closure is used for long-life and leak-tight shutoff.
- Lock plate ensures the valve to be fastened to the body.
- Available Sour Gas service per NACE MR0175.

Materials of Construction

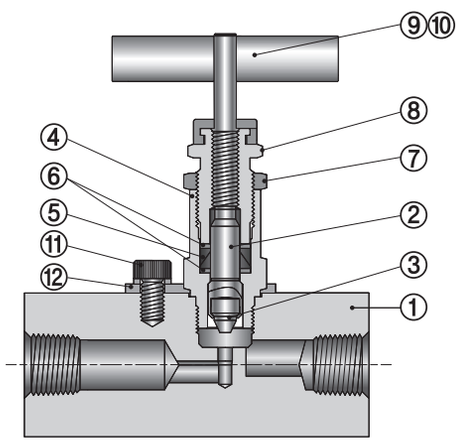

No	Component	Material	
		Stainless Steel	Carbon Steel
1	Body	SS316 / A479 or A276	JIS G4051
2	Stem	SS316 / A479 or A276	
3	Stem Tip	SS630 / A564 (17-4PH)	
4	Bonnet	SS316 / A479 or A276	JIS G4051
5	Packing	Chevron PTFE (Optional PEEK)	
6	Packing Ring	Reinforced PTFE	
7	Lock Nut	SS316 / A276	
8	Packing Bolt	SS316 / A479 or A276	JIS G4051
9	Set Screw	Stainless Steel	
10	Bar Handle	Stainless Steel	
11	Lock Bolt	Stainless Steel	
12	Lock Plate	Stainless Steel	

* Carbon Steel finished White zinc galvanized.

Technical Data

Pressure-Temperature Rating with Packing and Body Material

Valve Material	Packing Material	Temperature Range ˚C (˚F)	Pressure Rating @38˚C(100˚F)	Pressure Rating @Max. Temp.
Stainless Steel 316	PTFE	-54˚C to 232˚C (-65˚F to 450˚F)	10000psig (689 bar)	4130psig (285 bar)
	Graphite	-54˚C to 648˚C (-65˚F to 1200˚F)		1715psig (118bar)
Carbon Steel	PTFE	-29˚C to 176˚C (-20˚F to 350˚F)	10000psig (689 bar)	5230psig (360 bar)
	Graphite	-29˚C to 176˚C (-20˚F to 350˚F)		

Packing Adjustment and Actuation Torque

- Extreme or rapid temperature cycle while valve in service may require packing adjustment.
- Valves that have not been actuated for a period of time may have a higher initial actuation torque.

Testing

- Every valve is factory tested with Nitrogen @ 1000psig (69bar)
- Seats have a maximum allowable leak of 0.1 (SSCM).
- Stem packing is tested for the detection of no leakage.

Ordering Information & Dimensions

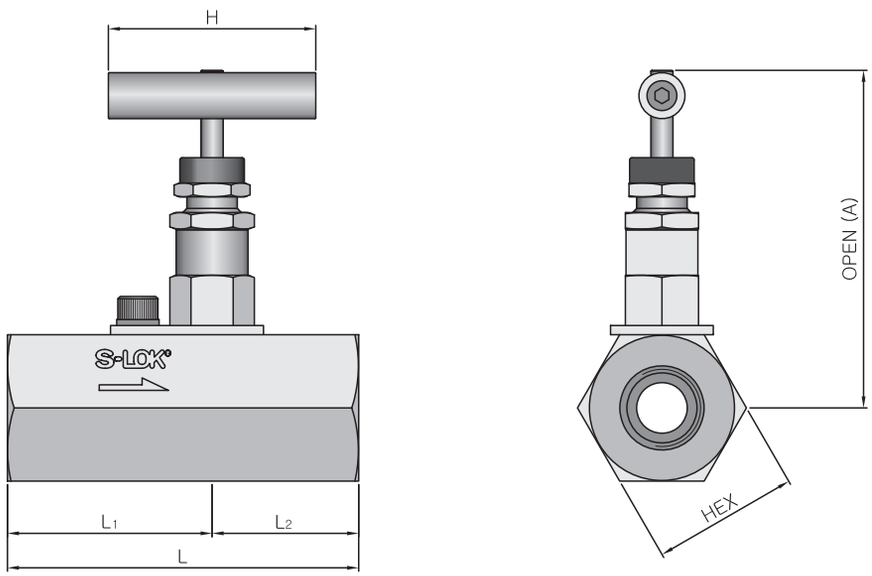

Ordering Number		Orifice (mm)	End Connections		Dimensions (mm)					
			Inlet	Outlet	A	L	L_1	L_2	HEX	H
SHNV1	F-4N	3.2	1/4″ Female NPT		72.7	76.2	44.4	31.8	31.8	45.0
	F-6N		3/8″ Female NPT							
SHNV2	F-8N	5.0	1/2″ Female NPT		94.8	76.2	38.1	38.1	38.1	64.0
	MF-8N		1/2″ Male NPT	1/2″ Female NPT		95.2	57.1			
	MF-12N		3/4″ Male NPT	3/4″ Female NPT	98.2				44.5	

* Dimensions are for reference only and are subject to change.

SHNV2	F	8N	GF	SG	S6
Valve Series	Connection Type	Connection Size	Packing Material	Option	Body Material

- **Nil :** PTFE (Standard)
- **GF :** Graphite Packing

- **Nil :** Standard
- **SG :** Sour Gas Service

- **S6 :** 316 Stainless Steel
- **CS :** Carbon Steel

SUNV60 Series
Union Bonnet Needle Valves

Features

- Pressure rating up to 6000psig (413bar) at 21˚C (70˚F).
- Temperature rating from -54˚C (-65˚F) to 232˚C (450˚F) with standard PTFE packing and up to 648˚C (1200˚ F) with optional Graphite packing.
- Standard 316 Stainless Steel, optional Alloy 20 and Alloy C276 construction.
- Valve stem back seating against the bevelled edge of bonnet in fully open position prevents maximum leakage through bonnet when packing fails.
- Standard non-rotating stem tip and stem packing below the threads design.
- Available Sour Gas service per NACE MR0175.
- **Handle** standard 316 Stainless Steel bar handle.
- **External Packing Bolt** allow packing adjustment without disassembling the valve.
- **Roll threaded and hard chrome plated stem** is for extended valve's lifespan.
- **Panel Mounting Nut** is standard and permits the access of the valve panel or actuator.
- **Union Nut** prevents accidental disassembly of the valve in its service.
- **Stem packing below the threads** prevents media contamination and thread lubricant washout.
- **Non rotating stem tip at closure** is to maximize the lifespan of the metal seat and complete sealing.

Material of Construction

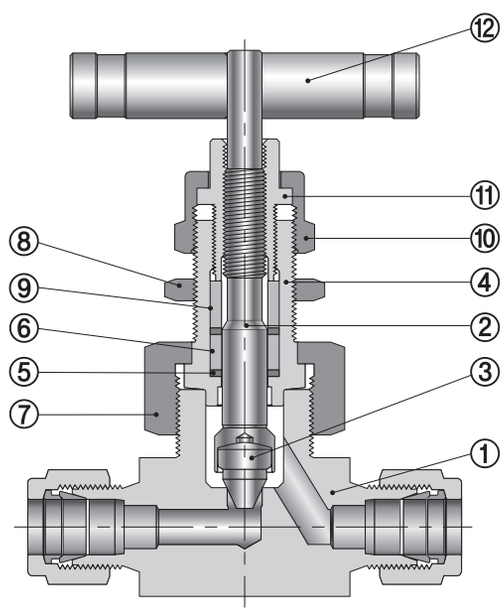

No	Component	Material	
		Stainless Steel	Alloy C-276
1	Body	SS316 / A479 or A276	Alloy C-276
2	Stem	SS316 / A479 or A276	Alloy C-276
3	*Stem Tip	SS630 / A564 (17-4PH)	Alloy C-276
4	Bonnet	SS316 / A479 or A276	Alloy C-276
5	Packing Ring		
6	Packing	PTFE (Optional PEEK, Graphite)	
7	Union Nut	SS316 / A276	
8	Panel Nut	SS316 / A276	
9	Gland	SS316 / A276	Alloy C-276
10	Cap Nut	SS316 / A276	
11	Packing Bolt	SS316 / A276	
12	Set Screw	Stainless Steel	
	Bar Handle	SS316 / A276 (Optional anodized Aluminum)	

* Standard Vee tip, optional Ball and Regulating tip.

Technical Data

Pressure-Temperature Rating with Packing and Body Material

Valve Material	Packing Material	Temperature Range ˚C (˚F)	Pressure Rating @38˚C(100˚F)	Pressure Rating @Max. Temp.
Stainless Steel 316	PTFE	-54˚C to 232˚C (-65˚F to 450˚F)	6000psig (413 bar)	4130psig (284 bar)
	PEEK	-54˚C to 315˚C (-65˚F to 600˚F)		3760psig (259 bar)
	Graphite	-54˚C to 648˚C (-65˚F to 1200˚F)		1715psig (118 bar)
Alloy C-276	PTFE	-54˚C to 232˚C (-65˚F to 450˚F)	6000psig (413 bar)	5710psig (393 bar)
	PEEK	-54˚C to 260˚C (-65˚F to 500˚F)		5540psig (381 bar)
	Graphite	-54˚C to 648˚C (-65˚F to 1200˚F)		1545psig (106 bar)

* Not applicable over 260˚C(500˚F) PEEK is not recommended for service with aromatic heat transfer fluids or concentrated sulfuric and nitric acids. Other limitations may apply.

Temperature-Working Pressure

ASME Material Group	Table 2-2.2	N/A
ASME Class Rating	2500	N/A
Material Name	Stainless Steel 316	Alloy C-276
Temperature, ˚C (˚F)	Working Pressure, psig (bar)	
-54˚C (-65˚F) to 38˚C (100˚F)	6000 (413)	6000 (413)
93˚C (200˚F)	5160 (355)	6000 (413)
148˚C (300˚F)	4660 (321)	6000 (413)
204˚C (400˚F)	4280 (295)	5820 (401)
232˚C (450˚F)	4130 (284)	5710 (393)
260˚C (500˚F)	3980 (274)	5540 (381)
315˚C (600˚F)	3760 (259)	5040 (347)
426˚C (800˚F)	3460 (238)	4230 (291)
537˚C (1000˚F)	3030 (208)	3030 (208)
648˚C (1200˚F)	1715 (118)	1545 (106)

- Pressure ratings of valves with S-LOK end connections are determined by the tubing material and wall thickness.
- Pressure rating of valve is sometimes limited to the working pressure of pipe ends and the tubing connected.

Flow Data @ 100 F (38˚C) for Valves with Regulating Stem tip

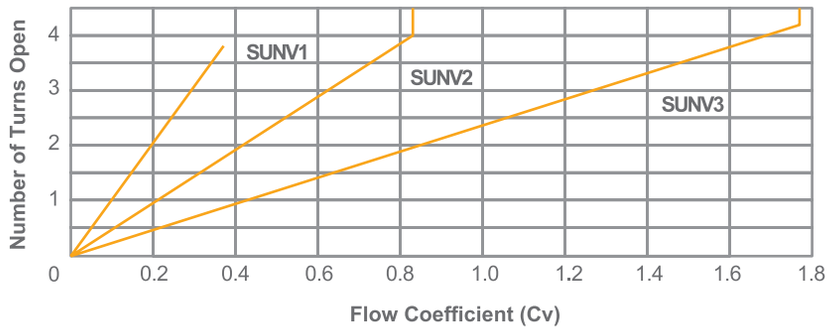

- Valve with standard Vee & Ball tip is designed to be used in a fully open or fully closed position.

Handle

- Stainless steel bar handle is standard all valves. Optionally, anodized black aluminum bar handle is available.
- To order handle for field assembly select desired handle ordering number from the table.

Testing

- Every valve is factory tested with Nitrogen @ 1000psig (69bar)
- Seats have a maximum allowable leak of 0.1 (SSCM).

Ordering Information & Dimensions

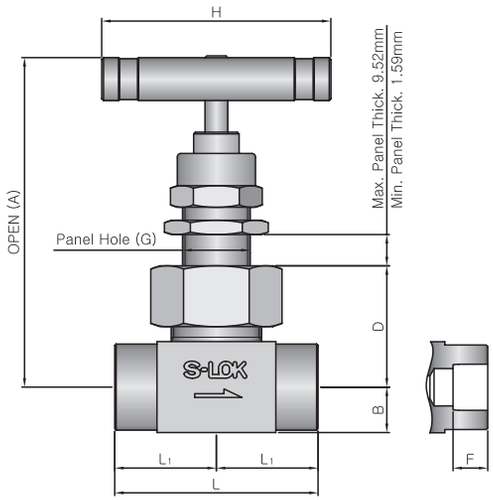

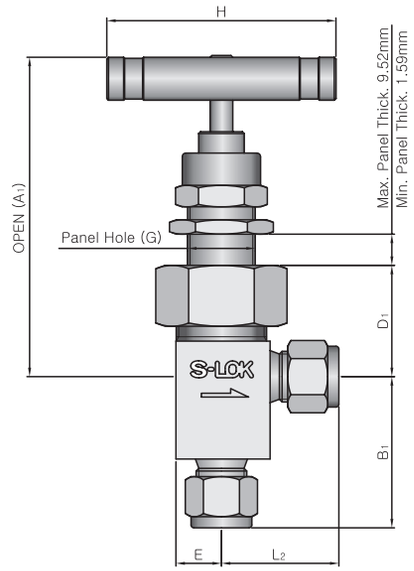

Ordering Number		Orifice (mm)	Cv	End Connections Inlet	End Connections Outlet	Dimensions (mm) A	A_1	B	B_1	D	D_1	E	L	L_1	L_2	H	G	F
SUNV1	F-2N	4.0	0.35	1/8″ Female NPT		77.3	82.0	9.7	25.4	27.7	32.5	9.7	50.8	25.4	22.6	45.0	15.1	-
	F-4N			1/4″ Female NPT				9.9					52.4	26.2				
	M-4N			1/4″ Male NPT			77.5	9.7			27.7		50.8	25.4	25.4			
	MF-4N			1/4″ Male NPT	1/4″ Female NPT		82.0	9.9			32.5		52.4	26.2	22.6			
	S-6M			6mm S-LOK			77.5	9.7	37.6		27.7		61.0	30.5	29.5			
	S-4T			1/4″ S-LOK														
	S-8M			8mm S-LOK			-		-		-				-			
	SW-4T			1/4″ Tube Socket Weld			77.5		30.2		27.7		46.2	23.1	22.4			7.1
SUNV2	F-4N	6.4	0.86	1/4″ Female NPT		92.5	97.0	12.7	28.4	34.0	37.3	12.7	57.2	28.6	25.4	64.0	19.8	-
	F-6N			3/8″ Female NPT														
	S-6T			3/8″ S-LOK			90.7		42.2		31.0		71.9	35.8	32.8			
	S-10M			10mm S-LOK			94.0		39.4		34.3		72.4	36.1	33.0			
	S-12M			12mm S-LOK					41.9		34.0		77.2	38.6	35.6			
	S-8T			1/2″ S-LOK														
	SW-4P			1/4″ Pipe Socket Weld			97.0		28.4		37.3		57.2	28.6	25.4			9.7
	SW-6T			3/8″ Tube Socket Weld			94.0		31.8		34.0							7.9
	SW-8T			1/2″ Tube Socket Weld			95.5		25.4		35.6							9.7
SUNV3	F-8N	11.1	2.4	1/2″ Female NPT		121.0	126.0	15.7	39.6	46.2	50.8	17.5	79.2	39.6	33.3	88.9	26.2	-
	F-12N			3/4″ Female NPT		124.0	-	19.8	-	49.5	-	-	82.2	41.1	-			
	F-16N			1″ Female NPT		129.0		25.4		54.1			92.0	46.0				
	MF-8N		1.9	1/2″ Male NPT	1/2″ Female NPT	121.0	126.0	15.7	39.6	46.2	50.8	17.5	79.2	39.6	33.3			
	MF-12N			3/4″ Male NPT	3/4″ Female NPT	124.0	-	19.8	-	49.5	-	-	82.2	41.1	-			
	MF-16N			1″ Male NPT	1″ Female NPT	129.0		25.4		54.1			92.0	46.0				
	S-12M			12mm S-LOK		121.0	123.0	15.7	52.8	46.2	47.8	17.5	99.6	49.8	42.7			
	S-8T		2.1	1/2″ S-LOK														
	S-12T		2.4	3/4″ S-LOK														
	S-16T			1″ S-LOK			-	17.5	-	47.8	-		104.0	52.0	-			
	SW-8P			1/2″ Pipe Socket Weld		123.0	126.0		39.6		50.8		79.2	39.6	33.3			9.7
	SW-8T		2.2	1/2″ Tube Socket Weld		121.0	123.0	15.7	42.9	46.2	47.8							9.7
	SW-12T			3/4″ Tube Socket Weld			-		-	46.2	-				-			11.2

* Dimensions are for reference only and are subject to change.

SUNV2	F	6N	A	PK	B	SG	S6
Valve Series	Connection Type	Connection Size	Flow Pattern	Packing Material	Stem Type	Option	Body Material
			· **Nil** : Straight · **A** : Angle Pattern	· **Nil** : PTFE · **PK** : PEEK · **GF** : Graphite	· **Nil** : Vee · **R** : Regulating · **B** : Ball	· **Nil** : Standard · **SG** : Sour Gas Service	· **S6** : 316 Stainless Steel · **C276** : Alloy C-276

SQNV Series
Square Bar Stock Needle Valves

Features

- Pressure rating up to 6000psig (413bar) at 21˚C (70˚F).
- Temperature rating from -28˚C (-20°F) to 204˚C (400˚F) with standard FKM O-ring.
- Compact design & low operating torque.
- Available panel mounting.
- Non-rotating stem tip provide positive seal and prevents galling.
- Sealed below the stem threads to prevents lubricant washout.
- Safety back seating seals in fully open position.
- Bonnet lock pin prevents accidental valve disassembly.

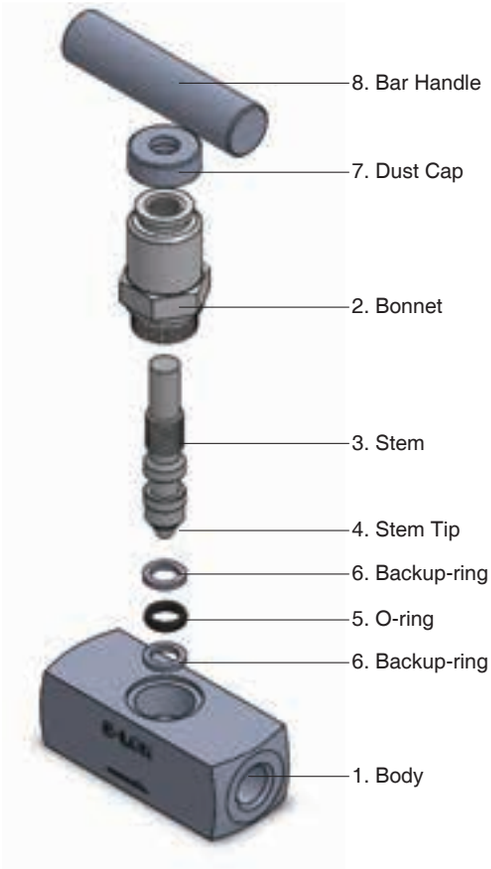

Material of Construction

No	Component	Material	
		Stainless Steel	Alloy 400
1	Body	SS316 / A479 or A276	Alloy 400 / B164
2	Bonnet		
3	Stem		
4	Stem Tip	SS630 / A564	Alloy R-405 / B164
5	O-ring	FKM	
6	Backup-ring	PTFE	
7	Dust Cap	NBR	
8	Bar Handle	SS316 / A276	
9	Set Screw	Stainless Steel	

Pressure - Temperature Ratings

ASME Material Group	Table 2-2.2	Table 2-3.4
ASME Class Rating	2500	
Material Name	Stainless Steel 316	Alloy 400
Temperature, °C (°F)	Working Pressure, psig (bar)	
-28°C (-20°F) to 38˚C (100˚F)	6000 (413)	5000 (344)
93˚C (200˚F)	5160 (355)	4380 (301)
148˚C (300˚F)	4660 (321)	4080 (281)
204˚C (400˚F)	4280 (295)	3940 (271)

- Pressure ratings of valves with S-LOK end connections are determined by the tubing material and wall thickness.

O-ring Material	Temperature, ˚C (˚F)
FKM	-28˚C ~ 204˚C (-20˚F ~ 400˚F)
NBR	-20˚C ~ 105˚C (-4˚F ~ 221˚F)
EPDM	-28˚C ~ 148˚C (-20˚F ~ 300˚F)

Flow Coefficient (Cv) with Number of Handle Turns

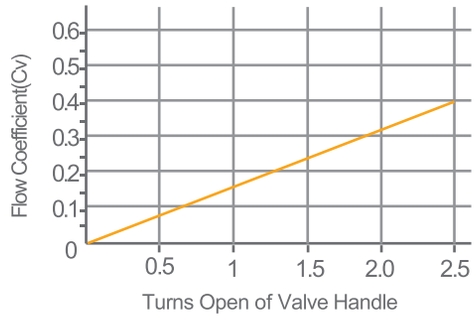

Testing

- Every valve is factory tested with Nitrogen @ 1000psig (69bar)
- Seats have a maximum allowable leak of 0.1 (SSCM).
- Hydrostatic shell test is performed optional with water at 1.5 times the working pressure.

Sour Gas Service

- Sour gas service provided to accordance with NACE MR0175.

Ordering Information & Dimensions

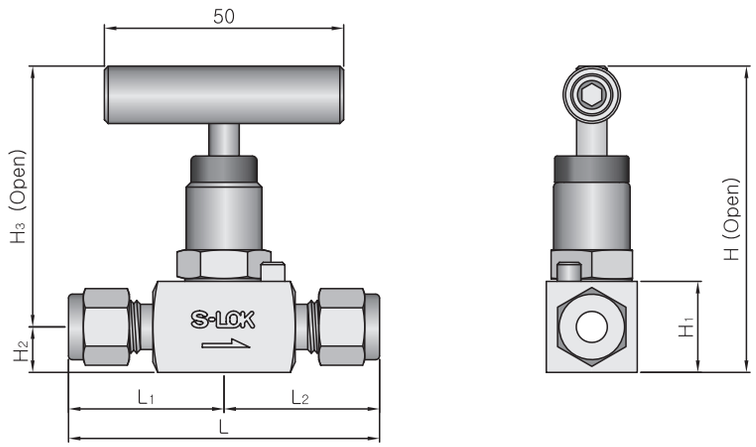

Ordering Number		Orifice (mm)	End Connections		Dimensions (mm)						
			Inlet	Outlet	L	L_1	L_2	H	H_1	H_2	H_3
SQNV	F-2N	4.8	1/8″ Female NPT		57.0	28.5		64.0	19.0	9.5	9.5
	F-4N		1/4″ Female NPT								
	MF-2N		1/8″ Male NPT	1/8″ Female NPT							
	MF-4N		1/4″ Male NPT	1/4″ Female NPT							
	S-2T	2.0	1/8″ S-LOK		63.6	31.8					
	S-6M	4.8	6mm S-LOK		65.0	32.5					
	S-4T		1/4″ S-LOK								
	S-6T		3/8″ S-LOK		68.0	34.0		70.5	25.4	12.7	12.7
	S-12M		12mm S-LOK		73.2	36.6					
	S-8T		1/2″ S-LOK								
	F-6N		3/8″ Female NPT		62.0	31.0					
	MF-6N		3/8″ Male NPT	3/8″ Female NPT	65.0	34.0	31.0				
	F-8N		1/2″ Female NPT		70.0	35.0		73.5	28.5	14.3	14.3
	MF-8N		1/2″ Male NPT	1/2″ Female NPT	74.0	39.0	35.0				

* Dimensions are for reference only and are subject to change.

SQNV	F	8N	EP	SG	S6
Valve Series	Connection Type	Connection Size	O-ring Material	Option	Body Material

- **VT :** FKM
- **NBR :** NBR
- **EP :** EPDM

- **Nil :** Standard
- **SG :** Sour Gas Service
- **PN :** Panel Mounting

- **S6 :** 316 Stainless Steel
- **A400 :** Alloy 400

SDNV30 Series
Non-rotating Stem Needle Valves

Features

- Pressure rating up to 3000psig (206bar) at 21˚C (70˚F).
- Temperature rating from -28˚C (-20˚F) to 93˚C (204˚F) with standard FKM O-ring and PCTFE stem tip.
- One-piece forge body is available in straight and angle flow patterns.
- Non-rotating stem tip provide positive seal and repetitive shutoff.
- Safety back seating seals in fully open position.
- Thread of handle isolated from system fluid.
- Handle to prevent external contaminants from entering the valve.
- Available Sour Gas service per NACE MR0175.

Materials of Construction

No	Component	Material		
		Stainless Steel	Brass	Alloy 400
1	Body	SS316 / A182	Brass / B124	Alloy 400 / B564
2	Stem Tip	PCTFE (Optional PEEK)		
3	Stem	SS316 / A479 or A276		Alloy R-405 / B164
4	Washer	SS316 / A276	Aluminum	
5	O-ring	FKM (Optional NBR, EPDM)		
6	Backup-ring	PTFE		
7	Packing Bolt	SS316 / A276	Brass / B16	Alloy R-405 / B164
8	Spool	Aluminum		
9	Retaining Ring	Stainless Steel		
10	Handle	Aluminum (Black anodized)		

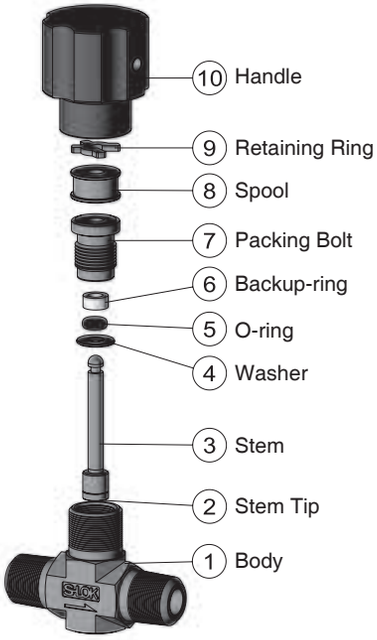

Temperature-Working Pressure

ASME Material Group	Table 2-2.2	N/A	Table 2-3.4
ASME Class Rating	1500	N/A	1500
Material Name	Stainless Steel 316	Brass	Alloy 400
Temperature, ˚C (°F)	Working Pressure, psig (bar)		
-28˚C (-20˚F) to 38˚C (100˚F)	3000 (206)	3000 (206)	3000 (206)
93˚C (200˚F)	2580 (177)	2350 (161)	2630 (181)
148˚C (300˚F)	2330 (160)	2050 (141)	2450 (168)
204˚C (400˚F)	2140 (147)	390 (26)	2365 (163)

- Pressure ratings of valves with S-LOK end connections are determined by the tubing material and wall thickness.

O-ring Material	Temperature, ˚C (˚F)
FKM	-28˚C ~ 204˚C (-20˚F ~ 400˚F)
NBR	-20˚C ~ 105˚C (-4˚F ~ 221˚F)
EPDM	-28˚C ~ 148˚C (-20˚F ~ 300˚F)

Stem Tip Material	Temperature, ˚C (˚F)
PCTFE	-28˚C ~ 93˚C (-20˚F ~ 200˚F)
PEEK	-28˚C~ 232˚C (-20˚F ~ 450˚F)

Flow Coefficient (Cv) with Number of Handle Turns

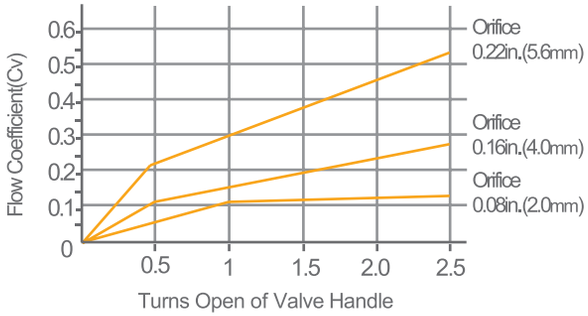

Testing

- Every valve is factory tested with Nitrogen @ 1000psig (69bar)
- Seats have a maximum allowable leak of 0.1 (SSCM).

Sour Gas Service

- Sour gas service provided to accordance with NACE MR0175.

Ordering Information & Dimensions

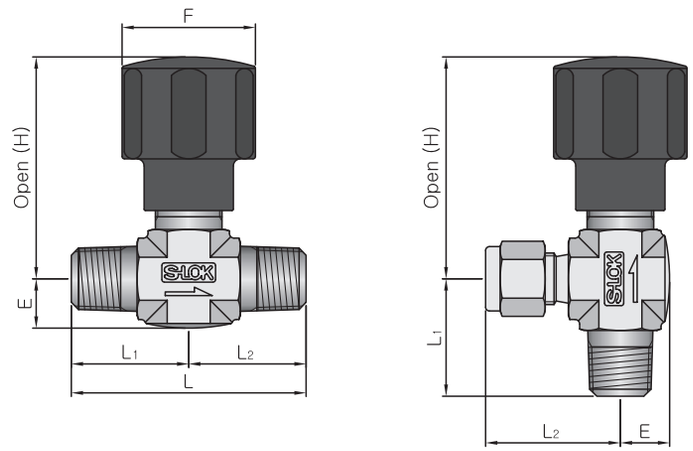

Ordering Number		Orifice (mm)	Cv	End Connections		Dimensions (mm)					
				Inlet	Outlet	L	L_1	L_2	E	F	H
SDNV1	MF-2N	2.4	0.12	1/8″ Male NPT	1/8″ Female NPT	45.4	21.4	24.0	9.7	28.4	47.2
	MS-2N4T			1/8″ Male NPT	1/4″ S-LOK	50.1	21.4	28.7			
	S-2T			1/8″ S-LOK		55.8	27.9				
	M-4N	4.0	0.27	1/4″ Male NPT		50.0	25.0				
	MS-4N4T			1/4″ Male NPT	1/4″ S-LOK	53.7	25.0	28.7			
	MS-4N6M			1/4″ Male NPT	6mm S-LOK						
	S-6M			6mm S-LOK		57.4	28.7				
	S-4T			1/4″ S-LOK							
SDNV2	F-4N	5.6	0.53	1/4″ Female NPT		54.0	27.0		14.2	31.8	51.3
	M-4N			1/4″ Male NPT		57.4	28.7				
	M-6N			3/8″ Male NPT							
	MF-4N			1/4″ Male NPT	1/4″ Female NPT	55.6	28.4	26.9			
	MS-4N6T			1/4″ Male NPT	3/8″ S-LOK	60.7	28.7	32.0			
	MF-8N4N			1/2″ Male NPT	1/4″ Female NPT	63.5	31.8	31.8			
	S-6T			3/8″ S-LOK		65.6	32.8				

* Dimensions are for reference only and are subject to change.

SDNV1	S	8T	A	PK	EP	S6
Valve Series	Connection Type	Connection Size	Flow Pattern	Seat Material	O-ring Material	Body Material

- **Nil :** Straight
- **A :** Angle Pattern

- **Nil :** PCTFE
- **PK :** PEEK

- **Nil :** FKM
- **NBR :** NBR
- **EP :** EPDM

- **S6 :** 316 Stainless Steel
- **BS :** Brass
- **A400 :** Alloy 400

STV50 Series 3-Way Test Cock Valves

Features

- Pressure rating up to 5000psig (344bar) at 21˚C (70˚F).
- Temperature rating from -54˚C (-65˚F) to 232˚C (450˚F) with standard PTFE packing and up to 315˚C (600˚F) with PEEK packing.
- One-piece forged 3-way test cock valve.
- Added one more port to needle valve for testing.
- Variety of end connections include reliable tube fittings, male/female NPT & ISO threads.
- Available Sour Gas service per NACE MR0175.

Materials of Construction

No	Component	Material	
		Stainless Steel	Brass
1	Body	SS316 / A182	Brass / B124
2	Stem	SS316 / A479 or A276	
3	Packing Ring	SS316 / A479 or A276	Brass / B16
4	Packing	PTFE (Optional PEEK)	
5	Gland	SS316 / A276	Brass / B16
6	Packing Nut	SS316 / A276	Brass / B16
7	Lock Nut	Stainless Steel	
8	Round Handle	Stainless Steel	
9	Name Plate	Aluminum	
10	Hex Nut	Stainless Steel	
11	ED-ring	NBR (Optional FKM)	
12	Plug	SS316 / A479 or A276	Brass / B16

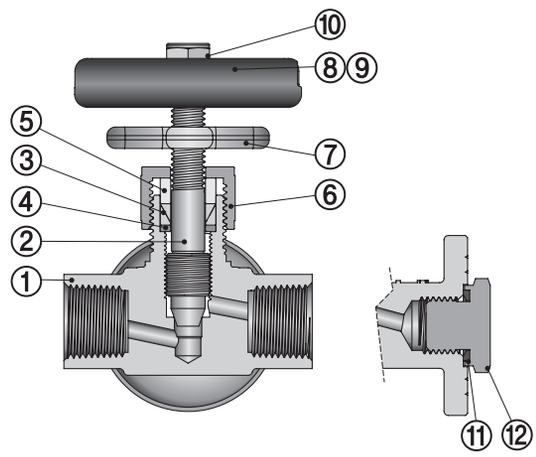

Technical Data

Pressure-Temperature Rating with Packing and Body Material

Valve Material	Stem	PTFE Packing (Standard)		PEEK Packing (Optional)	
		Temperature Range ˚C (˚F)	Pressure Rating @38˚C(100˚F)	Temperature Range ˚C (˚F)	Pressure Rating @Max. Temp.
Stainless Steel 316	Vee Stem (Metal Seat)	-54˚C to 232˚C (-65˚F to 450˚F)	5000psig (344 bar)	-54˚C to 315˚C (-65˚F to 600˚F)	3130psig (215 bar)
Brass	Vee Stem (Metal Seat)	-54˚C to 204˚C (-65˚F to 400˚F)	3000psig (206 bar)	-54˚C to 204˚C (-65˚F to 400˚F)	390psig (26 bar)

Testing

- Every valve is factory tested with Nitrogen @ 1000psig (69bar) for leak at the seats have a maximum allowable leak of 0.1 (SSCM).

Ordering Information & Dimensions

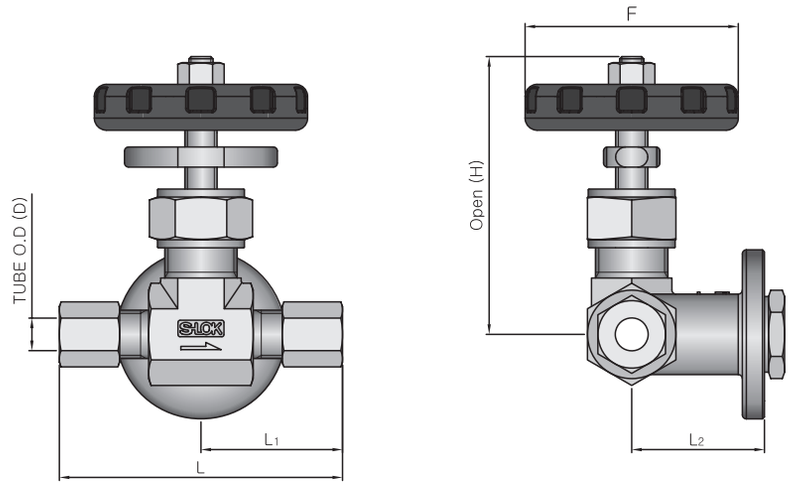

Ordering Number		Orifice (mm)	End Connections		Dimensions (mm)					
			Inlet	Outlet	D	L	L_1	L_2	F	H
STV	F-02R	4.0	1/8″ Female ISO Thread		-	50.0	25.0	33.0	53.0	69.0
	F-03R		3/8″ Female ISO Thread		-	58.0	29.0			
	M-02R		1/8″ Male ISO Thread		-	54.0	27.0			
	M-03R		3/8″ Male ISO Thread		-	58.0	29.0			
	B-06M		6mm JIS 2351 Bite		6.0	70.4	35.2			
	B-08M		8mm JIS 2351 Bite		8.0	69.8	34.9			
	B-10M		10mm JIS 2351 Bite		10.0	72.4	36.2			
	B-12M		12mm JIS 2351 Bite		12.0	75.6	37.8			
	S-2T		1/8″ S-LOK		3.17	58.4	29.2			
	S-4T		1/4″ S-LOK		6.35	63.4	31.7			
	S-6T		3/8″ S-LOK		9.52	66.4	33.2			
	S-8T		1/2″ S-LOK		12.7	72.0	36.0			
	S-6M		6mm S-LOK		6.0	63.4	31.7			
	S-8M		8mm S-LOK		8.0	65.2	32.6			
	S-10M		10mm S-LOK		10.0	67.0	33.5			
	S-12M		12mm S-LOK		12.0	72.0	36.0			

* Dimensions are for reference only and are subject to change.

STV	S	6M	PK	SG	S6
Valve Series	Connection Type	Connection Size	Packing Material	Sour Gas	Body Material

- **Nil :** PTFE
- **PK :** PEEK

- **Nil :** Standard
- **SG :** Sour Gas Service

- **S6 :** 316 Stainless Steel
- **BS :** Brass

STGV Series Toggle Valves

Features

- Working Pressure up to 300 psi (20.6 bar)
- Temperatures up to 200°F (93°F)
- Compact, rugged design
- Panel mountable
- Soft seat shutoff
- Quick opening and closing
- O-ring stem seals do not need adjustment
- Stainless steel and brass construction
- Straight and angle patterns available
- Every valve is 100% factory tested

Testing

- Every valve is factory tested for bubble-tight leakage at both seat and stem packing with nitrogen at 300psi (13.7bar).

Operation

- Lift the handle to fully open the valve.
- The handle stops firmly in the open position.
- Lower the handle, shutoff the valve by spring return.
- The soft seat provides positive seal.

Pressure – Temperature Ratings

Valve Series	Orifice mm (inch)	Working Pressure psi (bar)	Temperature ℉ (℃)
STGV1	2.0 (0.080)	300 (20.6)	-20 to 200 (-28 to 93)
	3.2 (0.125)		
STGV2	6.4 (0.250)	200 (13.7)	

Materials of Construction

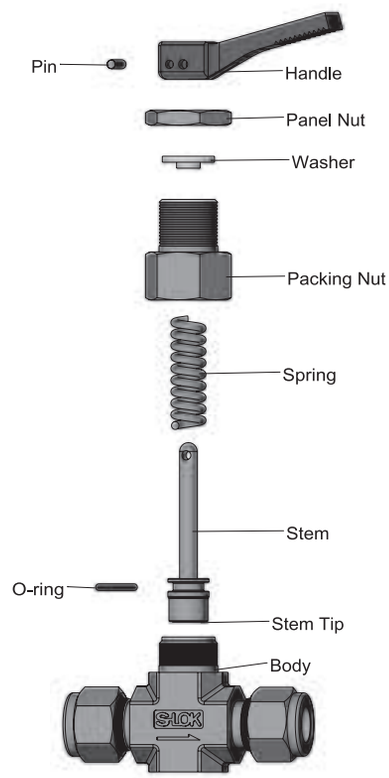

Component	Material	
	SS 316	Brass
Body	SS 316 / A182	Brass / B283
Packing Nut	SS 316 / A276	Brass / B16
Stem	SS 316 / A276	
Spring	SS 304	
Stem Tip	PTFE	
Washer	Nylon	
Handle	Nylon	
Panel Nut	SS 316 / A276	Brass / B16
O-ring	FKM	
Pin	Stainless Steel	

Table of Dimension

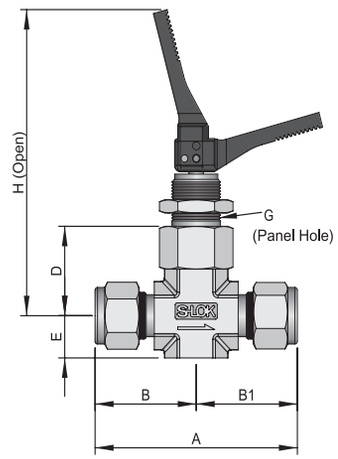

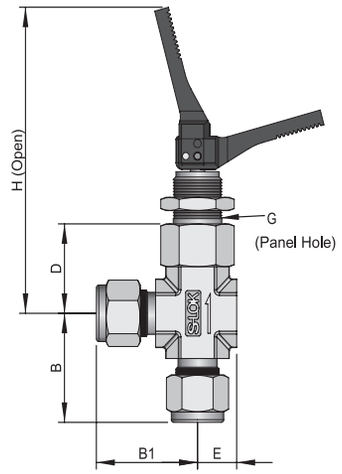

Ordering Number		End Connections		Cv	Orifice mm (inch)	Dimensions, mm (inch)						
		Inlet / Outlet	Size			A	B	B1	D	E	G	H
STGV1	S-2T	S-LOK	1/8"	0.11	2.0 (0.08)	49.8 (1.96)	24.9 (0.98)		23.4 (0.92)	7.9 (0.31)	13.5 (0.53)	73 (2.87)
	S-4T	S-LOK	1/4"	0.2	3.2 (0.125)	57.4 (2.26)	28.7 (1.13)		23.4 (0.92)	7.9 (0.31)	13.5 (0.53)	73 (2.87)
	S-3M	S-LOK	3mm	0.11	2.0 (0.08)	49.8 (1.96)	24.8 (0.98)		23.4 (0.92)	7.9 (0.31)	13.5 (0.53)	73 (2.87)
	S-6M	S-LOK	6mm	0.2	3.2 (0.125)	57.4 (2.26)	28.7 (1.13)		23.4 (0.92)	7.9 (0.31)	13.5 (0.53)	73 (2.87)
	S-8M	S-LOK	8mm	0.2	3.2 (0.125)	56.4 (2.22)	28.2 (1.11)		23.4 (0.92)	7.9 (0.31)	13.5 (0.53)	73 (2.87)
	F-2N	Female NPT	1/8"	0.2	3.2 (0.125)	41.4 (1.63)	20.7 (0.81)		23.4 (0.92)	7.9 (0.31)	13.5 (0.53)	73 (2.87)
	M-2N	Male NPT	1/8"	0.2	3.2 (0.125)	38.0 (1.5)	19.0 (0.75)		23.4 (0.92)	7.9 (0.31)	13.5 (0.53)	73 (2.87)
	M-4N	Male NPT	1/4"	0.2	3.2 (0.125)	46.0 (1.81)	23.0 (0.91)		23.4 (0.92)	7.9 (0.31)	13.5 (0.53)	73 (2.87)
	MS-2N2T	Male NPT / S-LOK	1/8"	0.11	2.0 (0.08)	43.9 (1.73)	19.0 (0.75)	24.9 (0.98)	23.4 (0.92)	7.9 (0.31)	13.5 (0.53)	73 (2.87)
	MS-4N4T	Male NPT / S-LOK	1/4"	0.2	3.2 (0.125)	51.7 (2.04)	23.0 (0.91)	28.7 (1.13)	23.4 (0.92)	7.9 (0.31)	13.5 (0.53)	73 (2.87)
	MF-2N	Male / Female NPT	1/8"	0.2	3.2 (0.125)	41.4 (1.63)	20.7 (0.81)		23.4 (0.92)	7.9 (0.31)	13.5 (0.53)	73 (2.87)
STGV2	S-6T	S-LOK	3/8"	0.7	6.4 (0.25)	65.5 (2.58)	32.8 (1.29)		26.9 (1.06)	12.7 (0.50)	16.8 (0.66)	88.6 (3.48)
	S-8T	S-LOK	1/2"	0.7	6.4 (0.25)	71.1 (2.8)	35.6 (1.4)		26.9 (1.06)	12.7 (0.50)	16.8 (0.66)	88.6 (3.48)
	S-10M	S-LOK	10mm	0.7	6.4 (0.25)	69.1 (2.72)	34.5 (1.36)		26.9 (1.06)	12.7 (0.50)	16.8 (0.66)	88.6 (3.48)
	S-12M	S-LOK	12mm	0.7	6.4 (0.25)	74.4 (2.93)	37.2 (1.46)		26.9 (1.06)	12.7 (0.50)	16.8 (0.66)	88.6 (3.48)
	F-4N	Female NPT	1/4"	0.7	6.4 (0.25)	53.8 (2.12)	26.9 (1.06)		26.9 (1.06)	12.7 (0.50)	16.8 (0.66)	88.6 (3.48)
	M-6N	Male NPT	3/8"	0.7	6.4 (0.25)	57.2 (2.25)	28.6 (1.12)		26.9 (1.06)	12.7 (0.50)	16.8 (0.66)	88.6 (3.48)

Dimensions are for reference only and are subject to change. Dimensions shown with S-LOK nuts finger-tight position.

Ordering Information

STGV1	-	S	-	2T	-	A	-	EP	-	S6
1		2		3		4		5		6

1. Valve Series

- **STGV1**
- **STGV2**

2. End Connection

- **S** : S-LOK
- **M** : Male Pipe Thread
- **F** : Female Pipe Thread
- **MS** : S-LOK x Male Pipe Thread
- **MF** : Male x Female Pipe Thread

3. Size Designator

- **2T** : 1/8”
- **4T** : 1/4”
- **6T** : 3/8”
- **8T** : 1/2”
- **3M** : 3mm
- **6M** : 6mm
- **8M** : 8mm
- **10M** : 10mm
- **12M** : 12mm
- **2N** : 1/8” NPT
- **4N** : 1/4” NPT
- **6N** : 3/8” NPT

4. Flow Pattern

- **Nil** : Straight
- **A** : Angle

5. O-ring Material

- **Nil** : FKM
- **NBR** : NBR
- **EP** : EPDM

6. Body Material

- **S6** : 316 Stainless Steel
- **BS** : Brass

SMTV Series
Low Pressure Metering Valves

Features

- Forged body SS316 or brass material.
- Straight and angle patterns.
- Variety of end connections include S-LOK, NPT & ISO threads Male/Female.
- Variety of handle options : knurled, round, vernier, slotted, and adjustable torque handles.
- Flow setting lock system : knurled and slotted handles.
- Handle stop design : Prevent damage to stem and orifice.
- Panel mounting is standard for all valves.
- Tapered stem tip : Provide a wide flow range with ultrafine metering control.

Material of Construction

Item	Component	Material	
		Stainless Steel	Brass
1	Body	SS316 / A182	Brass / B124
2	Body O-ring	FKM	NBR
2-1	Body Seal	Stainless Steel	
3	Bonnet	SS316 / A479 or A276	* Brass / B16
4	Lock Nut	SS316 / A479 or A276	* Brass / B16
5	Handle	Stainless Steel	* Brass / B16
5-1	Round Handle	Aluminum 6061	
6	Lock Screw	Stainless Steel	
7	Set Screw	Stainless Steel	
8	Stem O-ring	FKM	NBR
9	Stem	SS316 / A479 or A276	
10	Body Extension	SS316 / A479 or A276	* Brass / B16
11	Stem Guide Ring	PTFE	

* Chrome Plated

Technical Data

Pressure and Temperature Ratings

Valve Series	Temperature Ratings with O-ring Material			Pressure Rating @38°C(100°F)	Stem Taper	Flow Shut off
	FKM (Viton)	NBR	FFKM (Kalrez)			
SMTV1	-23°C to 204°C (-10°F to 400°F)	-23°C to 148°C (-10°F to 300°F)	-17°C to 148°C (0°F to 300°F)	2000psig (137 bar)	1°	No
SMTV2				1000psig (68.9 bar)	3°	No
SMTV3				1000psig (68.9 bar)	6°	Yes

Flow Data with Number of Handle Turns

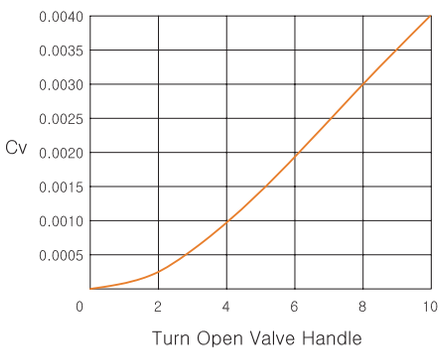

SMTV1 Series

Pressure Drop@ Atmoshpere psi (bar)	Air Flow Std. ft³/min. (Std. L/min.)	Water Flow U.S. gal/min. (L/min.)
10 (0.68)	0.04 (1.1)	0.01 (0.03)
50 (3.4)	0.1 (2.8)	0.02 (0.07)
100 (6.8)	0.2 (5.6)	0.04 (0.15)

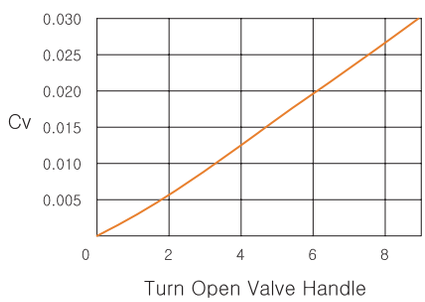

SMTV2 Series

Pressure Drop@ Atmoshpere psi (bar)	Air Flow Std. ft³/min. (Std. L/min.)	Water Flow U.S. gal/min. (L/min.)
10 (0.68)	0.33 (9.3)	0.09 (0.34)
50 (3.4)	0.9 (25.4)	0.21 (0.79)
100 (6.8)	1.5 (42.4)	0. (1.1)

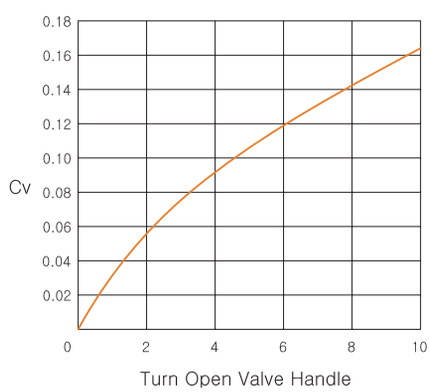

SMTV3 Series

Pressure Drop@ Atmoshpere psi (bar)	Air Flow Std. ft³/min. (Std. L/min.)	Water Flow U.S. gal/min. (L/min.)
10 (0.68)	2.0 (56.6)	0.51 (1.9)
50 (3.4)	6.4 (181.0)	1.2 (4.5)
100 (6.8)	11.4 (323.0)	1.7 (6.4)

Dimensions

Straight Pattern

Ordering Number		Orifice (mm)	Cv	End Connections		Dimensions (mm)			
				Inlet	Outlet	L	A	D	H
SMTV1	S-1T	0.81	0.004	1/16" S-LOK		39.6	58.0	23.9	9.6
	S-2T			1/8" S-LOK		48.2			
	S-3M			3mm S-LOK					
	S-4T			1/4" S-LOK		51.8			
	S-6M			6mm S-LOK					
SMTV2	S-2T	1.42	0.03	1/8" S-LOK		50.7	63.7	33.9	12.7
	S-3M			3mm S-LOK					
	S-4T			1/4" S-LOK		55.8			
	S-6M			6mm S-LOK					
	M-2N			1/8" Male NPT		38.1			
	M-4N			1/4" Male NPT		49.8			
	F-2N			1/8" Female NPT		49.3			
SMTV3	S-4T	3.25	0.16	1/4" S-LOK		59.4	73.0	34.4	28.7
	S-6M			6mm S-LOK					
	S-6T			3/8" S-LOK		62.5			
	M-4N			1/4" Male NPT		50.8			

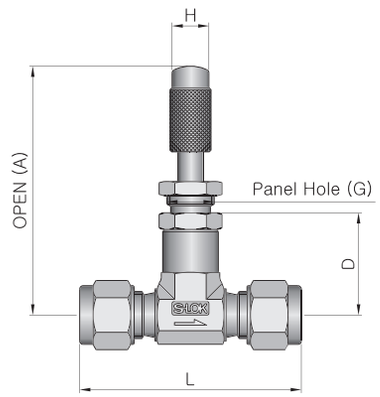

Series	Panel Hole (G)	Panel MaxThickness
SMTV1	11.4	4.1
SMTV2	14.7	3.3
SMTV3	14.7	3.3

Angle Pattern

Ordering Number		Orifice (mm)	Cv	End Connections		Dimensions (mm)				
				Inlet	Outlet	L1	L2	A	D	H
SMTV1	S-1T	0.81	0.004	1/16" S-LOK		20.6	22.4	58.0	23.9	9.6
	S-2T			1/8" S-LOK		24.1		58.0		
	S-3M			3mm S-LOK		24.9	25.1	58.0		
	S-4T			1/4" S-LOK		25.9		58.0		
SMTV2	S-2T	1.42	0.03	1/8" S-LOK		25.6		59.0	29.2	12.7
	S-3M			3mm S-LOK						
	S-4T			1/4" S-LOK		27.9		59.0		
	S-6M			6mm S-LOK						
	M-2N			1/8" Male NPT		19.5		59.0		
	M-4N			1/4" Male NPT		24.9		59.0		
	F-2N			1/8" Female NPT		24.2		59.0		
SMTV3	S-4T	3.25	0.16	1/4" S-LOK		28.7		73.0	34.4	28.7
	S-6M			6mm S-LOK						

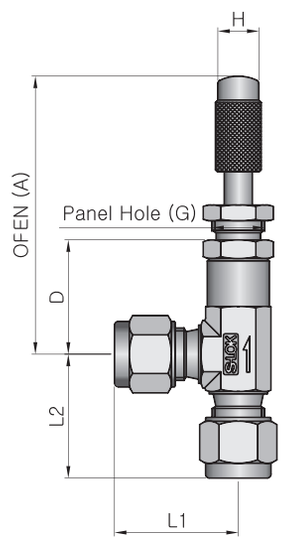

Series	Panel Hole (G)	Panel MaxThickness
SMTV1	11.4	4.1
SMTV2	14.7	3.3
SMTV3	14.7	3.3

Ordering Information

SMTV1	S	2T	A	KA	VH	S6
Valve Series	Connection Type	Connection Size	Flow Pattern	O-ring Material	Handle	Body Material

- **S** : S-LOK Tube Fitting
- **M**: Male Thread
- **F** : Female Threa

- **Nil :** Straight
- **A :** Angle Pattern

- **Nil :** FKM for SS316
  NBR for Brass
- **NB :** NBR
- **VT :** FKM
- **KA :** FFKM

- **S6 :** 316 Stainless Steel
- **BS :** BRASS

Handle Option

- **Nil** : SMTV1, 2 Series Standard for Locking Screw Handle
  SMTV3 Series Standard for Round Handle
- **SH** : SMTV1, 2 Series
- **AH** : SMTV1 Series
- **VH** : SMTV1, 2, 3 Series

SMTV1, 2 Standard
Locking Screw Handle

SMTV3 Standard
Round Handle

SH
Slotted Handle

AH
Adjustable Torque Handle

VH
Vernier Handle

SMTVH Series
High Pressure Metering Valves

Features

- SS316 bar stock body with straight and angle patterns.
- Variety of end connections include S-LOK, NPT & ISO threads Male/Female.
- Phenolic knob round handle.
- Panel mounting is standard for all valves.
- Union nut-prevents accidental disassembly of the valve in its service.
- Metal to metal flow shut off.
- 2° Tapered stem tip : Provide a wide flow range with ultrafine metering control.

Material of Construction

Item	Component	Material
1	Body	SS316 / A479 or A276
2	Bonnet	SS316 / A479 or A276
3	Stem	SS630 / A564 (17-4PH)
4	Gland	SS316 / A479 or A276
5	Packing	PTFE
6	Union Nut	SS316 / A479 or A276
7	Panel Nut	SS316 / A479 or A276
8	Packing Nut	SS316 / A479 or A276
9	Handle	Nylon with Brass Insert
10	Set Screw	Stainless Steel

Technical Data

Pressure and Temperature Ratings

ASME Material Group	Table 2-2.2
ASME Class Rating	2080
Temperature @ Pressure	psig (bar)
-54°C (-65°F) ~ 38°C (100°F)	5000 (344)
93°C (200°F)	4295 (295)
148°C (300°F)	3875 (266)
204°C (400°F)	3560 (245)
232°C (450°F)	3435 (236)
260°C (500°F)	3310 (228)
315°C (600°F)	3130 (215)
343°C (650°F)	3080 (212)
371°C (700°F)	3000 (206)
398°C (750°F)	2930 (201)
426°C (800°F)	2880 (198)
454°C (850°F)	2815 (193)

Flow Data with Number of Handle Turns

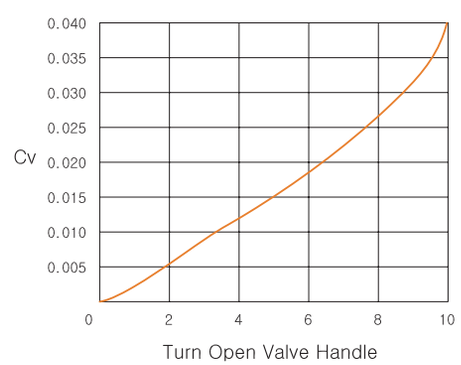

PressureDrop @Atmoshpere psi (bar)	Air Flow Std. ft^3/min. (Std. L/min.)	Water Flow U.S. gal/min. (L/min.)
10 (0.68)	0.04 (1.1)	0.01 (0.03)
50 (3.4)	0.1 (2.8)	0.02 (0.07)
100 (6.8)	0.2 (5.6)	0.04 (0.15)

Dimension

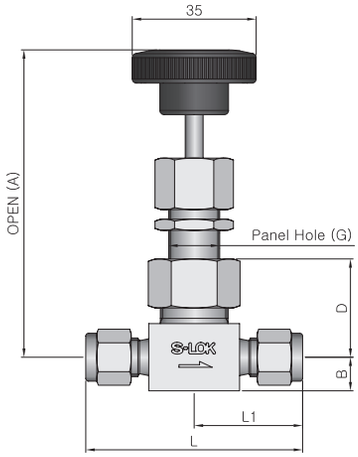

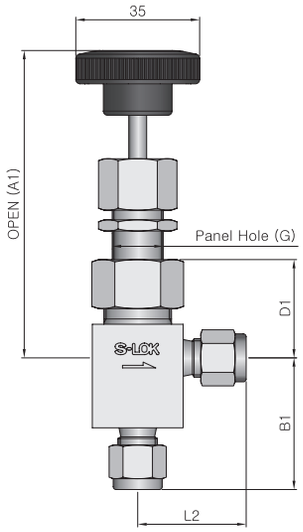

Panel Hole (G)	Panel Max Thickness
15.0	9.6

Ordering Number		Orifice (mm)	Cv	End Connections		Dimensions (mm)								
				Inlet	Outlet	L	L1	L2	A	A1	B	B1	D	D1
SMTVH	S-4T	1.6	0.04	1/4" S-LOK		60.6	30.3	29.5	87.8	87.8	9.6	37.6	28.1	28.1
	S-6M			6mm S-LOK										
	F-2N			1/8" Female NPT		50.8	25.4	23.1		92.9		25.4		32.9
	F-4N			1/4" Female NPT		52.4	26.2							

Testing

- Every valve is factory tested for bubble-tight leakage at both seat and stem packing with nitrogen at 1000psi (69bar).

Ordering Information

SMTVH	-	S	-	2T	-	A	-	GF	-	S6
Valve Series Designator		End Connection Designator		Inlet-Outlet Size Designator		Flow Pattern Designator		Packing Material Designator		Body Material Designator
		. **S** : S-LOK Tube Fitting . **M**: Male Thread . **F** : Female Thread				. **Nil** : Straight . **A** : Angle		. **Nil** : PTFE . **GF** : Graphite		. **S6** : Stainless Steel 316 . **BS** : Brass

S-LOK®

Check, Relief & Excess Flow Valves

The best partner for value creation
We support the innovations of customers

03

Catalogue No. S-LOK Mar.2024

SCV30 Series Check Valves

Features

- Pressure rating up to 3,000psig (206bar)@70˚F(21˚C).
- Temperature rating up to 375˚F(191˚C) with Standard FKM O-ring.
- Choice of materials : Standard S316 and Brass.
- Cracking pressures include : 1/3, 1, 3, 10, 25, 50psi.
- Heat code traceability.
- Every valve is 100% factory tested for cracking and reseal.

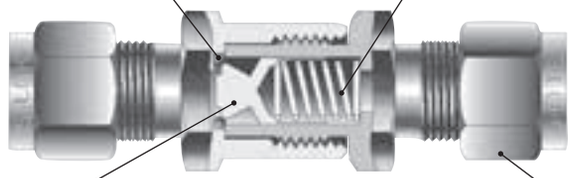

Features
- Ensures Valve closes bubble tight

Fixed Cracking Pressures
- From 1/3psi to 50psi

Back stopped Poppet
- Minimize Spring stress

Various End Connections
- include S-LOK Tube Fittings
- NPT & ISO Male/Female Threads

Technical Data

Valve Series	SCV1, SCV2, SCV3, SCV4	SCV5, SCV6
Max. Working Pressure @70˚F(21˚C)	SS316 and Brass : 3000psi (206bar)	SS316 : 2000psi (137bar) Brass : 1500psi (103bar)
Operating Temperature Range	FKM : -10˚F to 375˚F(-23˚C to190˚C) NBR : -4˚F to 221˚F(-20˚C to 105˚C)	
Nominal Cracking Pressure	1/3, 1, 3, 10, 25, 50psi	

Cracking, Reseal and Back Pressure

Cracking Pressure

The upstream pressure at which a detectable flow is Measured. The Check valve is actuated when the pressure difference between the inlet and the outlet reaches the range of cracking pressure.

Reseal Pressure

The downstream pressure at which the check valve closes bubble-tight. The Check valves that have higher cracking pressure can be resealed to bubble-tight by the spring force. The reseal pressure is the pressure at the same flow direction, but lower than the cracking pressure.

Back Pressure

The Check valves that have cracking pressure 5psig(0.34bar) and lower may not be able to return to the bubble-tight seal. This may require back pressure to press the seal to form a bubble-tight contact in addition to the spring force.

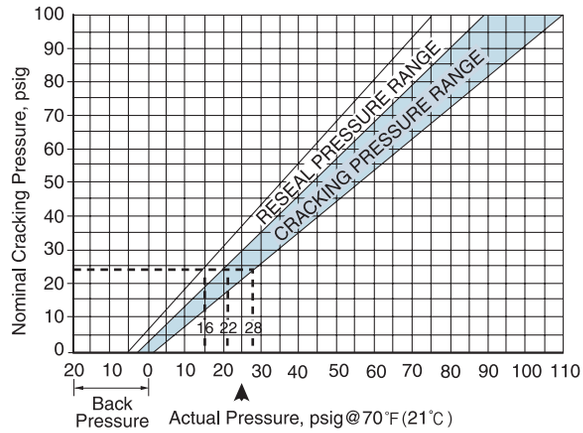

Note

- When the check valve is not actuated for a period of time, it may require initially crack at higher than the above cracking pressure ranges.
- Check valves are designed for directional flow control only. Therefore HANSUN check valves should never be used as code Safety relief devices.

Materials of Construction

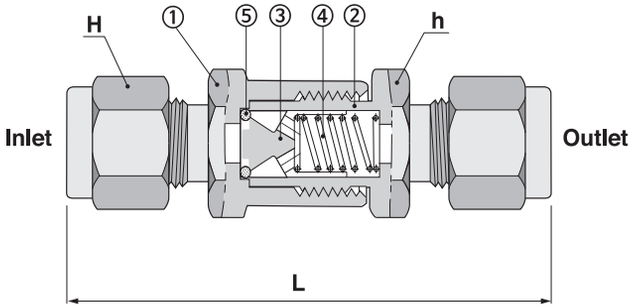

Item	Description	Materials	
		SS316	Brass
1	Body	SS316 / A479 or A276	Brass
2	Connector		
3	Poppet		
4	Spring	SS304	
5	O-ring	FKM	

* Silicone-based Lubricant for poppet.

Ordering Information and Dimensions

Basic Ordering Number		Orifice mm(inch)	Cv	End Connections Inlet/Outlet		Dimensions(mm)		
						h	H	L
SCV1	S-2T	2.28(0.09)	0.16	1/8″ S-LOK		15.88(5/8)	11.11(7/16)	55.60(2.19)
	M-2N	4.8 (0.19)	0.47	1/8″ Male NPT			-	44.40(1.75)
	F-2N			1/8″ Female NPT			-	46.50(1.83)
	S-4T			1/4″ S-LOK			14.29(9/16)	60.00(2.36)
	S-6M			6mm S-LOK			14.00	
	MS-4N4T			1/4″ Male NPT	1/4″ S-LOK		14.29(9/16)	56.40(2.22)
	M-4N			1/4″ Male NPT			-	53.40(2.10)
SCV2	F-4N	7.1 (0.28)	1.48	1/4″ Female NPT		19.05(3/4)	-	56.80(2.24)
	S-6T			3/8″ S-LOK″			17.46(11/16)	65.50(2.58)
	S-10M			10mm S-LOK			19.00	
	M-6N			3/8″ Male NPT			-	55.50(2.19)
SCV3	F-6N	10.0 (0.39	1.7	3/8″ Female NPT		22.22(7/8)	-	63.80(2.51)
	S-8T			1/2″ S-LOK			22.22(7/8)	80.20(3.16)
	S-12M			12mm S-LOK			22.00	
	M-8N			1/2″ Male NPT			-	74.40(2.93)
SCV4	F-8N	13.5 (0.53)	2.6	1/2″ Female NPT		28.58(1-1/8)	-	84.70(3.33)
	S-10T			5/8″ S-LOK			25.40(1)	91.80(3.61)
SCV5	S-12T	16.0 (0.63)	5.2	3/4″ S-LOK		31.75(1-1/4)	28.58(1-1/8)	110.70(4.35)
	M-12N			3/4″ Male NPT			-	105.30(4.15)
	F-12N			3/4″ Female NPT			-	103.00(4.06)
SCV6	S-16T	18.0 (0.71)	8.0	1″ S-LOK		41.28(1-5/8)	38.1(1-1/2)	121.10(4.77)
	M-16N			1″ Male NPT			-	116.20(4.57)
	F-16N			1″ Female NPT			-	111.40(4.39)

Spring Cracking, Reseal and Back Pressure at @70°F(21°C)

Spring Nominal Cracking Pressure		Cracking Pressure Ranges				Reseal Pressure	
		Min. Pressure		Max. Pressure			
psig	bar	psig	bar	psig	bar	psig	bar
1/3	0.02	0	0	3	0.21	Up to 6	0.41
						Back pressure	
1	0.07	0	0	4	0.28	Up to 5	0.34
						Back pressure	
3	0.21	2	0.14	7	0.48	Up to 4	0.28
						Back pressure	
10	0.69	7	0.48	15	1.03	3	0.21
25	1.72	20	1.38	30	2.07	17	1.17
50	3.45	40	2.76	60	4.14	35	2.41
75	5.17	60	4.14	90	6.2	53	3.65
100	6.89	80	5.51	120	8.27	70	4.82

Pressure-Temperature Ratings

Ratings based on FKM O-ring in SS316 stainless steel valves and NBR O-ring in brass valves.

Series	SCV1, SCV2 SCV3, SCV4		SCV5, SCV6	
Temperature °F(°C)	Working Pressure, psig (bar)			
	SS316	Brass	SS316	Brass
-10(-23) to 100(37)	3000(206)	3000(206)	2000(137)	1500(103)
200(93)	2575(177)	2600(179)	1715(118)	1300(89)
250(121)	2450(168)	2405(165)	1630(112)	1250(86)
300(148)	2325(160)	-	1545(106)	-
375(190)	2185(150)	-	1450(99.9)	-
400(204)				

SCP30 Series
Compact One Piece Check Valves

Features

- Pressure rating up to 3,000psig (206bar)@70˚F(21˚C).
- Temperrature rating up to 375˚F(191˚C) with Standard FKM O-ring.
- Compact one-piece body.
- Fully contained O-ring seal blow-out proof design.
- Choice of materials : Standard S316 and Brass.
- Cracking pressures include : 1/3, 1, 3, 10, 25, 50psi.
- Heat code traceability.
- Every valve is 100% factory tested for cracking and reseal.

Materials of Construction

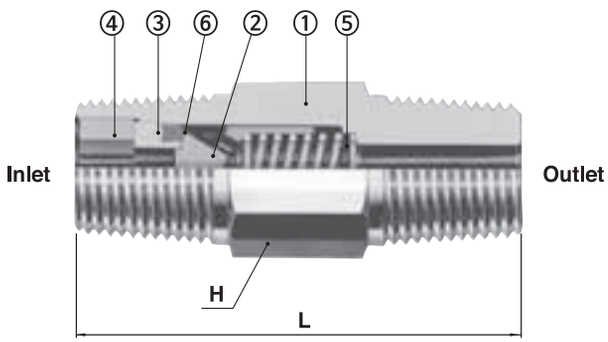

Item	Description	Materials	
		SS316	Brass
1	Body	SS316 / A276 or A479	Brass
2	Poppet		
3	Insert		
4	Locking Screw		
5	Spring	SS304	
6	O-ring	FKM	NBR

* Silicone-based Lubricant for poppet.

Ordering Information and Dimensions

Basic Ordering Number		Cv	End Connections			Dimensions mm(inch)	
			Size	Inlet	Outlet	L	H
SCP1	M-4N	0.35	1/4″	Male NPT		41.1(1.62)	14.28(9/16)
	M-4R		1/4″	Male ISO			
	F-4N		1/4″	Female NPT		61.2(2.41)	19.05(3/4)
	F-4R		1/4″	Female ISO		64.5(2.54)	
	MF-4N		1/4″	Male NPT	Female NPT	44.4(1.75)	
	FM-4N		1/4″	Female NPT	Male NPT	58.2(2.29)	
SCP2	M-8N	1.20	1/2″	Male NPT		57.9(2.28)	22.22(7/8)
	F-8N		1/2″	Female NPT		94.2(3.71)	26.98(1-1/16)
	MF-8N		1/2″	Male NPT	Female NPT	71.9(2.83)	

All dimensions shown are for reference only and are subject to change.

Spring Cracking, Reseal and Back Pressure at @70˚F(21˚C)

Spring Nominal Cracking Pressure		Applied Working Pressures–psig(bar)				Reseal Pressure	
		Min. Pressure		Max. Pressure			
psig	bar	psig	bar	psig	bar	psig	bar
1/3	0.02	0	0	3	0.21	up to 6	0.41
						Back pressure	
1	0.07	0	0	4	0.28	up to 5	0.34
						Back pressure	
10	0.69	7	0.48	15	1.03	3	0.21
25	1.72	20	1.38	30	2.07	17	1.17

SCA30 Series
Adjustable One Piece Check Valves

Features

- Pressure rating up to 3,000psig (206bar)@700˚F(21˚C).
- Cracking pressure adjustable from 3 to 600psi (0.2 to 41.4 bar)
- Temperature rating up to 375˚F(191˚C) with Standard FKM O-ring.
- Choice of materials : Standard S316 and Brass.
- Compact one-piece body.
- Heat code traceability.
- Every valve is 100% factory tested for cracking and reseal.

Materials of Construction

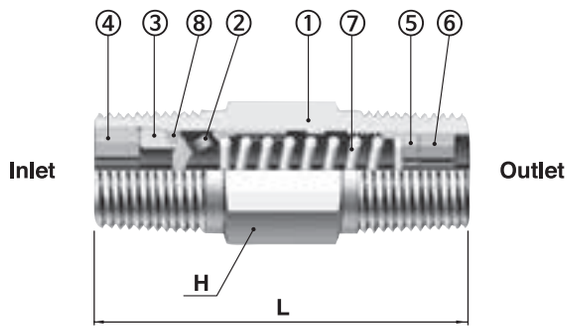

Item	Description	Materials	
		SS316	Brass
1	Body	SS316 / A276 or A479	Brass
2	Poppet		
3	Insert		
4	Insert Lock Screw		
5	Adjusting Screw		
6	Locking Screw		
7	Spring	SS304	
8	O-ring	FKM	NBR

* Silicone-based Lubricant for poppet.

Ordering Information and Dimensions

Basic Ordering Number		Cv	End Connections			Dimensions mm(inch)	
			Size	Inlet	Outlet	L	H
SCA1	F-4N	0.35	1/4″	Female NPT		75.7(2.98)	19.05(3/4)
	M-4N		1/4″	Male NPT		41.1(1.62)	14.28(9/16)
	M-4R		1/4″	Male BSPT		41.1(1.62)	14.28(9/16)
SCA2	M-8N	1.20	1/2″	Male NPT		65.0(2.56)	22.22(7/8)
	M-8R		1/2″	Male BSPT		65.0(2.56)	22.22(7/8)

To order, add a cracking pressure range designator to the basic ordering number and then specify valve material designator.
Example : SCA1-M-4N-3-S6

Spring Cracking Pressure Range Designator

Designator	Cracking Pressure	
	psi	bar
3	3 to 50	0.21 to 3.5
50	50 to 150	3.5 to 10.4
150	150 to 350	10.4 to 24.2
350	350 to 600	24.2 to 41.4

Pressure-Temperature Ratings

Ratings based on Viton O-ring in SS316 stainless steel valves and NBR O-ring in brass valves.

Series	SCA / SCP	
Temperature ˚F(˚C)	Working Pressure, psig (bar)	
	SS316	Brass
-10(-23) to 100(37)	3000(206)	3000(206)
200(93)	2575(177)	2600(179)
250(121)	2450(168)	2405(165)
300(148)	2325(160)	-
375(190)	2185(150)	-

SCH60 Series High Pressure Check Valves

Features

- Pressure rating up to 6000psi (413bar) @70˚C(21˚C).
- Temperature rating up to 375°F(191˚C)with standard FKM O-ring.
- S316 Stainless steel body as standard.
- Suitable for gas and liquids.
- Cracking pressures include : 1/3, 1, 5, 10, 25psi.
- Heat code traceability.
- Every valve is 100% factory tested for cracking and reseal.

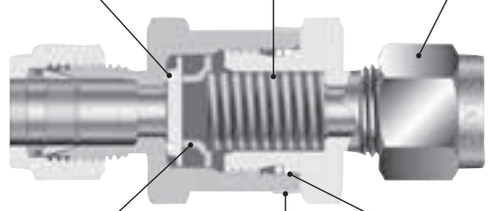

Technical Data

Pressure and Temperating Ratings

Description	SS316		
Series	SCH1	SCH2	SCH3
Working Pressure and Back Pressure @ 70˚F(21˚C)	6000psi (413bar)		5000psi (344bar)
Operating Temperature Range	FKM : -10˚F to 375˚F (-23˚C to 190˚C)		
Nominal Cracking Pressure	1/3, 1, 5, 10, 25psig		

Optional O-ring Seal Materials

Material	Designator	Temperature Rating℃(˚F)	Application
NBR	NB	-20˚C to 105˚C (-4˚F to 221˚F)	Petroleum-based hydraulic and lubricating oils, animals and vegetable oils, acetylene, alcohols, air, alkalis, fuel oils and many other media.
FKM (Viton)	VT	-23˚C to 190˚C (-10˚F to 375˚F)	High-quality compounds for high temperatures, Synthetic and hydraulic fluids; a wide range of chemicals, heavily oxidizing acids, suitable for vacuum.
EPDM	EP	-45˚C to 148˚C (-50˚F to 300˚F)	Chemical resistance : nonflammable hydraulic fluids (Skydrol, Pydraul, Lindol, Cellulube 150, phosphoric esters), pure aniline, fire extinguisher liquids (chlorobromo-methane), acid ;excellent resistance to hot water and steam.
FFKM	KA	-20˚C to 275˚C (-4˚F to 527˚F)	Superior compounds for high temperature and most chemicals. This compound combines the chemical properties of PTFE with the mechanical properties of Viton.

* Viton is standard for S316 valves and NBR is standard for Brass valves.

Testing

- Every valve is factory tested for cracking and reseal performance.

Materials of Construction

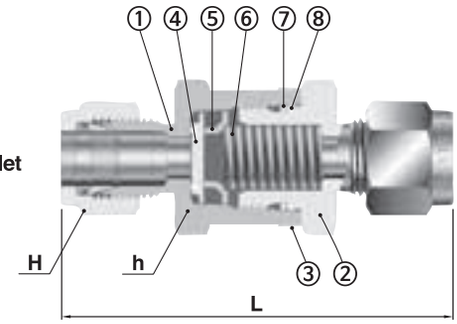

Item	Description	Materials
1	Body	SS316 / A479 or A276
2	Connector	
3	Indicator Ring	
4	Poppet	Viton-bonded SS316
5	Poppet Stopper	SS316 / A479 or A276
6	Spring	SS304
7	O-ring	FKM
8	Back Up Ring	PTFE

* Silicone-based Lubricant for poppet. Wetted parts are listed in orange color.

Dimensions

Basic Ordering Number		Orifice mm	Cv max.	End Connections			Pressure Rating psig(bar)	Dimensions, mm(inch)		
				Size	Inlet	Outlet		L	H	h
SCH1	S-2T	4.8	0.67	1/8″	S-LOK		6000(413)	57.7(2.27)	(7/16)	(11/16)
	S-4T			1/4″	S-LOK			61.7(2.43)	(9/16)	
	S-6M			6mm	S-LOK				14.0	
	F-4N			1/4″	Female NPT			54.1(2.13)	-	
	M-2N			1/8″	Male NPT			45.5(1.79)		
	M-4N			1/4″	Male NPT			55.1(2.17)		
SCH2	S-6T	7.8	1.8	3/8″	S-LOK		6000(413)	69.9(2.75)	(11/16)	(1)
	S-8T			1/2″	S-LOK			75.2(2.96)	(7/8)	
	S-8M			8mm	S-LOK			68.6(2.70)	16.0	
	S-10M			10mm	S-LOK			71.1(2.80)	19.0	
	S-12M			12mm	S-LOK			75.2(2.96)	22.0	
	F-6N			3/8″	Female NPT		5000(344)	64.8(2.55)	-	
	F-8N			1/2″	Female NPT		4600(316)	77.0(3.03)		(1-1/16)
	M-6N			3/8″	Male NPT		6000(413)	59.9(2.36)		(1)
	M-8N			1/2″	Male NPT			69.3(2.73)		
	F-8R			1/2″	Female ISO		4600(316)	83.6(3.29)		(1-1/16)
	M-8R			1/2″	Male ISO		6000(413)	69.3(2.73)		(1)
SCH3	S-12T	15.0	4.7	3/4″	S-LOK		5000(344)	89.4(3.52)	(1-1/8)	(1-5/8)
	S-16T			1″	S-LOK			98.6(3.88)	(1-1/2)	
	S-22M			22mm	S-LOK			88.4(3.48)	32.0	
	S-25M			25mm	S-LOK			98.6(3.88)	40.0	
	F-12N			3/4″	Female NPT		4300(296)	82.0(3.23)	-	
	F-16N			1″	Female NPT		4100(282)	97.3(3.83)		
	M-12N			3/4″	Male NPT		5000(344)	83.6(3.29)		
	M-16N			1″	Male NPT			93.2(3.67)		
	F-12R			3/4″	Female ISO		4300(296)	82.0(3.23)		
	F-16R			1″	Female ISO		4100(282)	97.3(3.83)		
	M-12R			3/4″	Male ISO		5000(344)	85.1(3.35)		
	M-16R			1″	Male ISO			93.2(3.67)		

Spring Cracking, Reseal and Back Pressure at @70˚F(21˚C)

Nominal Spring Cracking Pressure		Applied Working Pressures				Reseal Pressure	
		Min. Pressure		Max. Pressure			
psi	bar	psi	bar	psi	bar	psi	bar
1/3	0.02	0	0	3	0.21	Up to 6	0.41
						Back pressure	
1	0.07	0	0	4	0.28	Up to 5	0.34
						Back pressure	
5	0.34	3	0.21	9	0.62	Up to 2	0.14
						Back pressure	
10	0.69	7	0.48	15	1.03	3	0.21
25	1.72	20	1.38	30	2.07	17	1.17

Pressure-Temperature Ratings

Ratings based on FKM O-ring in SS316 stainless steel valves

Series	SCH1, SCH2	SCH3
Temperature˚F(˚C)	Working Pressure, psig (bar)	
-10(-23) to 100(37)	6000(413)	5000(344)
200(93)	5160(355)	4290(295)
250(121)	4910(338)	4080(281)
300(148)	4660(321)	3875(267)
375(190)	4375(301)	3640(250)
400(204)	4280(294)	3560(245)

Options

Sour Gas Service

- For sour gas application, materials for wetted components are selected according to NACE MR 0175.

Pressure Rating at 70˚F(21˚C)	SCH1 and SCH2 Series : 5000psig(344bar) SCH3 Series : 4700psig(323bar)
Temperature Rating	-50˚F to 300˚F(-45˚C to 148˚C)
Norminal Cracking Pressure	1/3, 1, and 5psig(0.02, 0.07, 0.34bar)
End Connections	1/4, 3/8, 1/2, 3/4, and 1″ S-LOK Tube Fittings
Material of Construction	Poppet stopper-SS316 Spring-Alloy X750 Back up ring-PTFE Indicator ring-stainless steel

To order, add designator-SG as a suffix to the basic part number with cracking pressure.
Example : SCH1-S-4T-1/3-**SG**-S6

Fluorocarbon-Free Service

- For system where, PTFE and fluorinated compounds can not be tolerated.

Pressure Rating at 70˚C(21˚C)	Same as standard product. (See standard technical data)
Temperature Rating	-50˚F to 300˚F(-45˚C to 148˚C)
Norminal Cracking Pressure	Same as standard product. (See standard technical data)
End Connections	All end connection type and sizes. (See table of dimensions)
Material of Construction	Body, Poppet, Poppet stopper-SS316 Seals-ethylene propylene Spring-SS304 Back up ring-PEEK Indicator Ring-stainless steel Lubricant-hydrocarbon based

To order, add designator-FF as a suffix to the basic part number with cracking pressure.
Example : SCH1-S-4T-1/3-**OF**-S6

CNG / NGV Certifications

- CNG / NGV Check Valve Series with CNG / NGV Compatible HNBR O-ring are available with CNG / NGV Certifications

Certificates	ECE R110	ANSI NGV 3.1 - 2012	ISO 15500
Certificate No.	110R-010335	126842AUT16	126842MECH105
Classification	Class 0	Manual valve	Manual valve
Temperature	-40 to 120˚C (-40 to 248˚F)	-40 to 120˚C (-40 to 248˚F)	-40 to 120˚C (-40 to 248˚F)
Working Pressure	260 bar @ 120˚C	248 bar @ 120˚C	260 bar @ 120˚C

Ordering Information

SCH3	S	8T	1/3	NB	SG	S6
Valve Series	Connection Type	Connection Size	Cracking Pressure	O-ring Material	Option	Body Material

- **SCH1~3** : Standard
- **SCHC~3** : CNG/NGV Service

- **1/3** : 1/3psi
- **1** : 1psi
- **5** : 5psi
- **10** : 10psi
- **25** : 25psi

- **NB** : NBR
  Nil for Brass
- **VT** : FKM
  Nill for SS316
- **EP** : EPDM
- **KA** : FFKM

- **SG** : Sour Gas Service
- **OF** : Oil Free Service

- **S6** : SS316 Stainless Steel
- **BS** : Brass

SRV Series Relief Valves

Low Pressure Relief Valve – SRV30

- Max. Working Pressure : 300 psi (21 bar)
- Cracking Pressure Range : 10 to 250psi(0.68 to 17.2bar)
- Orifice : 0.19 in. (4.8 mm)

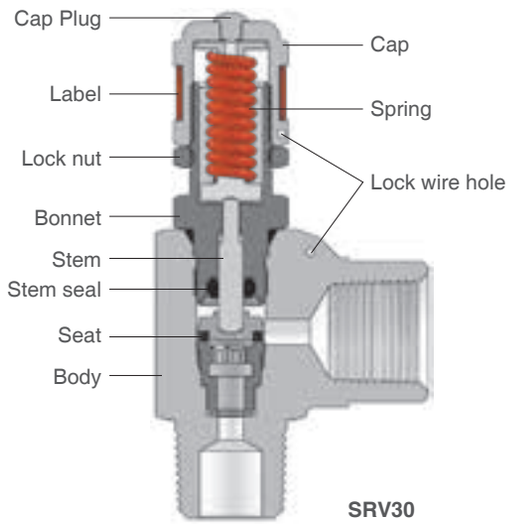

High Pressure Relief Valve – SRV60

- Max. Working Pressure : 6000 psi (413 bar)
- Cracking Pressure Range : 50 to 6000 psi(3.4 to 413 bar)
- Orifice : 0.14 in. (3.6 mm)

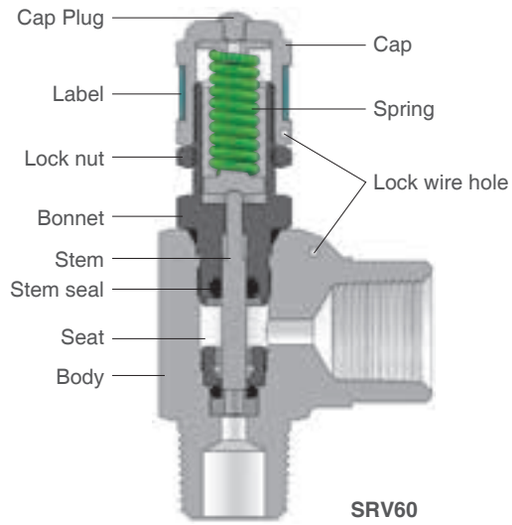

Materials of Construction

Component	Material
Cap Plug	Polypropylene
Cap	SS316 / A276
Bonnet	SS316 / A276
Stem	SS316 / A276
Poppet	SS316 / A276
Seal	FKM (Standard)
Body	SS316 / A182

Applications

SRV series relief valves gradually open as pressure increases.
SRV series relief valves have not certified to ASME or any other codes.

Operation

SRV series relief valves open when the system pressure reaches the cracking pressure and close when the system pressure falls below the cracking pressure.

Cracking Pressure

Cracking pressure range of each valve after initial relief. (whichever is greater)

- Below 60˚F (15˚C) : ± 6 psi (0.4bar) or ± 20 %
- 60 to 80˚F (15 to 26˚C) : ± 3 psi (0.2bar) or ± 5 %
- Above 80˚F (26˚C) : ± 6 psi (0.4bar) or ± 20 %

Pressure – Temperature Ratings

Ratings are limited depending on the material. Valves are standard with FKM Seat and Seal.

Temperature, ˚F (˚C)	Max. Cracking Pressure, psi (bar)	
	SRV30	SRV60
-40 (-40) to 70 (20)	250 (17.2)	6000 (413)
150 (65)	250 (17.2)	5580 (384)
200 (93)	250 (17.2)	5160 (355)
250 (121)	250 (17.2)	4910 (338)
275 (135)	250 (17.2)	-
300 (148)	250 (17.2)	-

Seal Material	Designator	Temperature, ˚F (˚C)	
		SRV30	SRV60
FKM	VT	10 ~ 275(-12 ~ 135)	25 ~ 250(-4 ~ 121)
NBR	NBR	-10 ~ 300(-23 ~ 148)	0 ~ 250(-17 ~ 121)
EPDM	EP	-40 ~ 300(-40 ~ 148)	30 ~ 250(-1 ~ 121)
FFKM	KA	-30 ~ 300(-1 ~ 148)	30 ~ 200(-1 ~ 93)

Ordering Information and Dimensions

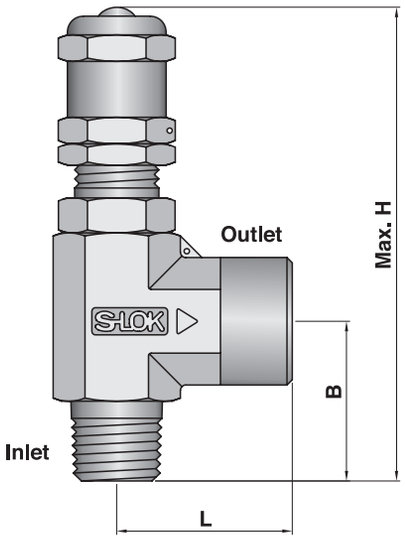

SRV Series Spring

Designator	Cracking Pressure Range		Color
	psi	bar	
SRV30 series spring			
L	10 to 250	0.68 to 17.2	Red
LA	10 to 40	0.68 to 2.75	Purple
SRV60 series spring			
A	50 to 350	3.4 to 24.1	White
B	350 to 750	24.1 to 51.7	Blue
C	750 to 1500	51.7 to 103	Clear
D	1500 to 2250	103 to 155	Black
E	2250 to 3000	155 to 206	Green
F	3000 to 4000	206 to 275	Yellow
G	4000 to 5000	275 to 344	Brown
H	5000 to 6000	344 to 413	Orange

Basic Ordering NO.		End Connection		Dimensions mm (in.)		
		Inlet / Outlet	Size	H	B	L
SRV30 or SRV60	S-4T	S-LOK	1/4 ″	100 (3.93)	37 (1.45)	39 (1.54)
	S-6T	S-LOK	3/8 ″	100 (3.93)	38.5 (1.52)	40.5 (1.59)
	S-8T	S-LOK	1/2 ″	105 (4.13)	44 (1.73)	42 (1.65)
	S-6M	S-LOK	6mm	100 (3.93)	38 (1.49)	40 (1.57)
	S-8M	S-LOK	8mm	100 (3.93)	38 (1.49)	40 (1.57)
	S-12M	S-LOK	12mm	105 (4.13)	44 (1.73)	42 (1.65)
	MS-8N8T	Male NPT / S-LOK	1/2 ″	98 (3.85)	36 (1.41)	42 (1.65)
	MS-8N12M	Male NPT / S-LOK	1/2 ″ / 12mm	98 (3.85)	36 (1.41)	42 (1.65)
	MF-4N	Male / Female NPT	1/4 ″	94 (3.70)	32 (1.25)	30 (1.18)
	MF-6N	Male / Female NPT	3/8 ″	94 (3.70)	32 (1.25)	35 (1.37)
	MF-8N	Male / Female NPT	1/2 ″	98 (3.85)	36 (1.41)	38 (1.49)

* Dimensions are for reference only and are subject to change. Dimensions shown with S-LOK nuts finger-tight position.

Relief Valve - SRV Series

• The valve contains a spring, and the set pressure must be adjusted. It is possible to supply after setting pressure to desired pressure.

SRV60	S	8T	B	EP	S6
Valve Series	Connection Type	Connection Size	Spring Designator	O-ring Material	Body Material

Spring Kit

• Spring kits include spring, label, lock wire with lead seal and replacement instruction

SRV60	SPRKIT	H
Valve Series	Spring Kit	Spring Designator

Seal Kit

• Seal kits include poppet, bonnet assembly and replacement instruction

SRV30	SKIT	NBR
Valve Series	Seal Kit	Seal Designator

SRV60C Series Relief Valves

Features

- Pressure rating up to 6,000psig (413bar)
- Liquid or gas service
- Adjusts to provide desired set pressure
- Provides elastomer to metal seal for positive shutoff at seat
- Set pressure from 200 psig to 5500 psig

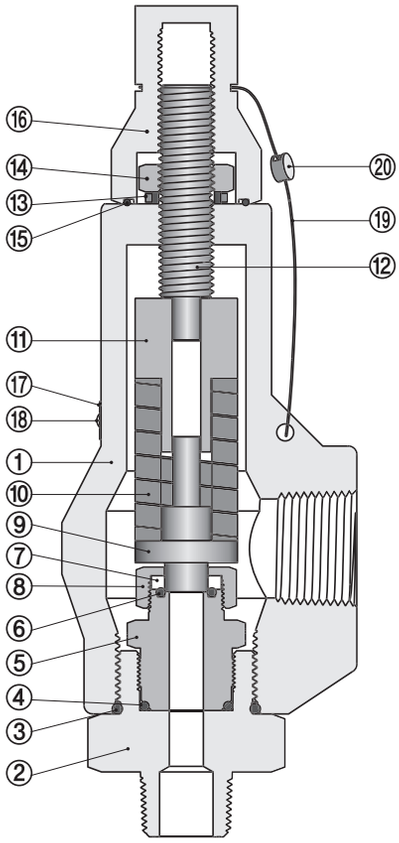

Materials of Construction

No	Component	Material
1	Body	CF3M A351
2	End Connector	SS316 A276/A479
3	O-Ring	FKM
4	O-Ring	FKM
5	Holder	SS316 A276/A479
6	O-Ring	FKM
7	Support	SS316 A276/A479
8	Lock Nut	SS316 A276/A479
9	Stem	SS316 A276/A479
10	Spring	UNS G92540
11	Spring Keeper	Stainless Steel
12	Adjustable Screw	Stainless Steel
13	Thread Seal	NBR + Steel
14	Jam Nut	Stainless Steel
15	O-Ring	NBR
16	Cap	Stainless Steel
17	Nameplate	Stainless Steel
18	Knurled Pin	Stainless Steel
19	Wire	Stainless Steel
20	Lead Seal	Lead(Pb)

Flow Data at 20°(70°)

Air

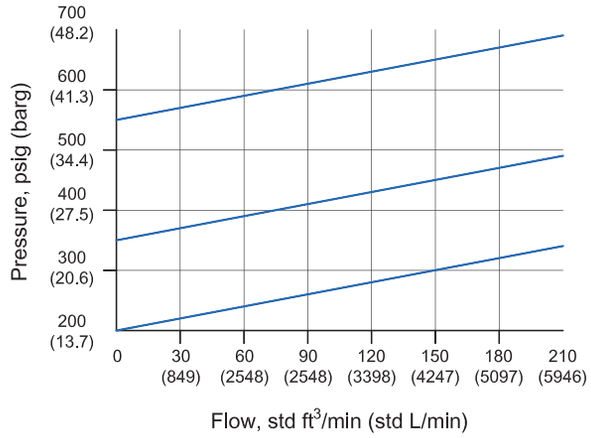

Water

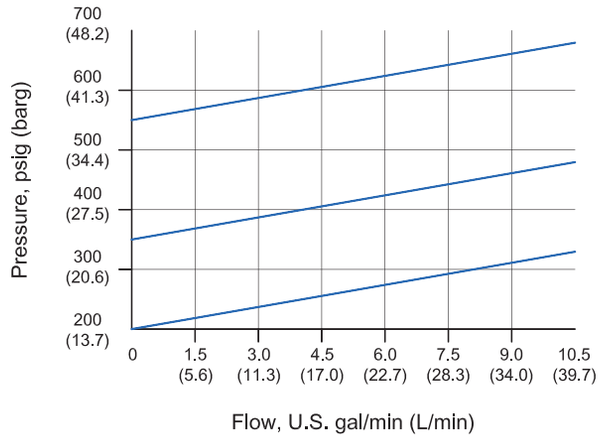

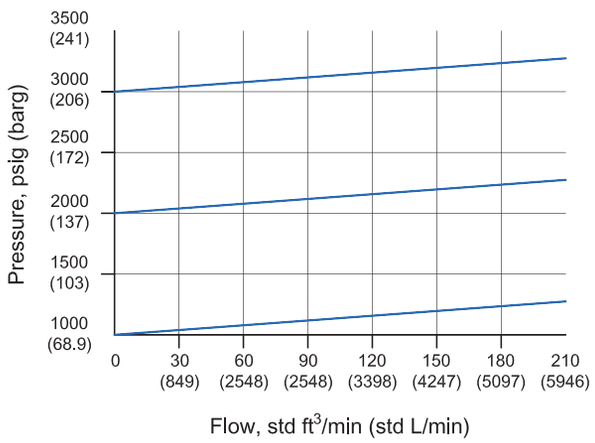

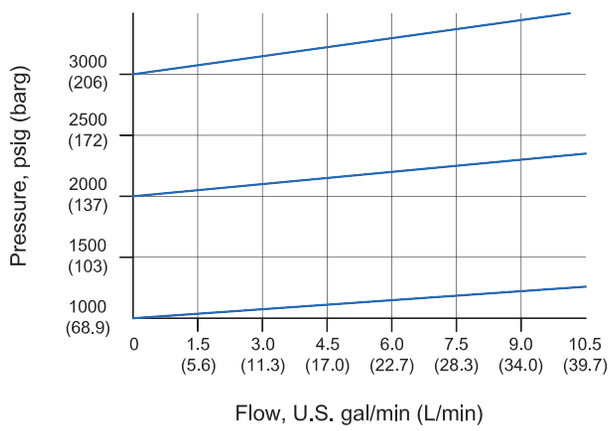

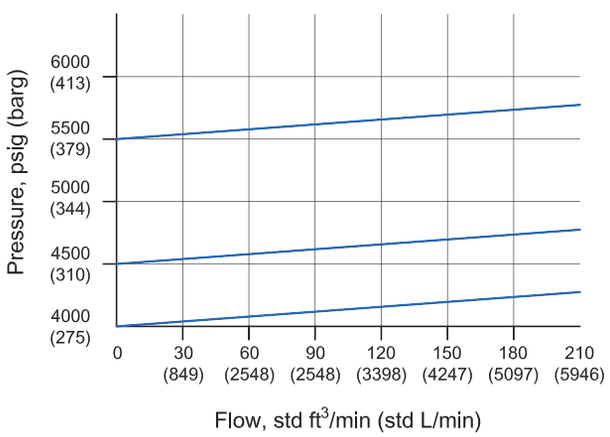

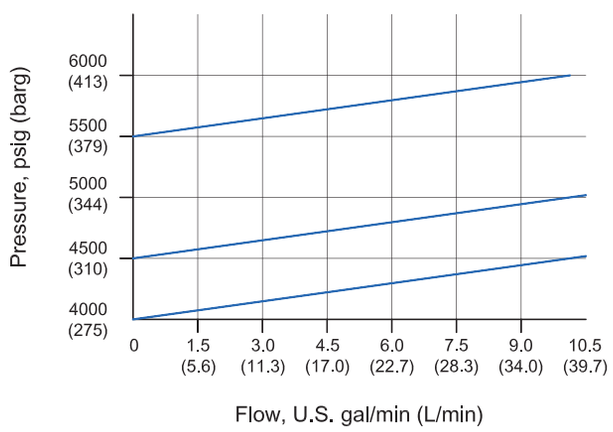

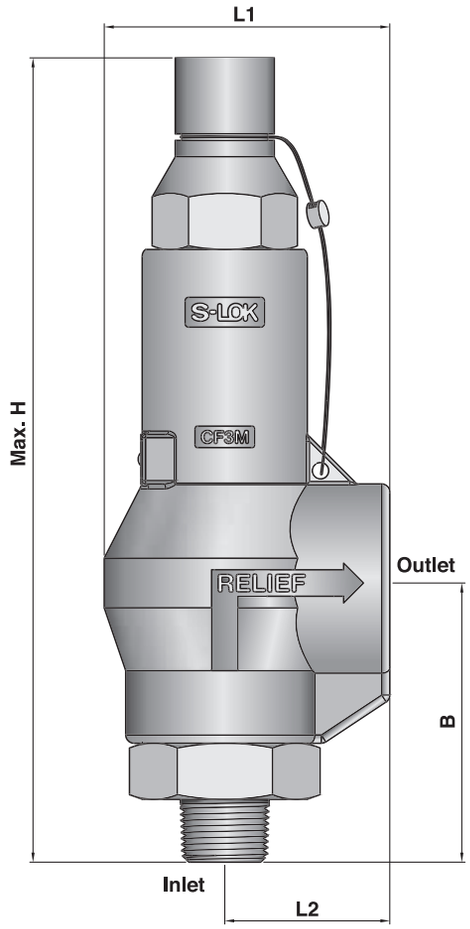

Operation

Usually closed, however it will open when internal pressure reaches the set pressure and re-close when internal pressure falls below the set pressure.

- Valves that were not actuated for a period of time may want initial relier pressure higher than the set pressure.
- Lubricant free valves have higher reseal pressure.
- Resealing pressure is always lower than set pressure.

Options

Seal		
Material	Designator	Temperature Rating °C(°F)
FKM	-	-26 ~ 204(-15 ~ 400)
HNBR	HNBR	-31 ~ 162(-25 ~ 325)
EPDM	EP	-56 ~ 121(-70 ~ 250)

Spring	
Designator	Set Pressure Range psig (barg)
A	200 ~ 750(13.7 ~ 51.7)
B	750 ~ 2500(51.7 ~ 172.3)
C	2500 ~ 5500(172.3 ~ 379.2)

Dimensions

Basic Ordering Number		End Connections		Orifice mm (in.)	Dimensions mm(inch)			
		Inlet	Outlet		H	B	L1	L2
SRV60C	F-8N16N	Female 1/2 NPT	Female 1 NPT	10.0	251.5	84.5	86.5	50.0
	F-12N16N	Female 3/4 NPT						
	MF-8N16N	Male 1/2 NPT						
	MF-12N16N	Male 3/4 NPT						
	MF-16N	Male 1 NPT						

Ordering Information

SRV60C	MF	16N	A	300P	HNBR	CF3M
Valve Series	Connection Type	Connection Size	Spring & Cracking Pressure	Factory Set Pressure	O-ring Material	Body Material

Safe Valve Selection

The selection of a valve for any application to system design must be considered to ensure performance. Valve function, valve rating material compatibility, proper installation, operation and maintenance remain the sole responsibility of the system designer and the user, S-LOK accepts no liability for any selection, installation, operation or maintenance.

SVRV Series Relief Valves

Features

- Max. Working Pressure : 400psi (27.6bar)
- Cracking Pressure Range : 0.5 to 150psi (0.03 to 10.3bar)
- Temperature rating -20 to 400˚F(-28 to 204˚C) with standard Viton.
- Various pressure range and spring.
- Factory preset are available.

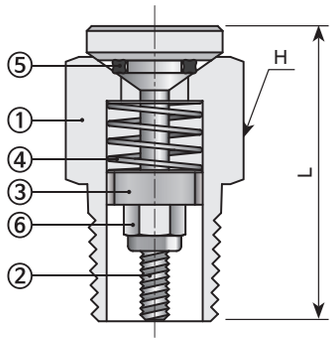

Materials of Construction

Item	Description	Materials	
		SS316	Brass
1	Body	SS316/A276	Brass
2	Stem		
3	Spring Support	SS316	Brass
4	Spring	SS304	
5	Quad Ring	FKM	
6	Lock Nut	Stainless Steel	

Ordering Information and Dimentions

Basic Ordering Number		End Connection (NPT)	Orifice mm(in.)	Dimensions mm (in.)	
				H	L
SVRV	M-2N	1/8"	4.7(0.187)	24.6(0.97)	12.7(1/2)
	M-4N	1/4"	7.0(0.275)	30.5(1.20)	15.87(5/8)
	M-6N	3/8"	8.8(0.345)	31.5(1.24)	19
	M-8N	1/2"	10.4(0.410)	44.5(1.75)	25.4(1)
	M-12N	3/4"	14.5(0.570)	57.2(2.25)	28.5
	M-16N	1"	19.9(0.785)	79.2(3.12)	38.1(1-1/2)

SVRV Series Spring

Designator	Cracking Pressure Range	
	psi	bar
A	0.5 to 2.5	0.03 to 0.17
B	2.6 to 7.5	0.18 to 0.51
C	7.6 to 15	0.52 to 1.03
D	16 to 35	1.10 to 2.41
E	36 to 75	2.48 to 5.17
F	76 to 125	5.24 to 8.61
G	126 to 150	8.68 to 10.34

Pressure Setting Key

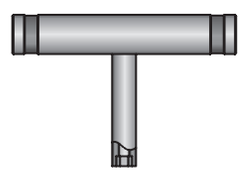

This Pressure Setting Key is to set the cracking pressure by using the hex socket on to the lock nut by turning.

*** Ordering No. : SVRV-4-JIG-S6**

SVRV	M	4N	A	S6
Valve Series	Connection Type	Connection Size	Spring Designator	Body Material

SEV Series Excess Flow Valves

Operation

The spring loaded poppet remains in the open position during normal system operation. Should an downstream pressure drops the poppet rapidly move to the tripped position, and the downstream line is closed or repaired, when the system pressure equalizes through the bleed vent, the spring automatically resets the poppet to the open position.

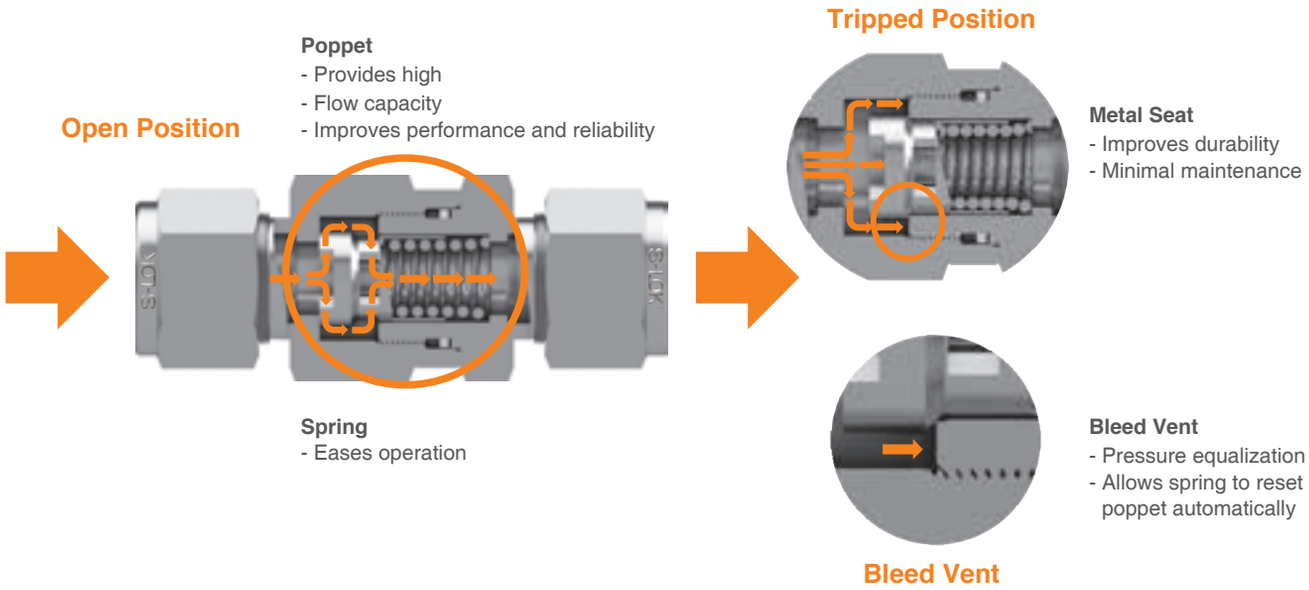

Pressure and Temperature Ratings

Temperature, °F (°C)	Working Pressure, psig(bar)
10 to 100 (-23 to 37)	6000 (413)
200 (93)	5160 (355)
250 (121)	4910 (338)
300 (148)	4660 (321)
400 (204)	4280 (294)

Optional O-Ring Seal Materials

O-Ring Material	Designator	Temperature°F (°C)
FKM	NIL	-10 to 400 (-23 to 204)
NBR	NBR	-4 to 221 (-20 to 105)
EPDM	EP	-50 to 300 (-45 to 148)
FFKM	KA	-10 to 400 (-23 to 204)

Flow Rate at 70°F(20°C)

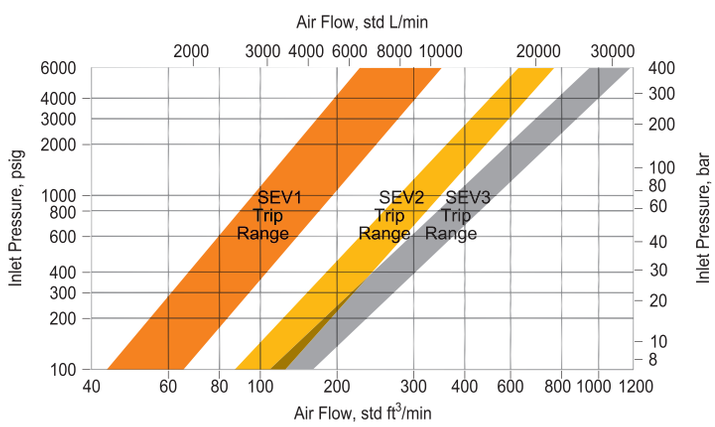

Water

Series	Cv	Trip Range L / min (U.S. gal/min)
SEV1	0.5	14.7 to 21.9 (3.9 to 5.8)
SEV2	1.1	31.0 to 37.8 (8.2 to 10.0)
SEV3	1.1	42.3 to 56.3 (11.2 to 14.9)

Materials of construction

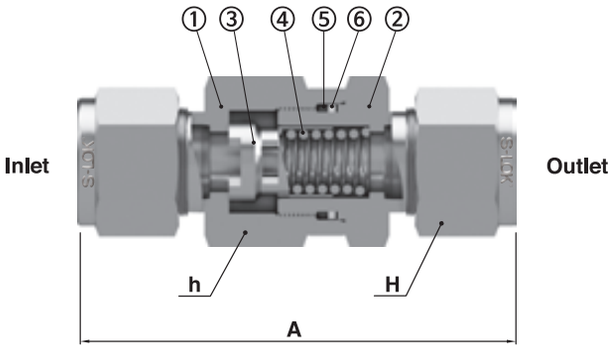

No.	Description	Material	Q`ty
1	Body	SS316 / A276 or A479	1
2	End Connector	SS316 / A276 or A479	1
3	Poppet	SS316 / A276 or A479	1
4	Spring	SS302 / A313	1
5	O-ring	FKM	1
6	Backup ring	PTFE	1

Ordering Information and Dimensions

Basic Ordering Number		End Connection		Dimensions mm (in.)		
		Inlet	Outlet	A	h	H
SEV1	S-4T	1/4″ S-LOK		61.9 (2.44)	17.46 (11/16)	14.28 (9/16)
	S-6M	6mm S-LOK		61.8 (2.43)		14
	M-2N	1/8″ Male NPT		46.6 (1.83)		-
	M-4N	1/4″ Male NPT		46.6 (1.83)		-
	F-2N	1/8″ Female NPT		54.6 (2.15)		-
	F-4N	1/4″ Female NPT		54.6 (2.15)		-
	MF-4N	1/4″ Male NPT	1/4″ Female NPT	54.6 (2.15)		-
SEV2	S-6T	3/8″ S-LOK		70.2 (2.76)	25.4 (1)	17.46 (11/16)
	S-8M	8mm S-LOK		68.9 (2.71)		16
	S-10M	10mm S-LOK		70.5 (2.77)		19
	M-6N	3/8″ Male NPT		61.8 (2.43)		-
	F-6N	3/8″ Female NPT		61.8 (2.43)		-
	MF-6N	3/8″ Male NPT	3/8″ Female NPT	61.8 (2.43)		-
SEV3	S-8T	1/2″ S-LOK		75.7 (2.98)	25.4 (1)	22.22 (7/8)
	S-12M	12mm S-LOK		75.8 (2.98)		22
	M-8N	1/2″ Male NPT		69.8 (2.74)	27	-
	F-8N	1/2″ Female NPT		69.8 (2.74)		-
	MF-8N	1/2″ Male NPT	1/2″ Female NPT	69.8 (2.74)		-

SEV1	S	8T	NB	S6
Valve Series	Connection Type	Connection Size	O-Ring Material	Body Material

- **NB** : NBR
- **VT** : Viton
- **EP** : EPDM
- **KA** : FFKM

- **S6** : SS316 Stainless Steel
- **BS** : Brass

SWCV Series All-Welded Check Valve

Features

- All-welded Design ensures perfect sealing of fluid.
- Compact Design, Simple component structure.
- 316L Stainless Steel body material has improved Corrosion resistance.
- Elgiloy material spring with strong Corrosion resistance for long cycle life.
- Sealing surface provide excellent seal performance.
- Maximum working pressure is up to 3000psig.(206bar)
- All Valves are factory tested with 100% helium.

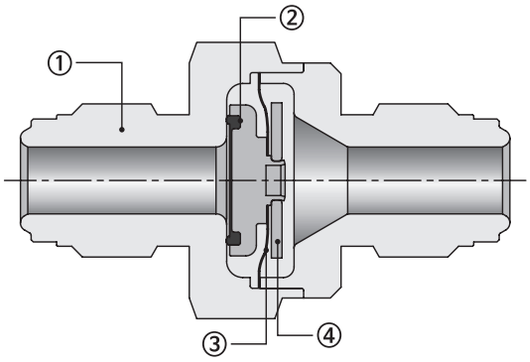

Materials of Construction

No	Component	Materials
1	Body	316L Stainless Steel (Single/Double Melt)
2	Poppet	SS316L / FKM
3	Circular Spring	Elgiloy
4	Poppet Stopper	SS316L

Product Grade

Level	Inner Surface Roughness	
	Ra	Ry
EP	≤ 5 μ inch	≤ 0.7 μm
BA	≤ 10 μ inch	≤ 3.0 μm
AP	≤ 100 μ inch	≤ 25 μm

Cleaning and Packaging

- All parts are free of emulsion composition and residuesinvolved in the machining process.
- Valves are assembled, inspected, tested and packaged in a CLASS 10-100 cleanroom.
- Double bag packaging is standard, and the inner bag contains ultra pure nitrogen.

Specifications

Size in.	Max. Working Pressure Mpa(psig)	Nominal Reseal Back Pressure Kpa(psig)	Nominal Cracking Pressure Kpa(psig)	Temperature Rating °C (°F)	Flow Coeffcient (CV)	Inboard Helium Leak Rates	Particle Inspection(EP) (0.1μm and Larger)
1/4	20.6 (3000)	27.6(4)	13.8(2)	-10 ~ 80 (-14 ~ 176)	0.55	≤ $1x10^{-9}$ arm cc/sec	No count pressure:60~80psi N2 gas
1/2					0.7		

Ordering Information and Dimensions

SWCV	MG	8	EP	S6LS
Valve Model	Connection Type	Connection Size	Product Grade	Body Material
• **SWCV** : All-Welded Check Valves	• **MG** : Male Metal Face Seal • **BW** : Butt Weld	• **4** : 1/4” • **8** : 1/2”	• **BA** : BA • **EP** : EP	• **S6LS** : SS316L Single Melt • **S6LV** : SS316L Double Melt

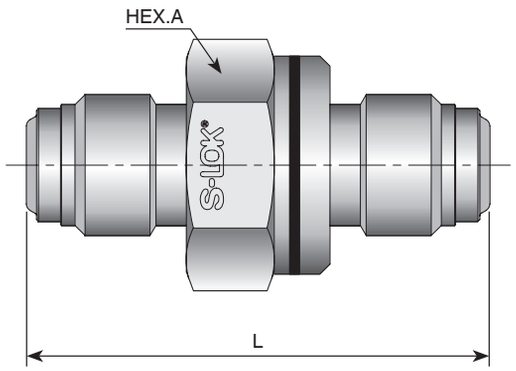

Male MFS

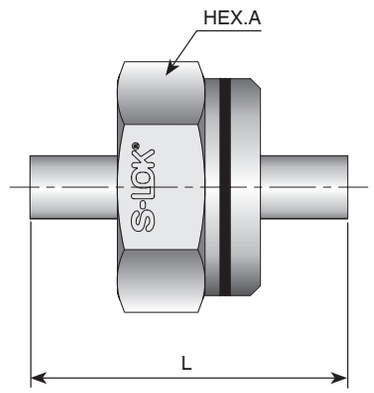

Tube Butt Weld

Dimensions

Basic Ordering Number	End Connection	Dimensions, mm	
		L	A
SWCV-MG-4	Male MFS 1/4”	45.8	22.2
SWCV-MG-8	Male MFS 1/2”	52.3	27.0
SWCV-BW-4	Tube Butt Weld 1/4”	31.5	22.2
SWCV-BW-8	Tube Butt Weld 1/2”		

Manifold, Gauge & Rising Plug Valves

The best partner for value creation
We support the innovations of customers

04

Catalogue No. S-LOK Mar.2024

SM Series Manifold Valves

Features

- Non-rotating stem tip at closure for long-life and leak-tight shutoff. Blunt Vee tip
- Exclusive 2-piece, chevron PTFE packing design provides far improved sealing integrity. Graphite packing optional.
- Isolated Threads : Packing located below the threads prevents media contamination and thread lubricant washout.
- Packing under the stem threads is to isolate the threads from the system fluid and lubricant washout.
- Packing bolt permits stem packing adjustment.

Pressure-Temperature Ratings

Body Material	Packing Material	Temp. Range	Pressure Rating @ 100°F (37°C)	Pressure Rating @ Max. Temp.
Stainless Steel	PTFE	-65 ~ 450˚F (-54 ~ 232˚C)	413bar(6000 psig)	4130psig @ 450˚F (285bar @ 232˚C)
	Graphite	-65 ~ 1200˚F (-54 ~ 648˚C) (1)		1715psig @ 1,200˚F (118bar @ 648˚C)
Carbon Steel	PTFE	-20 ~ 350˚F (-29 ~ 176˚C)	413bar (6000 psig)	5230psig @ 350˚F (360bar @ 176˚C)
	Graphite	-20 ~ 350˚F (-29 ~ 176˚C)		

(1) Graphite packing rating is limited to 537˚C(1,000˚F) with flange end connection.
In air, Graphite rating is limited 523˚C (975˚F), in steam it can go up to the maximum temperature of 648˚C (1200˚F).
-28 to 204˚C (-18 to 399˚F) with optional fluorocarbon FKM flange seal.

2-Valve	3-Valve	5-Valve
For isolating, calibrating and draining pressure gauges and transmitters.	For measuring flow or leveling, using a differential pressure transmitter.	For measuring flow or leveling, using a differential pressure transmitter. Gauge with bleeding, calibration and test function.
In operation, the block valve is normally open when the bleed valve is closed. To remove the instrument, close the block valve first and open the bleed valve to relieve pressure at the upstream of the block valve. For calibration, connecting a calibration gauge to the bleed port allows checking the calibration of the instrument without removing it from the installation.	In operation, both block valves are open while the equalizer valve is closed to read a differential pressure to the pressure gauge or transmitter. To zero the instrument, close the block valve first then open the equalizer valve which will adjust the instrument to zero. To remove the instrument, close block valves first, then unscrew the bleeding plug to relieve pressure between the manifold and instrument.	In operation, both block valves are open while the equalizer and bleed valves are closed to read a differential pressure to pressure gauge or transmitter. To zero the instrument, close block valves and bleed valve, and open the equalizer valve which will adjust the instrument to zero. For calibration, connect the bleed port to a pressure gauge to check the calibration of the instrument.

Material of Construction

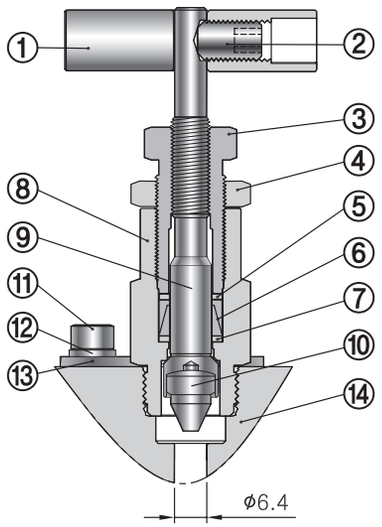

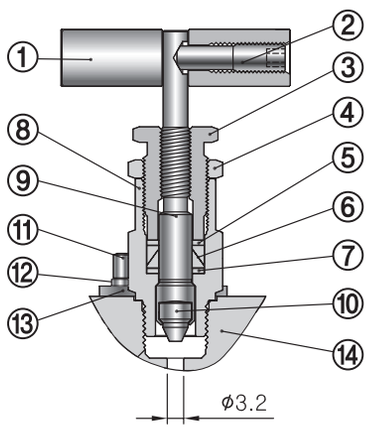

No	Component	Body Material	
		Stainless Steel	Carbon Steel
		Bonnet Valve Material	
1	Handle	Stainless Steel	Aluminum (Black Anodized)
2	Set Screw	Stainless Steel	
3	Packing Bolt	SS316 / A276 or A479	A108
4	Lock Nut	SS316 / A276	
5	Upper Gland	SS316 / A276 or A479	
6	Packing	Chevron PTFE (Optional Graphite)	
7	Lower Gland	SS316 / A276 or A479	
8	Bonnet	SS316 / A276 or A479	
9	Stem	SS316 / A276 or A479	
10	Stem Tip	SS630 / A564	
11	Bolt	Stainless Steel	
12	Spring Washer	Stainless Steel	
13	Lock Plate	Stainless Steel	Carbon Steel
14	Body	SS316 / A276 or A479	A108 or A105 (Yellow Zinc Galvanized)

- Flange Seals : PTFE / D1710, Graphite and Fluorocarbon FKM O-ring
- Flange Bolts : ASTM A193

* Lubricant : Fluorinated base with PTFE and tungsten disulfide (Hydrocarbon based)

Sour Gas Service

- For the use of valves on sour gas, materials for wetted components are selected in accordance with NACE standard as MR0175, latest revision.

Testing

- Each instrument manifold is tested with nitrogen at 1,000 psig (69 bar) to max. leak rate of 0.1 (SSCM).
- Hydrostatic shell test is performed at 1.5 times the working pressure as an option.
- Other tests are available upon request.

Ordering Information

Manifolds Type		Ordering Number		End Connection		Orifice mm (inch)	Weight kg (lb)
				Process	Instrument		
Remote Mount	Block	SM2VP	MF-8N	1/2″ Male NPT (ASME B 1.20.1)	1/2″ Female NPT (ASME B 1.20.1)	3.2 (.126)	1.2 (2.6)
			F-8N	1/2″ Female NPT (ASME B 1.20.1)			1.2 (2.6)
		SM2V-F-8N		1/2″ Female NPT (ASME B 1.20.1)		3.2 (.126)	0.8 (1.8)
		SM3V-F-8N				6.4 (.251)	2.0 (4.4)
		SM5V-F-8N					2.2 (4.9)
	Block (Short Type)	SM2VPS	MF-8N	1/2″ Male NPT (ASME B 1.20.1)	1/2″ Female NPT (ASME B 1.20.1)	3.2 (.126)	0.9 (2.0)
			F-8N	1/2″ Female NPT (ASME B 1.20.1)			0.9 (2.0)
Direct Mount	Single Flange	SM2V1-F-8N		1/2″ Female NPT (ASME B 1.20.1)	Flange (MSS-SP-99)	3.2 (.126)	1.0 (2.2)
		SM3V1-F-8N				6.4 (.251)	2.2 (4.9)
		SM5V1-F-8N					2.7 (6.0)
	Double Flange	SM3V2		Flange (MSS-SP-99)		6.4 (.251)	2.5 (5.5)
		SM5V2					2.7 (6.0)
	Single Flange (With Slotted Feature)	SM2V1S-F-8N		1/2″ Female NPT (ASME B 1.20.1)	Flange (MSS-SP-99)	3.2 (.126)	1.0 (2.2)
		SM3V1S-F-8N				6.4 (.251)	2.2 (4.9)
		SM5V1S-F-8N					2.7 (6.0)
	Double Flange (With Slotted Feature)	SM3V2S		Flange (MSS-SP-99)		6.4 (.251)	2.5 (5.5)
		SM5V2S					2.7 (6.0)
	Vertical	SM2VD-F-8N		1/2″ Female NPT (ASME B 1.20.1)	Flange (MSS-SP-99)	3.2 (.126)	1.6 (3.5)
		SM3VD-F-8N				6.4 (.251)	1.7 (3.8)
		SM5VD-F-8N					3.3 (7.3)
		SM5VDS	F-8N				2.7 (6.0)
			F-8N-RT				

How to Order Manifolds with Options

- To order the optional Graphite packing, add-GF to the ordering number. SM3V-F-8N-GF-S6
- To order sour gas service valve, add-SG to the ordering number. SM3V-F-8N-GF-SG-S6
- To complete the ordering number, select valve body material designator -S6 for S316, -CS for carbon steel,
  Example: SM3V-F-8N-S6

Packing adjustment : Extreme or rapid temperature cycle may require packing adjustment to maintain a leak-free system. Tightening the Locknut on the bonnet is for the packing adjustment.

Remote Mount

SM2VP-MF-8N / SM2VPS-MF-8N

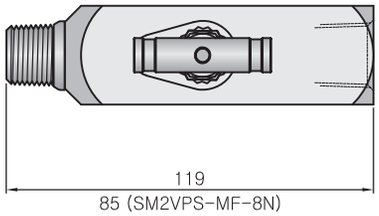

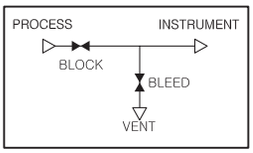

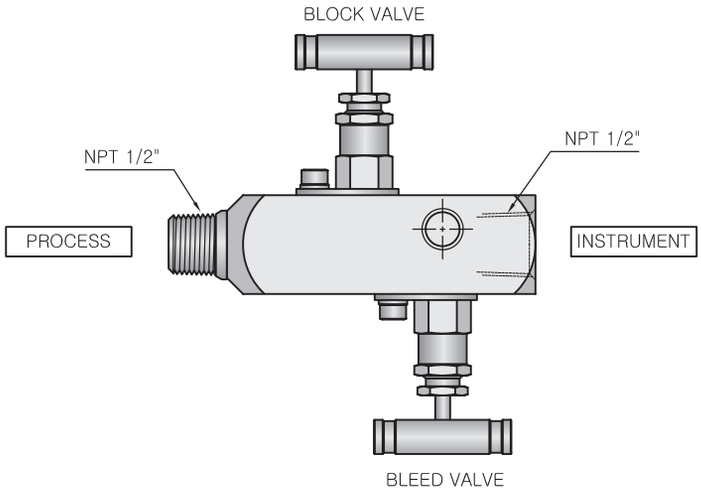

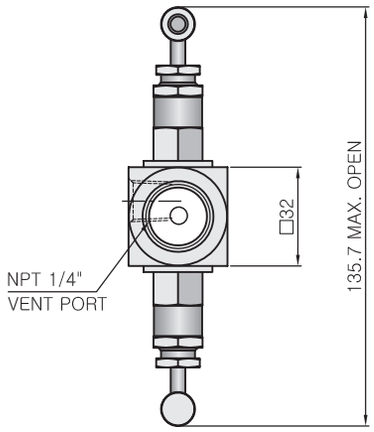

SM2VP-F-8N / SM2VPS-F-8N

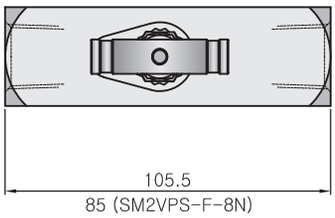

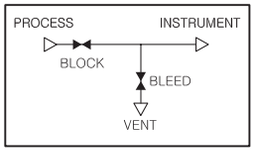

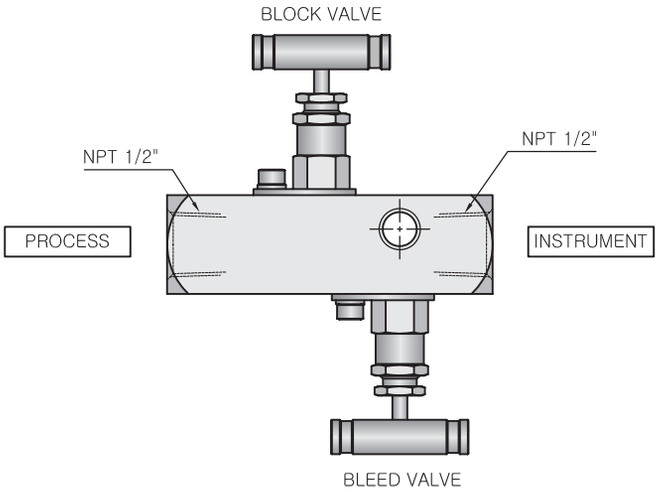

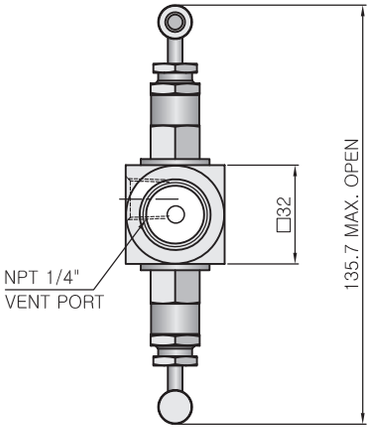

Remote Mount

SM2V-F-8N

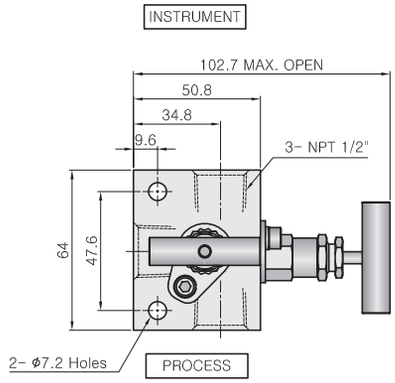

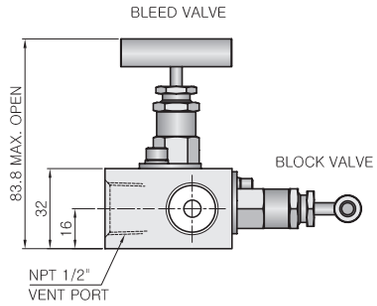

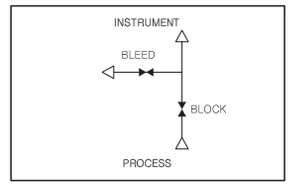

SM3V-F-8N

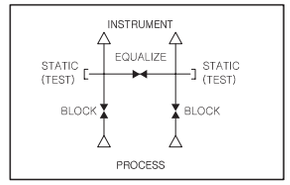

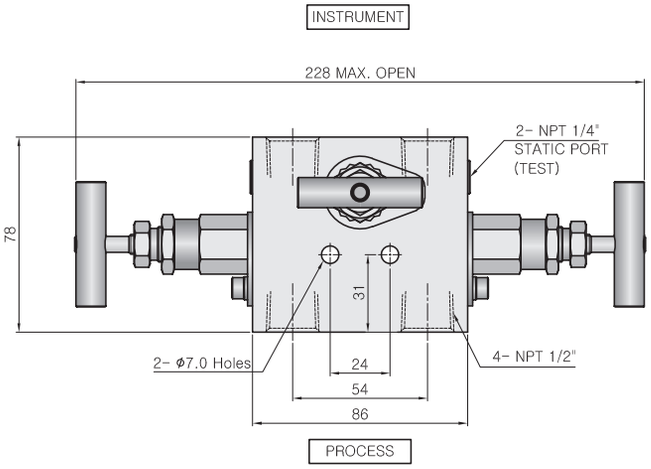

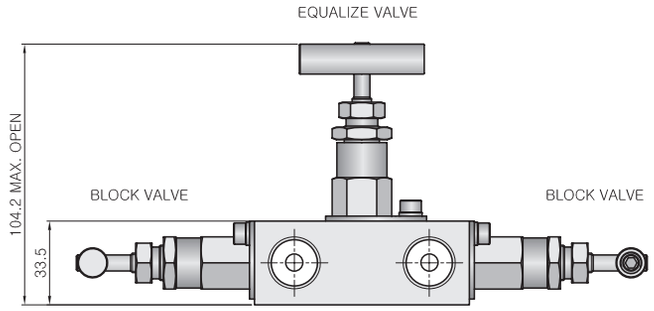

SM5V-F-8N

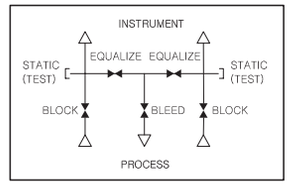

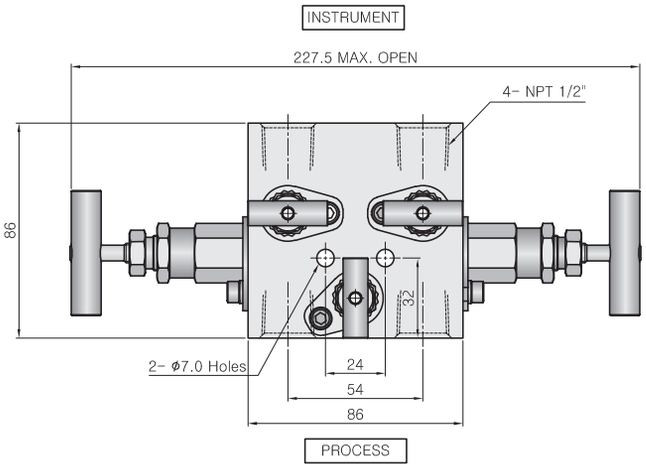

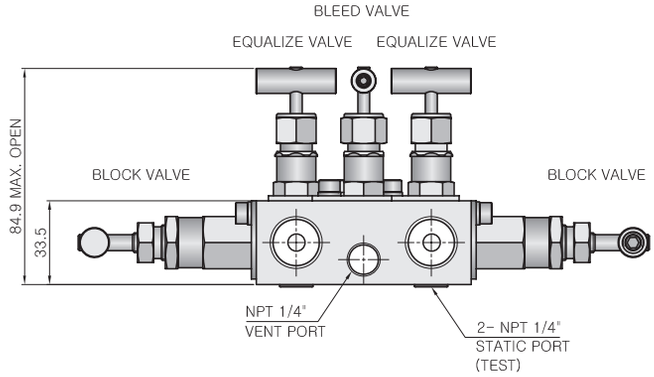

Direct Mount (Single Flange)

SM2V1-F-8N / SM2V1S-F-8N

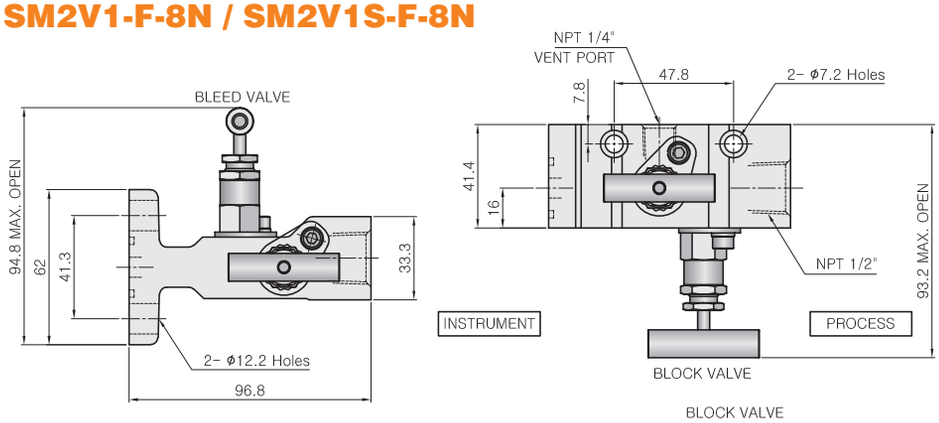

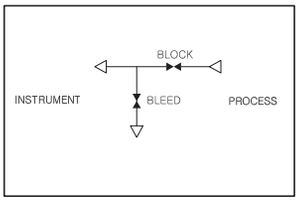

SM3V1-F-8N / SM3V1S-F-8N

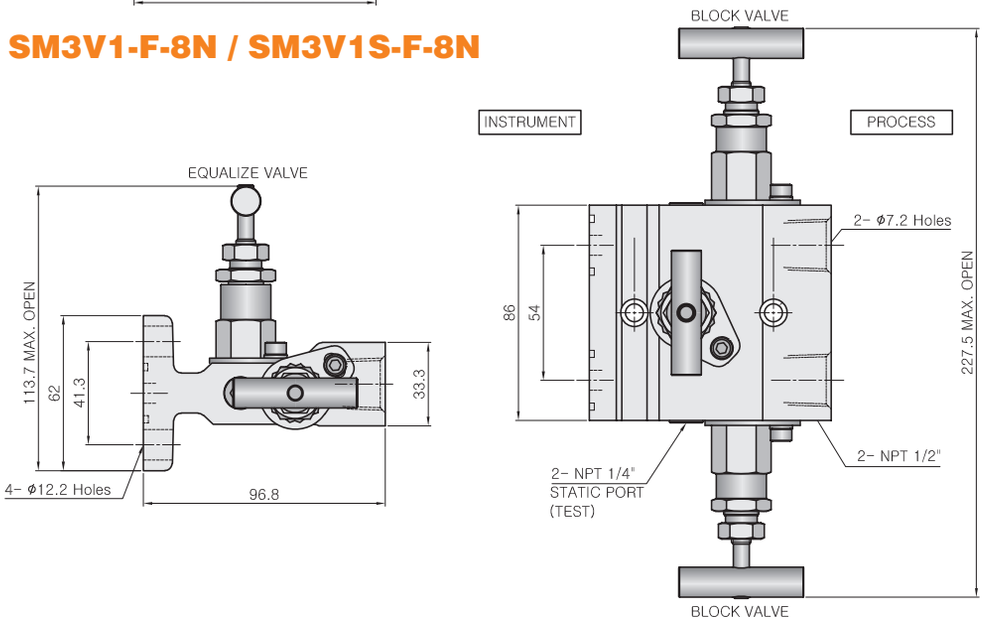

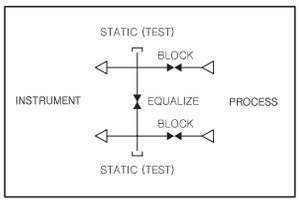

SM*VS Flange Bolt Hole

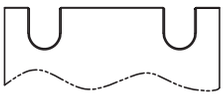

SM5V1-F-8N / SM5V1S-F-8N

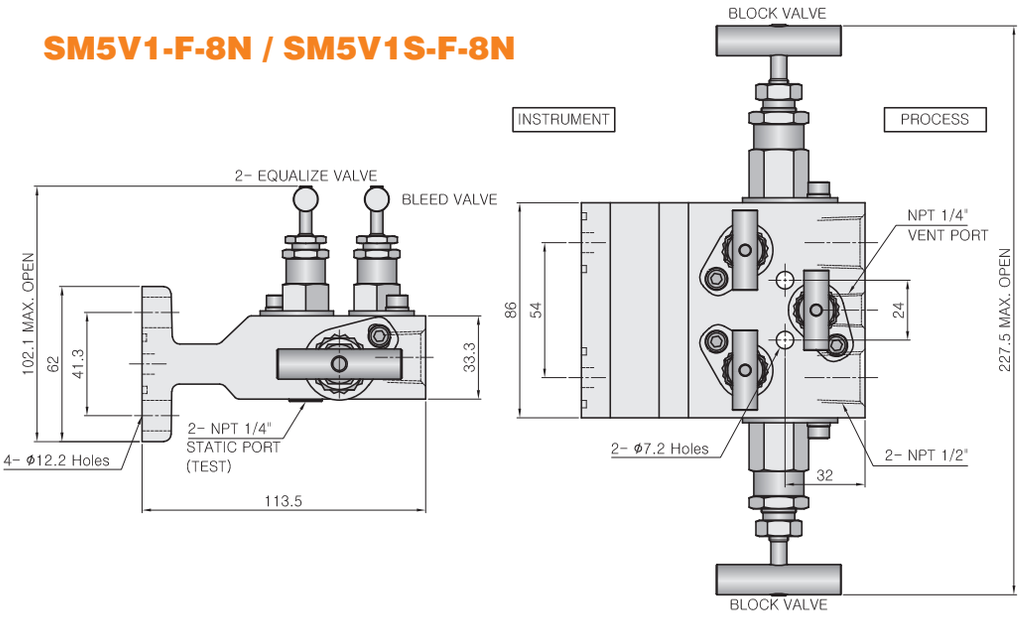

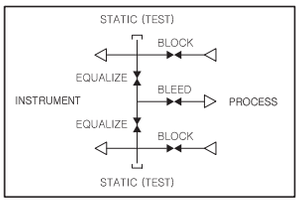

Direct Mount (Double Flange)

SM3V2 / SM3V2S

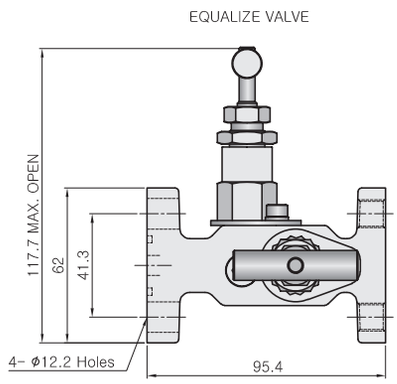

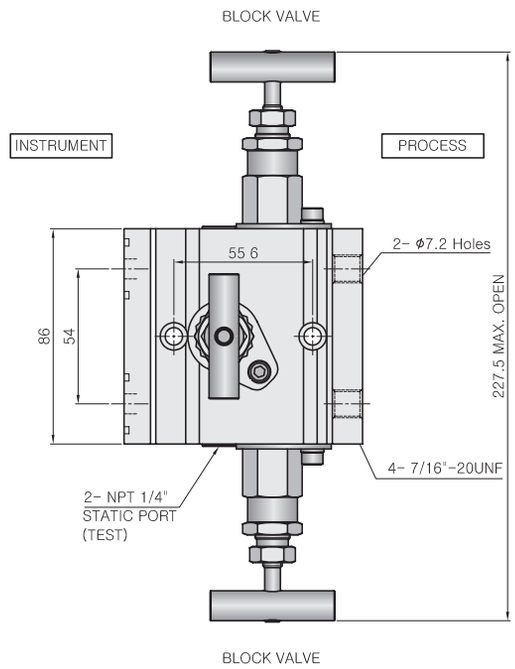

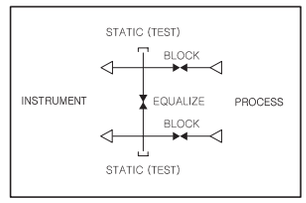

SM*VS Flange Bolt Hole

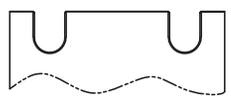

SM5V2S

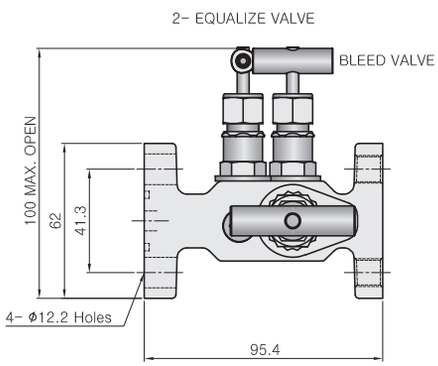

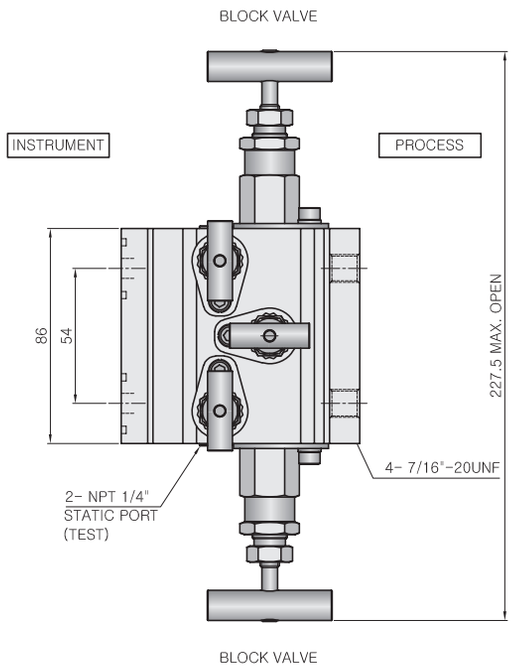

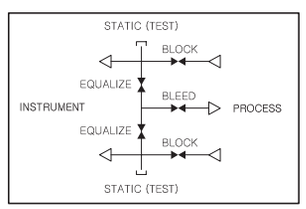

Direct Mount (Vertical)

SM2VD-F-8N

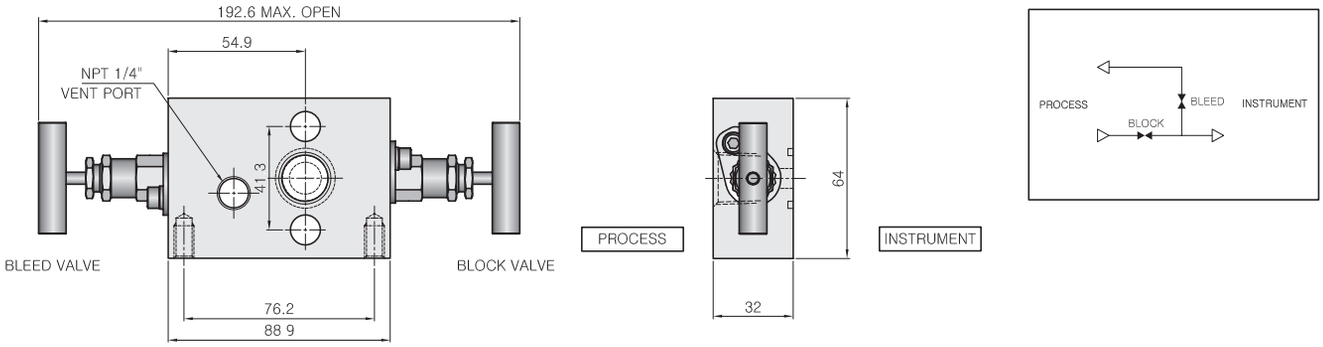

SM3VD-F-8N

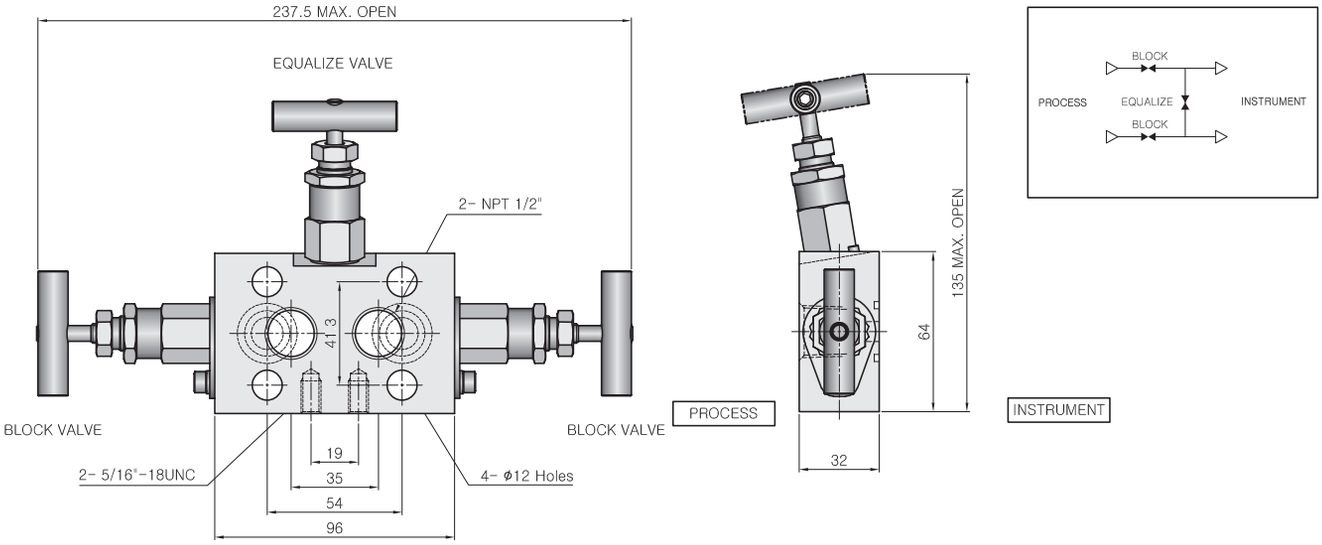

SM5VD-F-8N

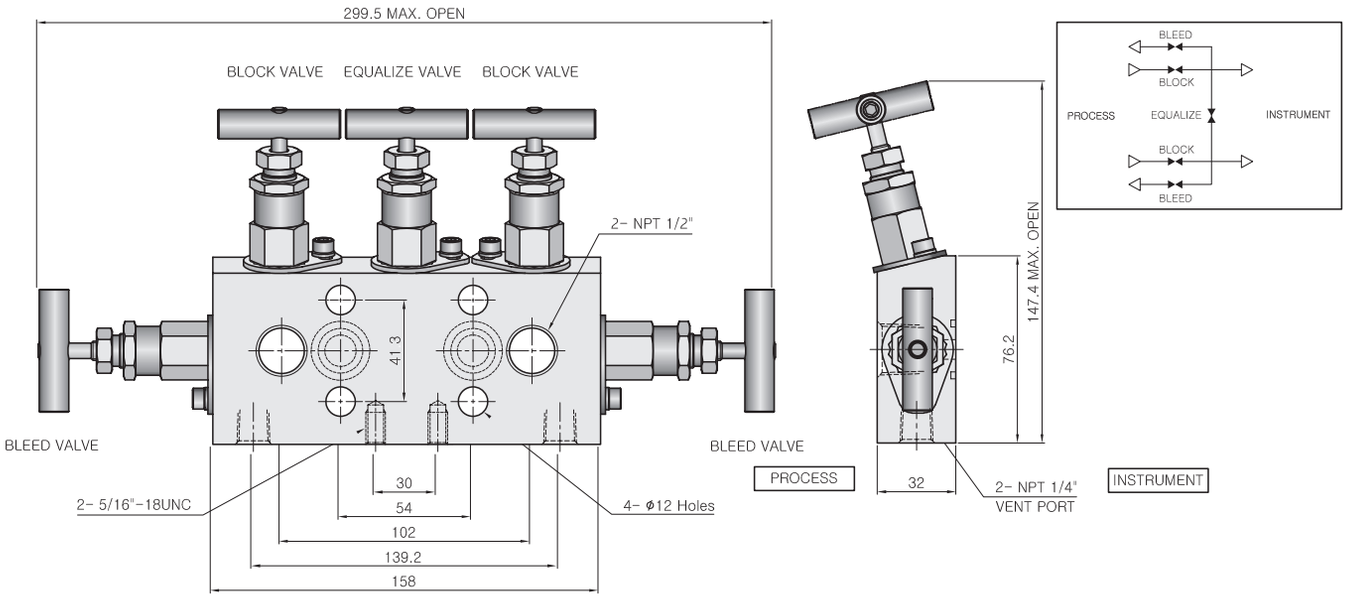

Direct Mount (Vertical)

SM5VDS-F-8N

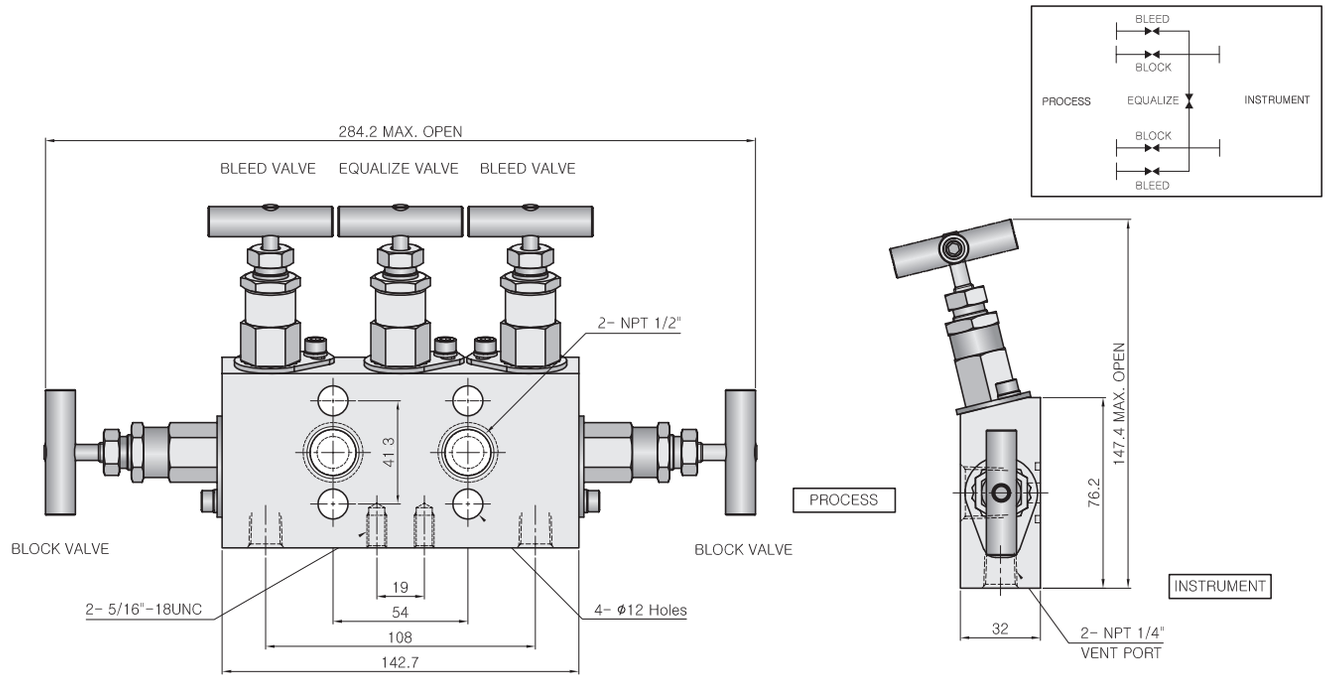

SM5VDS-F-8N-RT

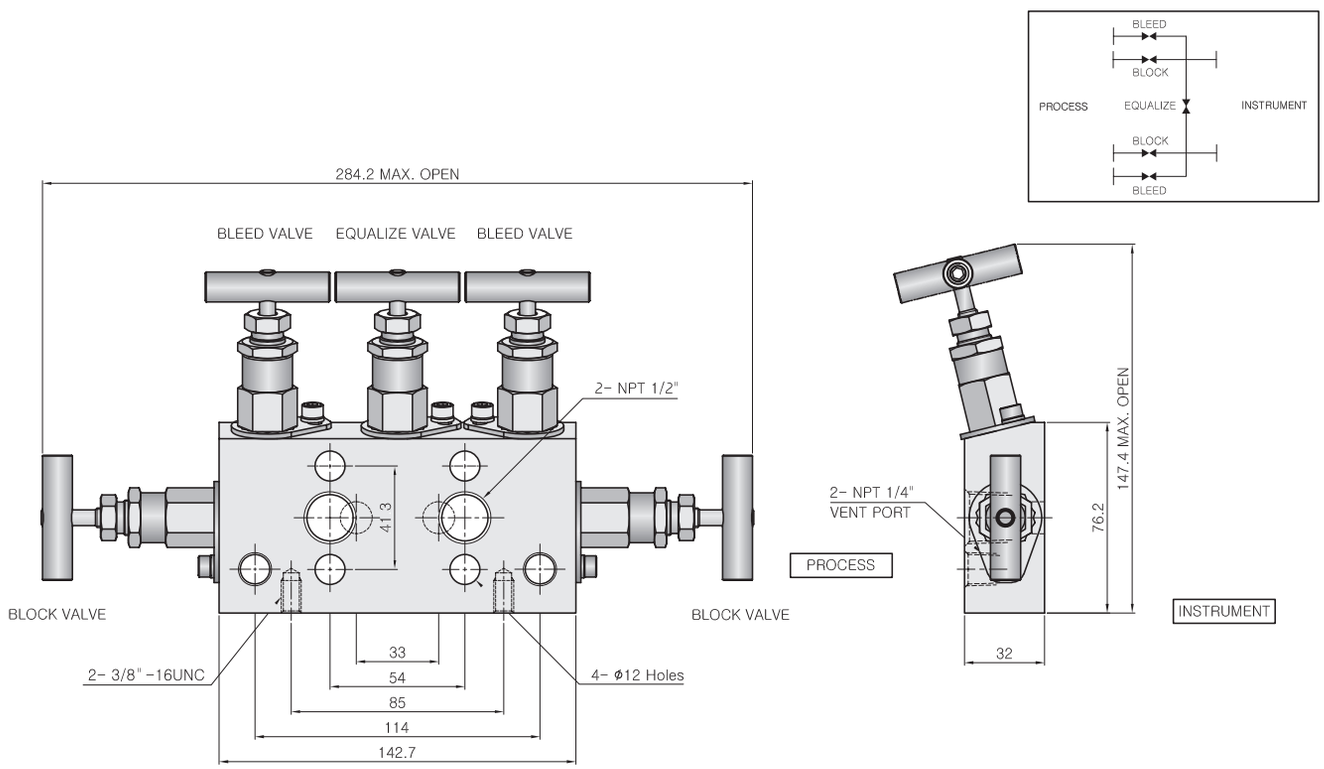

Accessories

Flange Bolts

For special mounting applications optional long and short bolts are available.

Ordering Number	Thread Size	Hex Size	Length (mm)	
BLT-04UL45	7/16-20UN	15.87 (5/8)	45.0	Standard
BLT-04UL58	7/16-20UN	15.87 (5/8)	58.0	Long
BLT-04UL25	7/16-20UN	15.87 (5/8)	25.0	Short

Flange Seals

Flanges seals are available in standard PTFE, optional Graphite and fluorocarbon FKM (Viton) O-ring for system compatibility.

Ordering Number	Seal Material	Temperature Range
XMV-FSEAL-TE	PTFE	-65 ~ 250˚F (-53 ~ 121˚C)
XMV-FSEAL-GF	Graphite	-65 ~ 1000˚F (-53 ~ 537˚C)
XMV-FSEAL-VT	FKM	-20 ~ 450˚F (-28 ~ 232˚C)

Oval Flange / Eccentric & Concentric Pipe Nipple

Oval flanges used to connect flange to flange manifold.1/2″ Female NPT (Standard)
Concentric & Eccentric pipe nipples have 1/2″ Male NPT and 76mm length.

Ordering Number	Thread Size	Ordering Number	Thread Size
SM-CO-FL-F8N	1/2”FNPT	SM-CO-PN-M8N	1/2″ MNPT
SM-EC-FL-F8N	1/2”FNPT	SM-EC-PN-M8N	1/2″ MNPT

Calibration Fittings

Calibration fittings connect directly to the bleed port of differential pressure transmitter.

Ordering Number	Thread Size	S-LOK Tube O.D	Length (mm)
SCAB-4-S-S6	1/4-28UN	1/4	42.9
SCAB-4-L-S6	5/16-24UN	1/4	58.9

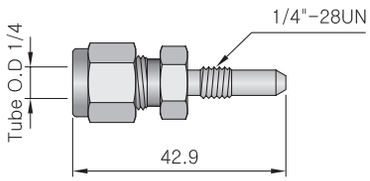

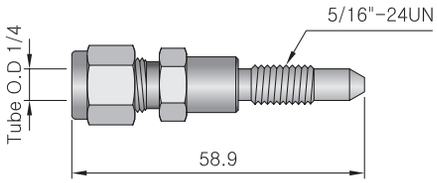

Mounting Bracket Kits

Bracket kit containing bracket, U-bolt, hex nut and washer allows horizontal and vertical manifold mounting.

Ordering Number	Material
SM*V-MKIT-S4	SS304
SM*V-MKIT-CS	SS400

SGV & SGRV Series Gauge & Gauge Root Valves

Features

- The standard configuration has a male or female inlet and 1/2″ female NPT outlet (gauge) port.
- Compact design requires minimum space for operation and installation.
- Locking device handle is optional.
- SGRV has extended 4.0 inch body for pipe insulation.
- Valve orifice standard are 6.4 mm (0.25in)

SGV-MF-8N

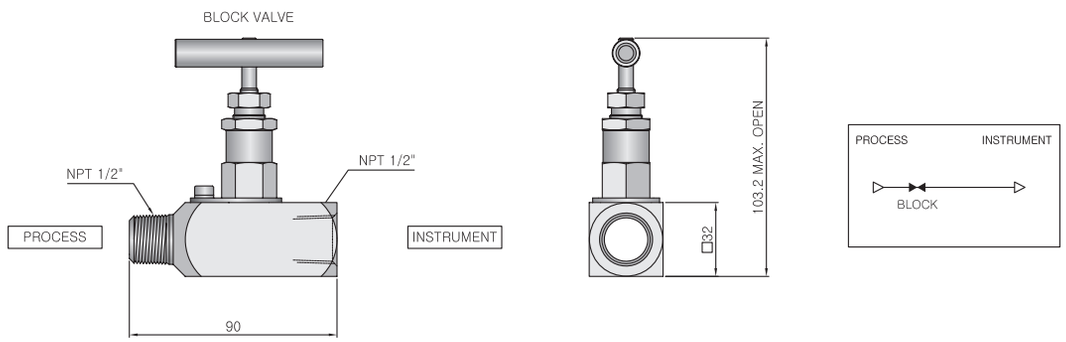

SGRV-MF-8N / SGRLV-MF-8N

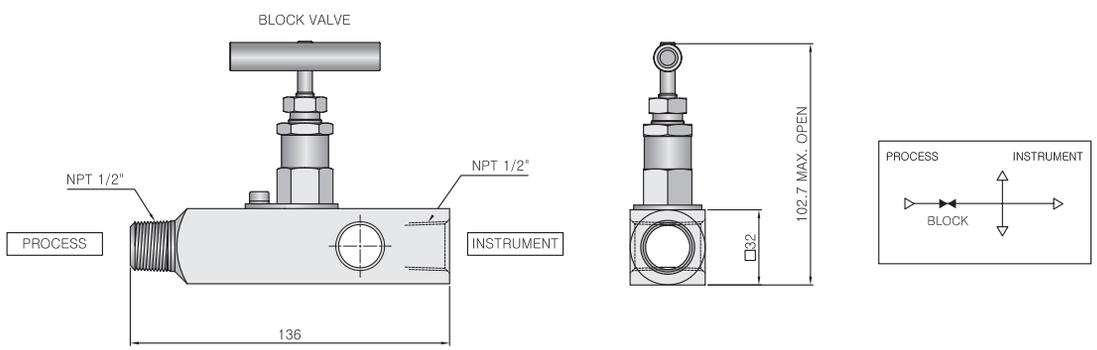

Ordering Number		End Connection		Orifice Mm (inch)	Weight Kg (lb)
		Process	Instrument		
SGV	MF-4N	1/4″ Male NPT	1/4″ Female NPT	4.5 (0.18)	0.6 (1.3)
	MF-8N	1/2″ Male NPT	1/2″ Female NPT	6.4 (0.25)	0.6 (1.3)
SGRV	MF-8N	1/2″ Male NPT	1/2″ Female NPT	6.4 (0.25)	0.9 (2.0)
	MF-12N8N	3/4″ Male NPT	1/2″ Female NPT	6.4 (0.25)	1.0 (2.2)
SGRLV	MF-8N	1/2″ Male NPT	1/2″ Female NPT	6.4 (0.25)	1.6 (3.5)
	MF-12N8N	3/4″ Male NPT	1/2″ Female NPT	6.4 (0.25)	1.6 (3.5)

* SGRLV Length : 184mm

SRPV Series Rising Plug Valves

Features

- Bi-directional flow control.
- Replaceable seat design: Acetal seat standard, optional PEEK and PFA are available.
- Non-rotating Stem Tip are composed for positive sealing and maximize soft seat life.
- Internal bonnet O-ring protects threads from external contamination.
- Isolated threads' location above the sealing rings prevent media contamination and thread lubricant washout.

Material of Construction

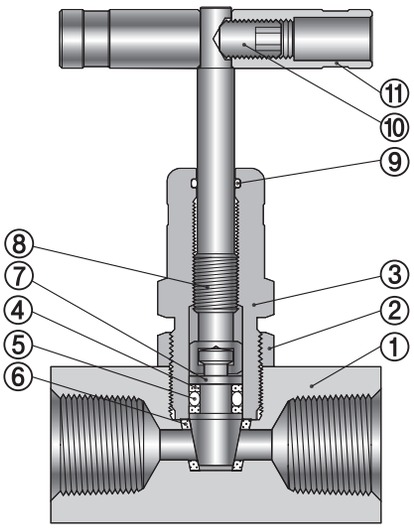

No	Component	Material
1	Body	SS316 / A276 or A479
2	Locking Nut	SS316 / A276 or A479
3	Bonnet	SS316 / A276 or A479
4	Backup Ring	PTFE
5	O-ring	FKM
6	Seat	ACETAL (Optional PEEK, PFA)
7	Stem Tip	SS316 / A276 or A479
8	Stem Shank	SS316 / A276 or A479
9	O-ring	FKM
10	Handle	Stainless Steel
11	Set Screw	Stainless Steel

Pressure-Temperature Ratings

Ratings are based on standard stem tip of FKM O-ring and PTFE backup rings.

Body Material	SS316		
Seat Material	ACETAL	PEEK	PFA
Temperature, ˚F(°C)	Working Pressure, psig (bar)		
-20 (-28) to 100 (37)	6000 (413)	6000 (413)	750 (51.6)
200 (93)	2650 (182)	3000 (206)	625 (43.0)
250 (121)	1000 (68.9)	1600 (110)	450 (31.0)
300 (148)	-	1300 (89.5)	300 (20.6)
350 (176)	-	1200 (82.6)	200 (13.7)
400 (204)	-	1000 (68.9)	100 (6.8)

Valve with ACETAL seat : For water and steam application, standard valve with ACETAL seat is not recommended for application of greater than 200˚F(93˚C) temperature.

Ordering Information and Dimensions

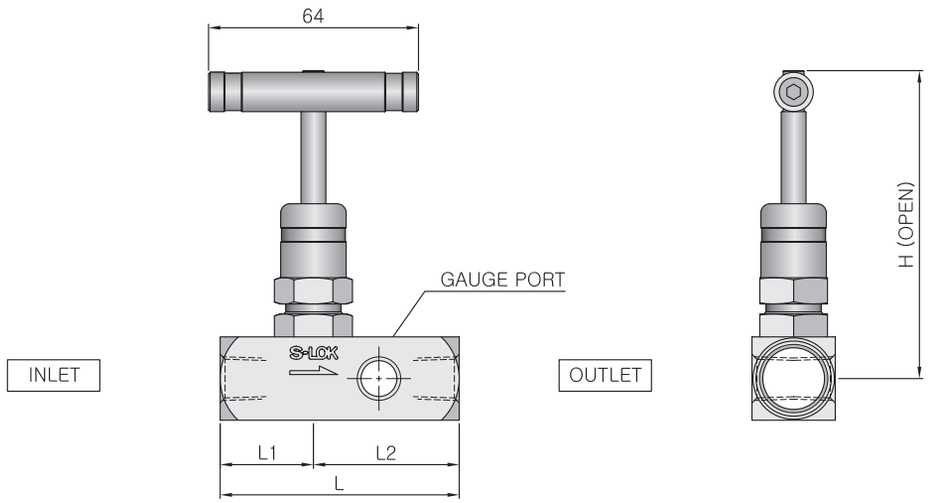

Ordering Number		End Connections		Orifice mm(in.)	Cv	Dimensions, mm(in.)			
		Inlet	Outlet			L	L_1	L_2	H
SRPV1	F-4N	1/4″ Female NPT		4.8 (0.187)	0.63	56.9 (2.24)	28.4 (1.12)	28.4 (1.12)	95.8 (3.77)
	MF-4N	1/4″ Male NPT	1/4″ Female NPT			73.4 (2.90)	45.2 (1.78)		
	MF-8N4N	1/2″ Male NPT	1/4″ Female NPT			76.5 (3.01)	48.0 (1.89)		
SRPV1-G4	F-4N	1/4″ Female NPT				72.9 (2.87)	28.4 (1.12)	44.4 (1.75)	
	MF-8N4N	1/2″ Male NPT	1/4″ Female NPT			124 (4.87)	79.2 (3.12)		
SRPV2	F-8N	1/2″ Female NPT		6.2 (0.24)	1.8	67.6 (2.66)	33.8 (1.33)	33.8 (1.33)	97.3 (3.83)
	MF-8N	1/2″ Male NPT	1/2″ Female NPT			88.6 (3.49)	54.9 (2.16)		
	MF-12N8N	3/4″ Male NPT	1/2″ Female NPT						
SRPV2-G8	F-8N	1/2″ Female NPT				90.9 (3.58)	33.8 (1.33)	57.2 (2.25)	
	MF-8N	1/2″ Male NPT	1/2″ Female NPT			142 (5.58)	84.6 (3.33)		
	MF-12N8N	3/4″ Male NPT	1/2″ Female NPT						

- SRPV1-G4 gauge port : 1/4″ Female NPT, SRPV2-G8 gauge port : 1/2″ Female NPT
- All dimensions shown are for reference only and are subjected to change.

Testing

- Each Rising plug valve is tested with nitrogen@1,000 psig (69 bar) to max. leak rate of 0.1 (SSCM).
- Hydrostatic shell test is performed at 1.5 times the working pressure as an option.
- Other tests are available upon request.

Integral Block & Bleed Valves

The best partner for value creation
We support the innovations of customers

05

Catalogue No. S-LOK Mar.2024

SSB & SDB Series Block & Bleed Valves

S-LOK Block & Bleed Valves has the ultimate solutions for a compact range one-piece forged body primary isolation Valves, featuring a choice of end connections, body styles and valve technology.

Product Information

Design Standards

- ASME B 16.34 Valves-Flanged, Threaded, and Welding End.
- ASME B 16.5 Pipe Flanges and Flanged Fittings.
- ASME B 1.20.1 Pipe Threads, General Purpose.
- API 607 / BS 6755 part 2 Fire test for Quarter-turn Valves.
- ISO 15848-1 / 15848-2 Measurement, test and qualification procedures for fugitive emissions.
- NACE MR 0175 / ISO 15156 General principles for selection of cracking-resistant materials.

Applications

- Double block and bleed instrument isolation.
- Process piping isolation point.
- Chemical injection systems.
- Sampling systems.
- Instrument Vents & drain.
- Piping / instrument interface.
- Direct mounting of instruments.

Installation Advantages

- Compact design.
- Provided weight & space savings.
- Reduced leakage points.
- Reduced vibrational stresses.
- Supporting bracket are not required.
- Reduced installation & maintenance costs.

Markets

- Offshore Oil & Gas
- Chemical Plant
- Petrochemical
- Power Generation
- LNG Carrier

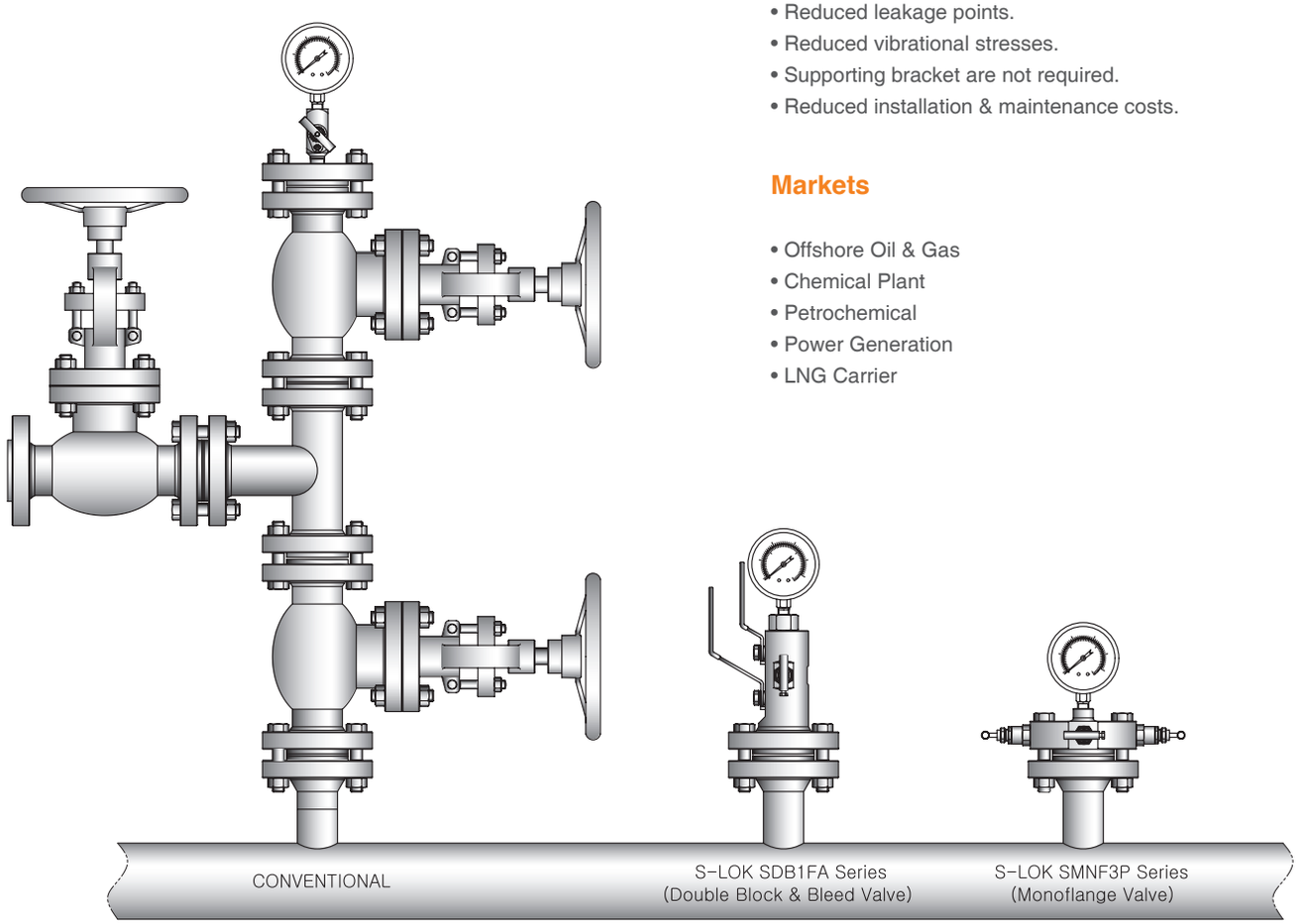

Ball Valve Specification

Design Standards

- ASME B 16.5 flanged connections 1/2″ to 2″ sizes.
- Class150 rated to Class2500 rated.
- API flanged connections sizes to 2-1/16″
- 1/2″ ~ 1″ NPT threaded female outlet / vent to ASME B1.20.1.
- Material thickness to ASME B16.34.
- Bolted Body construction (Inlet or Outlet) is options.
- Pressure test is in accordance with API 598.
- Fire safe designed to API 607, BS6755 Part2.

Features

- Blowout proof stem.
- Fully encapsulated allow high working pressure.
- Super finished ball for low operating torque and long life.
- End connector threads are fully isolated from process by primary and secondary static seals.
- Color coded and function identified handles.
- Bore size available 10mm (3/8″), ~ 50mm (2″).
- Ball seats choice of materials : PTFE(virgin or filled), PEEK.
- Anti-static design as standard.
- Pressure rating up to 10,000psig (690bar).
- Temperature rating -70.6°F to 482°F (-57°C to 250°C).
- Optional : NACE Compliance, Locking Device Handle.

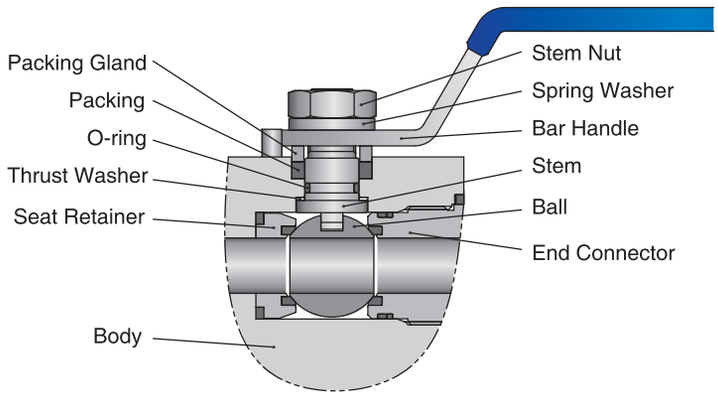

Materials of Construction

Description	Material Grade			
	Stainless Steel	Carbon Steel	Lower Temp. Carbon Steel	Duplex Stainless Steel
Body, Connector	A182 F316	A105	A350 LF2	A182 F51
Ball	SS316 / A479 or A276			UNS S31803
Stem	SS316 / A479 or A276			UNS S31803
Seat	PTFE / Reinforced PTFE / PEEK			
Thrust Washer	PEEK			
O-Ring	NBR / FKM (VITON)			
Packing, Seal	GRAPHITE / PTFE			
Bolt	A193 B8M	A193 B7	A320 L7	A453-660
Nut	A194 8M	A194 2H	A194 7	A453-660
All other part	Stainless steel			

NOTE

Stainless steel is standard body material but such a Monel, Super Duplex, Hastelloy, Inconel and other special material are available upon request.

Needle Valve Specification

Features

- Rolled stem threads prevent galling. Stem threads are completely isolated from the process.
- Stem packing with Graphite or PTFE rings for bubble-tight seal.
- Stem tip construction : non-rotating self-centering, Anti-galling tip positive bubble-tight and field interchangeable rip.
- Backseat design provides secondary stem sealing & prevents stem blowout.
- Packing bolt allows easy access to adjust the packing gland.
- Robust bar handle is standard.
- Color coded and function label for easy identification.
- Orifice size 0.2″(5mm).
- Pressure rating up to 10,000psig(690bar).
- Temperature rating -70.6˚F to 1,022˚F (-57˚C to 550˚C)
- Anti-Temper bonnets are available with a removable T-bar key to prevent unauthorized operation of vent valves.
- Standard valves are offered with Graphite. PTFE is also available as an option
- Stem threads are completely isolated from the process.
- Bolted bonnet for strength and reliability.
- Flange gasket seal ensures a bubble-tight between body & bonnet.
- Adjustable gland flange allows easy access to the packing gland and packing adjustment for an effective stem seal.
- Investment cast yoke is precision casted for strength and perfect stem alignment.

Material of Construction

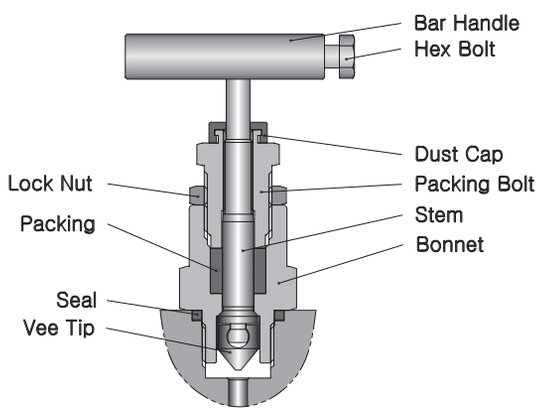

Bolted Bonnet

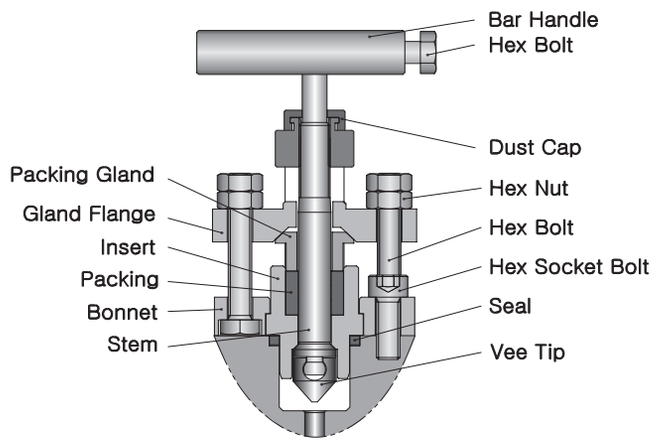

OS & Y Bonnet

Description		Material Grade			
		Stainless Steel	Carbon Steel	Lower Temp. Carbon Steel	Duplex Stainless Steel
Bonnet	Bolted	SS316 / A479 or A276	A105	A350 LF2	UNS S31803
	OS & Y	A351 CF8M	A216 WCB	A352 LCC	UNS S31803
Vee Tip		A564-630			UNS S31803
Stem		SS316 / A479 or A276			UNS S31803
Insert		SS316 / A479 or A276			UNS S31803
Packing, Seal		GRAPHITE / PTFE			
Hex Socket Bolt (OS & Y)		A193 B8M	A194 B7	A320 L7	A453-660
All Other Part		Stainless Steel			

NOTE

Stainless steel is standard body material but such a Monel, Super Duplex, Hastelloy, Inconel and other special material are available upon request.

SSB / SDB1F* Series

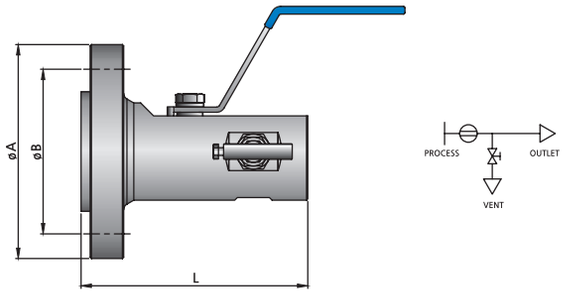

SSB1FA

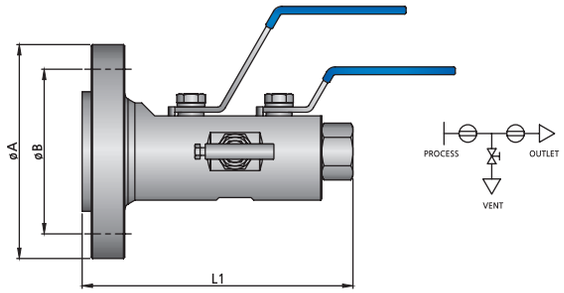

SDB1FA

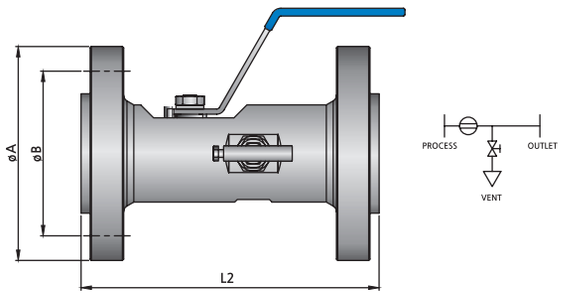

SSB1FB

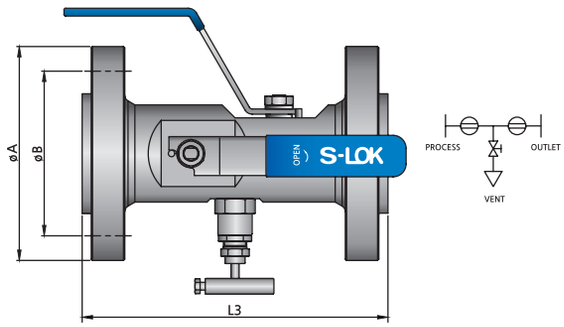

SDB1FB

Dimensions (Bore-10)

Size (Inch)	Pressure Rating (Class)	Dimension (mm)					
		L (RF)	L1 (RF)	L2 (RF)	L3 (RF)	øA	øB
1/2	150	130	170	160	180	90	60.3
	300	135	170	165	190	95	66.7
	600	140	175	180	205	95	66.7
	900/1500	155	195	205	230	120	82.6
	2500	165	200	225	250	135	88.9
3/4	150	135	170	160	190	100	69.9
	300	135	175	175	200	115	82.6
	600	145	180	190	215	115	82.6
	900/1500	160	200	215	235	130	88.9
	2500	165	205	225	255	140	95.2
1	150	135	170	165	190	110	79.4
	300	140	180	180	200	125	88.9
	600	150	185	195	215	125	88.9
	900/1500	165	210	225	255	150	101.6
	2500	170	220	240	270	160	108.0
1-1/2	150	140	180	170	190	125	98.4
	300	150	185	185	215	155	114.3
	600	155	195	205	230	155	114.3
	900/1500	175	215	245	265	180	123.8
	2500	190	240	285	315	205	146.0
2	150	145	185	180	210	150	120.7
	300	150	190	185	220	165	127.0
	600	155	195	205	230	165	127.0
	900/1500	175	220	245	275	215	165.1
	2500	195	240	295	320	235	171.4

* Dimensions are for reference only and are subject to change.

Dimensions (Bore-14)

Size (Inch)	Pressure Rating (Class)	Dimension (mm)					
		L (RF)	L1 (RF)	L2 (RF)	L3 (RF)	øA	øB
3/4	150	150	185	175	210	100	69.9
	300	155	195	185	225	115	82.6
	600	160	200	200	235	115	82.6
	900/1500	175	215	225	260	130	88.9
	2500	180	220	240	275	140	95.2
1	150	150	185	175	215	110	79.4
	300	155	195	190	225	125	88.9
	600	165	205	205	245	125	88.9
	900/1500	180	220	240	265	150	101.6
	2500	185	225	250	290	160	108.0
1-1/2	150	155	190	180	220	125	98.4
	300	160	200	200	235	155	114.3
	600	170	210	220	255	155	114.3
	900/1500	190	230	255	300	180	123.8
	2500	210	245	285	330	205	146.0
2	150	160	195	190	230	150	120.7
	300	160	200	200	235	165	127.0
	600	170	210	220	255	165	127.0
	900/1500	190	230	265	305	215	165.1
	2500	210	250	300	345	235	171.4

* Dimensions are for reference only and are subject to change.

Dimensions (Bore-20)

Size (Inch)	Pressure Rating (Class)	Dimension (mm)			
		L (RF)	L3 (RF)	øA	øB
1-1/2	150	230	230	125	98.4
	300	235	250	155	114.3
	600	245	270	155	114.3
	900/1500	270	315	180	123.8
	2500	305	375	205	146.0
3/4	150	230	245	150	120.7
	300	235	250	165	127.0
	600	245	270	165	127.0
	900/1500	270	315	215	165.1
	2500	310	380	235	171.4

* Dimensions are for reference only and are subject to change.

SDB3FB Series

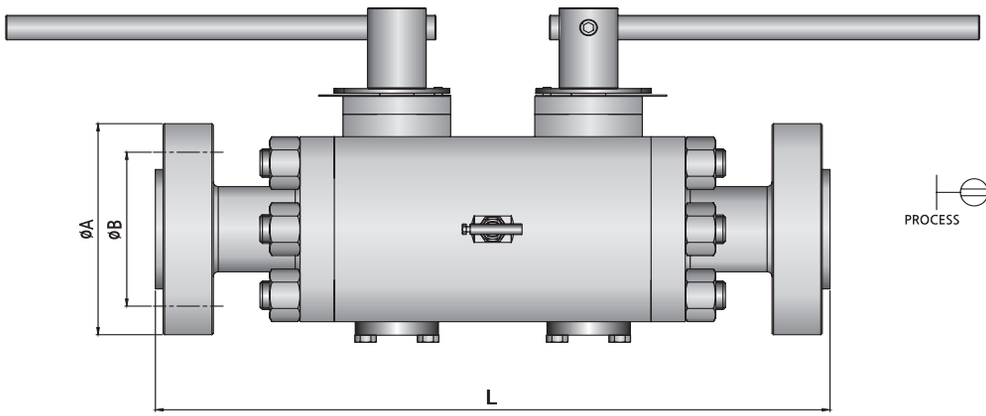

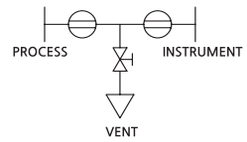

Dimensions (Reducing Bore)

Size (Inch)	Pressure Rating (Class)	Dimension (mm)		
		L (RF)	øA	øB
1	150	260	110	79.4
	300	275	125	88.9
	600	295	125	88.9
	900/1500	365	150	101.6
	2500	430	160	108.0
1-1/2	150	275	125	98.4
	300	290	155	114.3
	600	330	155	114.3
	900/1500	425	180	123.8
	2500	490	205	146.0
2	150	320	150	120.7
	300	330	165	127.0
	600	380	165	127.0
	900/1500	475	215	165.1
	2500	550	235	171.4

* Dimensions are for reference only and are subject to change.

Dimensions (Full Bore)

Size (Inch)	Pressure Rating (Class)	Dimension (mm)		
		L (RF)	øA	øB
1-1/2	150	310	125	98.4
	300	330	155	114.3
	600	395	155	114.3
	900/1500	460	180	123.8
	2500	540	205	146.0
2	150	365	150	120.7
	300	385	165	127.0
	600	420	165	127.0
	900/1500	520	215	165.1
	2500	690	235	171.4

* Dimensions are for reference only and are subject to change.

Sampling Double Block & Bleed Valves

- Sampling the process stream can be accomplished with this valve design, where a sampling can be taken even at full system pressure directly from the process line. The product allows double isolations from process for safety.
- The Sampling Probe length is manufactured to suit customer requirements.

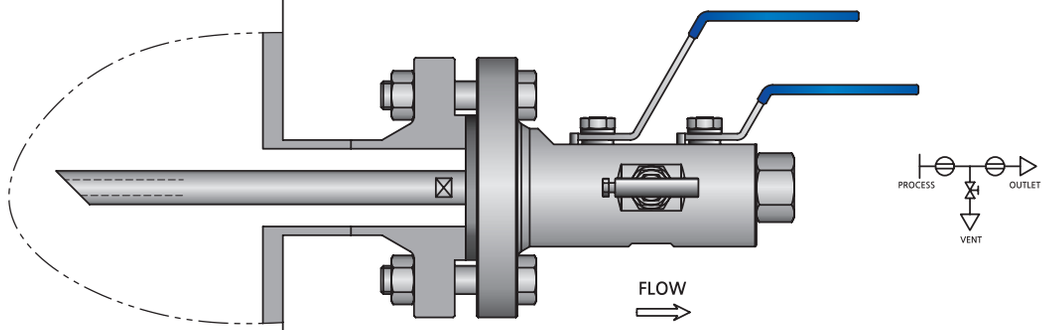

Injection Double Block & Bleed Valves

- Injection of chemicals and other media into the process stream can be accomplished with this valve design.
- The valve inlet houses a one way check valve which opens for injection and goes normally closed to eliminate process fluid outflow.
- The Injection Quill length is manufactured to suit customer requirements.
- The Injection Nozzle is a 3.2mm diameter hole. (Standard)

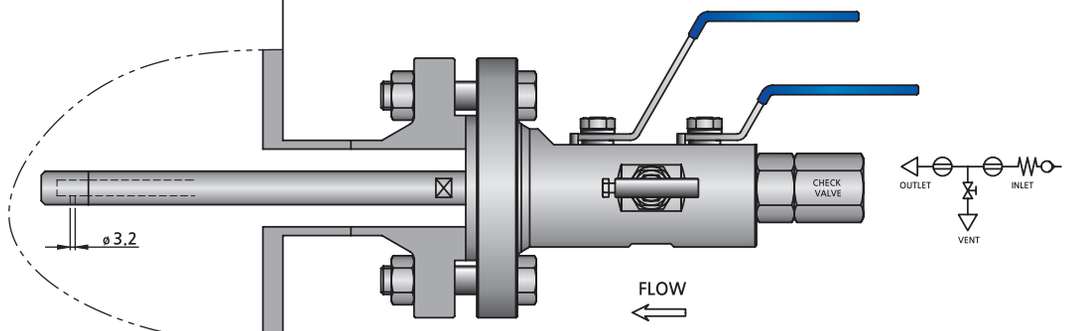

- Integral Check Valve

  : This poppet type spring return valve has a Viton soft seal (Standard)

Ordering Information

SDB1FA	14BBN	R32C8N	S6	PK	VT	LD	S6
(1)	(2)	(3)	(4)	(5)	(6)	(7)	(8)

(1) Valve Model & Body Type

SSB : Single Block & Bleed (Floating)
SDB : Double Block & Bleed (Floating)
SSBT : Single Block & Bleed (Trunnion)
SDBT : Double Block & Bleed (Trunnion)

1F : 1-piece Forged
2F : 2-piece Forged
3F : 3-piece Forged

A : Flanged x Female NPT
B : Flanged x Flanged
C : Female NPT x Female NPT
D : Male NPT x Female NPT
E : Socket Weld x Socket Weld
F : Socket Weld x Female NPT
G : Butt Weld x Butt Weld
H : Butt Weld x Female NPT

(2) Bore & Valve Type (Primary – Secondary – Vent)

10 : 10mm
14 : 14mm
20 : 19mm
25 : 25mm
32 : 31.8mm
38 : 38.1mm
50 : 50mm

B : Ball Valve
N : Needle Valve
O : OS & Y Needle Valve
G : Gate Valve

(3) Connection Detail (Inlet – Pressure Class – Outlet)

R- : Raised Face
F- : Flat Face
J- : Ring Type Joint
BW- : Butt Weld
SW- : Socket Weld
PE- : Plain End

-R : PT
-N : NPT
-G : PF

8 : 1/2″ (DN-15)
12 : 3/4″ (DN-20)
16 : 1″ (DN-25)
20 : 1-1/4″ (DN-32)
24 : 1-1/2″ (DN-40)
32 : 2″ (DN-50)

A : CLASS 150
B : CLASS 300
C : CLASS 600
D : CLASS 900
E : CLASS 1500
F : CLASS 2500
S : CLASS 800

(4)(8) Trim / Body Material

S6 : SS316/316L
S6L : SS316L
S4 : SS304
D : UNS S31803
SD : UNS S32750

S630 : SS630
A400 : Monel 400
A625 : Inconel 625
A825 : Inconel 825
AB : AL-Bronze

LF2 : A350 LF2
105 : A105
15N : A105N

(5) Seat Material

TE : PTFE
T1 : GLASS 15% PTFE
T2 : GLASS 25% PTFE
T3 : CARBON 15% PTFE
T4 : CARBON 25% PTFE

PK : PEEK
PC : PCTFE
DEV : DEVLON
NY6 : NYLON-6
PM : POM

TCC : METAL (Tungsten Carbide Coating)
STL : METAL (STELLITE Coating)

(6) O-Ring Material

NBR : NBR
HNB : HNBR
VT : VITON (FKM)

EP : EPDM
KA : KALREZ (FFKM)

-A : AED

(7) Option

FS : Fire Safety
LD : Locking Device
AT : Anti-Tamper Key
SP : Sampling Probe
IQ : Injection Quill

FEA : Fugitive Class-A
FEB : Fugitive Class-B
WO : Welding Overlay
WP : Vent Plug
WF : Vent Flange

LBT : Long Bonnet
V4N : Vent 1/4″NPT
LT : Low Temperature Service
CY : Cryogenic Service

SMNF Series Mono Flanged Valves

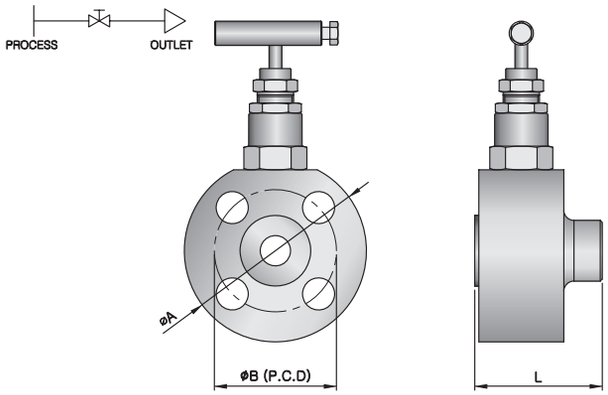

SMNF1P-A

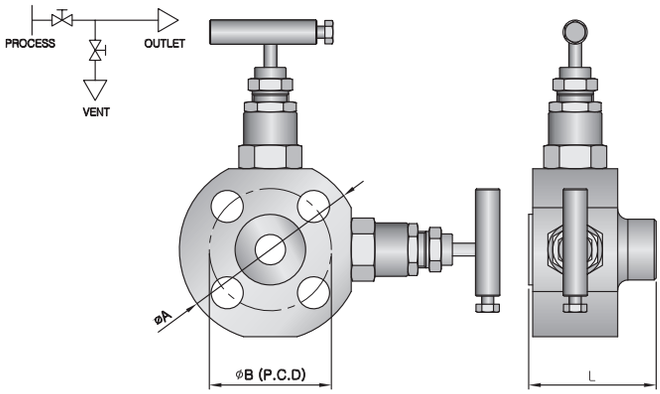

SMNF2P-A

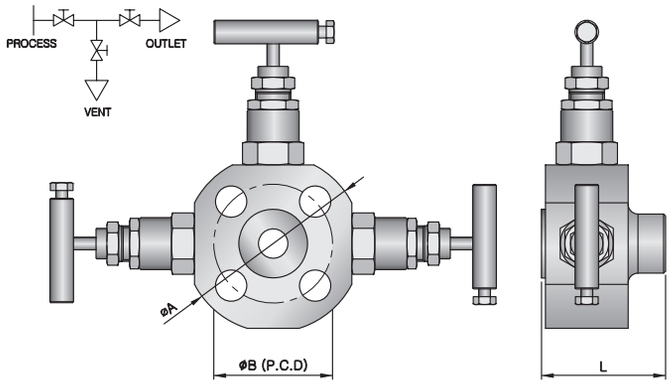

SMNF3P-A

Dimensions

Size (Inch)	Pressure Rating (Class)	Dimension (mm)		
		L (RF)	øA	øB
1/2	150	63	90	60.3
	300	63	95	66.7
	600	68	95	66.7
	900/1500	68	120	82.6
	2500	68	135	88.9
3/4	150	63	100	69.9
	300	63	115	82.6
	600	68	115	82.6
	900/1500	68	130	88.9
	2500	72	140	95.2
1	150	63	110	79.4
	300	63	125	88.9
	600	68	125	88.9
	900/1500	72	150	101.6
	2500	72	160	108.0
1-1/2	150	63	125	98.4
	300	68	155	114.3
	600	72	155	114.3
	900/1500	72	180	123.8
	2500	78	205	146.0
2	150	68	150	120.7
	300	68	165	127.0
	600	72	165	127.0
	900/1500	72	215	165.1
	2500	78	235	171.4

Ordering Information

SMNF1P	A	R8A8N	GF	AT	S6
(1)	(2)	(3)	(4)	(5)	(6)

(1) Valve Model & Body Type

SMNF: Mono Flange Valves

1P : Block Valve
2P : Single Block & Bleed Valves
3P : Double Block & Bleed Valves

(2) Valve Type (Primary – Secondary – Vent)

Valve type		Primary Valve	Secondary Valve	Bleed Valve
1P	A	Bolted Needle	-	-
	B	OS&Y Needle	-	-
2P	A	Bolted Needle	-	Bolted Needle
	B	OS&Y Needle	-	Bolted Needle
3P	A	Bolted Needle	Bolted Needle	Bolted Needle
	B	OS&Y Needle	Bolted Needle	Bolted Needle
	C	OS&Y Needle	OS&Y Needle	Bolted Needle

(3) Connection Detail (Inlet – Pressure Class – Outlet)

R- : Raised Face
F- : Flat Face
J- : Ring Type Joint

-R : PT
-N : NPT
-G : PF

8 : 1/2″ (DN-15)
12 : 3/4″ (DN-20)
16 : 1″ (DN-25)
20 : 1-1/4″ (DN-32)
24 : 1-1/2″ (DN-40)
32 : 2″ (DN-50)

A : CLASS 150
B : CLASS 300
C : CLASS 600
D : CLASS 900
E : CLASS 1500
F : CLASS 2500

(4) Packing Material

TE : PTFE
GF : GRAPHITE

(5) Option

FS : Fire Safety
LD : Locking Device
AT : Anti-Tamper Key
WP: Vent Plug

FEA : Fugitive Class-A
FEB : Fugitive Class-B
V4N : Vent 1/4″ NPT

(6) Body Material

S6 : SS316/316L
S6L : SS316L
S4 : SS304
D : UNS S31803
SD : UNS S32750

S630 : SS630
A400 : Monel 400
A625 : Inconel 625
A825 : Inconel 825
AB : AL-Bronze

LF2 : A350 LF2
105 : A105
15N : A105N

S-LOK®

Bleed & Purge Valves

The best partner for value creation
We support the innovations of customer

06

Catalogue No. S-LOK Mar.2024

SBLV Series Bleed Valves

S-LOK bleed valve is designed to use on instrumental fluidhandling apparatus such as manifolds and gauge root valves in order to vent signal line pressure to atmosphere before disassembly of an instrument or to facilitate in calibration of a control device.

Features

- Pressure rating up to 10,000psi(689bar)@100˚C(38˚C).
- Back stop screw prevents from the accidental removal of stem.
- Stem is Hard Chrome Plated for maximum service life.
- Size range from 1/8″ to 1/2″ Tubing and piping system.
- Variety of End connections include S-LOK, NPT & ISO pipe threads Male/ Female

Technical Data

Material	Temperature Rating	Pressure Rating
Stainless Steel 316	-65 to 850˚F (-54 to 454˚C)	10,000psi(689bar) at 100˚F(38˚C)
Carbon Steel	-20 to 450˚F (-29 to 232˚C)	
Alloy 400	-65 to 500˚F (-54 to 260˚C)	

CNG / NGV Certifications

Valve Series	Certificates	ECE R110	ANSI NGV 3.1 - 2012	ISO 15500
SBLV Series	Certificate No.	110R-126838	126838AUT13	126838MECH102
	Classification	Class 0	Manual valve	Manual valve
	Temperature	-40 to 120˚C (-40 to 248˚F)	-40 to 120˚C (-40 to 248˚F)	-40 to 120˚C (-40 to 248˚F)
	Working Pressure	260 bar @ 120˚C	248 bar @ 120˚C	260 bar @ 120˚C

Materials of construction

Description	Body Materials / ASTM and JIS Spec.		
	Stainless Steel 316	Carbon Steel	Alloy 400
Body	SS316 A276 or A479	S45C	Monel 400 / B164
Stem		SS316 A276 or A479	
Back Stop Screw			
Vent Tube	SS316 A213 or A269		Monel 400 / B165

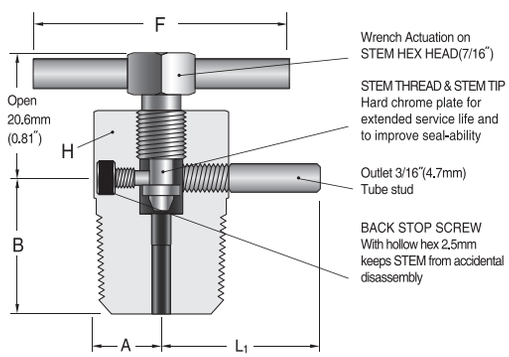

Ordering Information and Dimensions

Basic Ordering Number	End Connection	Orifice mm. (Cv)	Dimensions inch (mm)				
			A	B	L_1	H	F
SBLV-M-2N	1/8″ Male NPT	3.2 (0.25)	0.31 (7.9)	0.75 (19.1)	0.91 (23.0)	5/8 (15.87)	2.0 (50.8)
SBLV-M-4N	1/4″ Male NPT						
SBLV-M-6N	3/8″ Male NPT		0.44 (11.1)	0.88 (22.5)	1.03 (26.2)	7/8 (22.2)	
SBLV-M-8N	1/2″ Male NPT						

SBLV-M-2N — Basic Ordering Number

BH — Handle
- Nil : Hex head
- BH : Bar handle

BV — Vent Tube
- Nil : Standard tube
- BV : Barbed vent tube

S6 — Body Material
- S6 : 316 Stainless steel
- CS : Carbon steel
- A400 : Alloy 400

SPUV Series Purge Valves

S-LOK Purge valves are mainly for bleed, vent or drain purpose. The knurled cap is not separable from the valve body for safety purpose. 1/4 turns of wrench pull-up from finger tight gives leak-free closure on first make-up. Proper tightening with a wrench secures for the closer rate to the desired pressure rate with sufficient make-ups.

Features

- Pressure rating up to 4,000psig(275bar) for 316 stainless steel and up to 3,000 psig(206bar) for Carbon Steel and Brass at 100˚F(38˚C)
- Temperature rating from -65˚F to 600˚F(-54˚C to 315˚C) with Stainless Steel, from -65˚F to 400˚F (-54˚C to 204˚C) with carbon steel, from -20˚F to 350˚F(-29˚C to 177˚C) with brass.
- Vent hole bleeds excessive liquid or gas from the system lines.
- Knurled cap is crimped to valve body to prevent an accidental removal of the body.
- Size range from 1/8″ to 1/2″ tubing and piping system.
- Variety of end connections including S-LOK tube fittings, male/female NPT and ISO, SAE threads.

CNG / NGV Certifications

Valve Series	Certificates	ECE R110	ANSI NGV 3.1 - 2012	ISO 15500
SPUV Series	Certificate No.	110R-126838	126838AUT13	126838MECH102
	Classification	Class 0	Manual valve	Manual valve
	Temperature	-40 to 120˚C (-40 to 248˚F)	-40 to 120˚C (-40 to 248˚F)	-40 to 120˚C (-40 to 248˚F)
	Working Pressure	260 bar @ 120˚C	248 bar @ 120˚C	260 bar @ 120˚C

Ordering Information and Dimensions

Basic Ordering Number			Connection Type	Dimensions inch (mm)		
				L	h	H
SPUV	F	-2N	1/8 Female NPT	1.56 (35.3)	9/16 (14.28)	5/8 (15.87)
	F	-4N	1/4 Female NPT	1.75 (39.8)	3/4 (19.05)	
	F	-6N	3/8 Female NPT	1.81 (41.6)	7/8 (22.22)	
	F	-8N	1/2 Female NPT	1.98 (46.5)	1-1/16 (26.98)	
	M	-2N	1/8 Male NPT	1.62 (36.8)	1/2 (12.7)	
	M	-4N	1/4 Male NPT	1.81 (41.9)	9/16 (14.28)	
	M	-6N	3/8 Male NPT	1.84 (42.4)	11/16 (17.46)	
	M	-8N	1/2 Male NPT	2.09 (48.7)	7/8 (22.22)	
	M	-4U	1/4in, 7/16-20	1.69 (38.0)	9/16 (14.28)	
	M	-8U	1/2in, 3/4-16	1.81 (41.6)	7/8 (22.22)	
	S	-2T	1/8 S-LOK	1.84 (42.6)	1/2 (12.7)	
	S	-4T	1/4 S-LOK	1.94 (44.9)	1/2 (12.7)	
	S	-6T	3/8 S-LOK	2.03 (47.2)	5/8 (15.87)	
	S	-8T	1/2 S-LOK	2.19 (51.0)	13/16 (20.64)	
	S	-6M	6mm S-LOK	1.94 (45.0)	(14.0)	
	S	-8M	8mm S-LOK	2.0 (46.3)	(15.0)	
	T	-4T	1/4 Tube Stub	1.87 (43.2)	1/2 (12.7)	
	T	-6T	3/8 Tube Stub	1.94 (44.6)	1/2 (12.7)	
	T	-8T	1/2 Tube Stub	2.15 (50.3)	9/16 (14.28)	

Materials of construction

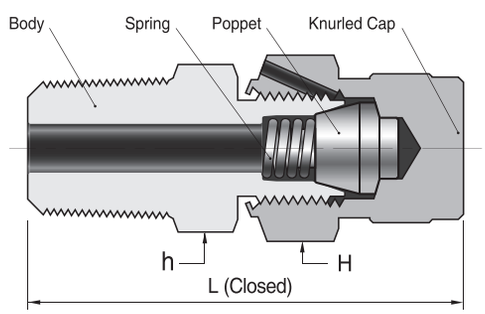

Description	Body MaterialsGrade / ASTM Spec.		
	Stainless Steel 316	Carbon Steel	Brass
Body	SS316 A276 or A479	Carbon Steel	Brass
Knurled Cap			
Poppet	SS316 / A276 or A479		
Spring	SS302 / A313		

How to Order

Use S6 for 316 stainless steel, CS for carbon steel, or BS for brass as a suffix to the basic part number. (※ Example : SPUV-S–2T-S6)

Option

PTFE Poppet : PTFE poppet provides leak tight shut-off with finger Pressure rating up to 200 psig (13.7bar) at 100˚F (37˚C) Temperature rating up to 300˚F (176˚C) To order, add designator-P as a suffix to the basic part number. **Example** : SPUV-S-2N-P-S6

Caution : When installing a S-LOK purge valve, the vent hole should be positioned not to influence the system fluid on operators. As the vent hole turns with the cap, discharging the valve is executed by turning the cap and be sure that purge valves should be always opened slowly in order to protect operators from exposure to hazardous system fluids.

S-LOK®

Diaphragm Valves

The best partner for value creation
We support the innovations of customers

07

Catalogue No. S-LOK Mar.2024

Features

- 316L Stainless steel body material
  (316L Single and double melting stainless steel materials available)
- Ni-Co alloy material diaphragm for strength and corrosion resistance
- Fully contained seat design minimizes particle generation
- Maximize flow capacity & minimize entrapment areas
- Optimal design for long cycle life
- Manual and pneumatic actuator
- All Valves are factory tested with helium.

Cleaning and Packaging

- All parts are free of emulsion composition and residuesinvolved in the machining process.
- Valves are assembled, inspected, tested and packaged in a CLASS 10-100 cleanroom.
- Double bag packaging is standard, and the inner bag contains ultra pure nitrogen.

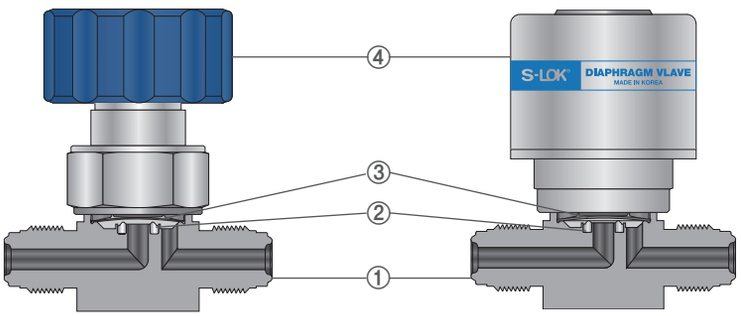

Meterials of Construction

No.	Component	Material
1	Body	316L Stainless Steel (Single / Double Melt)
2	Seat	PCTFE
3	Diaphragm	Ni-Co Alloy
4	Actuation	Aluminum

Product Grade

Level	Inner Surface Roughness	
	Ra	Ry
EP	≤ 5 μ inch	≤ 0.7 μm
BA	≤ 10 μ inch	≤ 3.0 μm
AP	≤ 100 μ inch	≤ 25 μm

Moisture Test

Test procedure per SEMI F58 for
low surface area component, time to recover to baseline from 200 ppb spike in 1 hour.

Reliability

- More than 3 million cycles for pneumatic valves.
- More than 100,000 cycles for manual valves.

Chemical Composition

Element	Composition, Wt%									
	C	Si	Mn	P	S	Ni	Cr	Mo	Cu	Al
SS316L Singe Melt	≤ 0.03	≤ 0.75	≤ 0.8	≤ 0.04	≤ 0.005	12.0~16.0	16.0~18.0	2.0~3.0	≤ 0.5	-
SS316L Double Melt	≤ 0.01	≤ 0.3	≤ 0.4	≤ 0.03	≤ 0.003	14.5~15.0	16.5~17.0	2.2~2.5	≤ 0.25	≤ 0.01
SS316L VIM/VAR	≤ 0.01	≤ 0.2	≤ 0.05	≤ 0.02	≤ 0.003	14.5~15.0	16.5~17.0	2.2~2.5	≤ 0.2	≤ 0.01

Specifications

Size in.	Working Pressure Mpa (psig)	Temperature Rating ℃ (□)	Flow Coefficient (Cv)	Orifice mm (in.)	Across the Seat Helium Leak Rates	Inboard Helium Leak Rates	Particle Inspection (EP) (0.1 μm and Larger)
1/4	1 (145)	-10 ~ 80 (-23 ~ 176)	0.3	4.4 (0.17)	≤ 1 x 10^{-9} atm cc/sec	≤ 1 x 10^{-9} atm cc/sec	No count Pressure: 60~80psi N2 Gas
3/8, 1/2, 3/4			0.7	7.0 (0.27)			

Low Pressure Diaphragm Vavle - Forged Body - Manual Handle

Handle Position

OPEN

CLOSE

Ordering Information

SFDV	-	MG	-	8	-	EP	-	S6LS
Valve Model		Connection Type		Connection Size		Product Grade		Body Material

Valve Model	Connection Type	Connection Size	Product Grade	Body Material
- **SFDV** : Low Pressure Diaphragm Valve - Forged Body - Manual Handle	- **MG** : Male Metal Face Seal - **FG** : Female Metal Face Seal - **S** : S-LOK - **BW** : Tube Butt Weld	- **4** : 1/4" - **6** : 3/8" - **8** : 1/2" - **12** : 3/4"	- **BA** : BA - **EP** : EP	- **S6LS** : SS316L Single Melt - **S6LV** : SS316L Double Melt

Dimensions

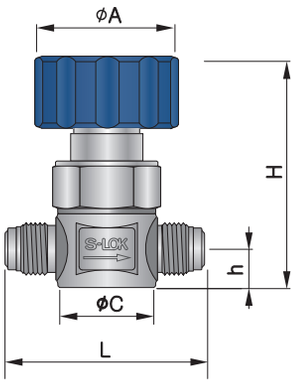

Male Metal Face Seal

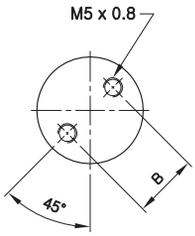

Bottom

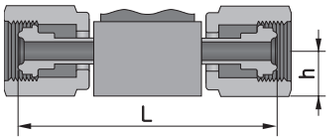

• Female Metal Face Seal

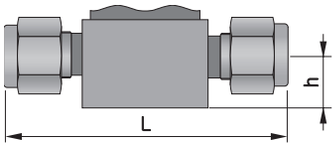

• S-LOK Tube Fititng

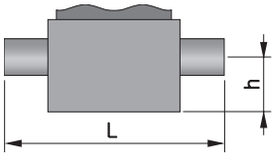

• Tube Butt Weld

Basic Ordering Number	End Connection	Demensions, mm					
		L	h	H	A	B	C
SFDV-MG-4	Male MFS 1/4"	58	11	66.1	40	17	28
SFDV-MG-8	Male MFS 1/2"	76	16	78.2	40	28	38
SFDV-MG-12	Male MFS 3/4"	122	22	84.2	40	28	38
SFDV-FG-4	Female MFS 1/4"	78	11	66.1	40	17	28
SFDV-FG-8	Female MFS 1/2"	104.6	16	78.2	40	28	38
SFDV-FG-12	Female MFS 3/4"	122	22	84.2	40	28	38
SFDV-S-4	S-LOK 1/4"	69.5	11	66.1	40	17	28
SFDV-S-6	S-LOK 3/8"	82.8	16	78.2	40	28	38
SFDV-S-8	S-LOK 1/2"	90.9	16	78.2	40	28	38
SFDV-S-12	S-LOK 3/4"	103.8	22	84.2	40	28	38
SFDV-BW-4	Tube Butt Weld 1/4"	54	11	66.1	40	17	18
SFDV-BW-6	Tube Butt Weld 3/8"	69	16	78.2	40	28	38
SFDV-BW-8	Tube Butt Weld 1/2"	69	16	78.2	40	28	38
SFDV-BW-12	Tube Butt Weld 3/4"	150	22	84.2	40	28	38

Low Pressure Diaphragm Vavle - Square Body - Manual Handle

Handle Position

OPEN

CLOSE

Ordering Information

SSDV	-	MG	-	8	-	EP	-	S6LS
Valve Model		Connection Type		Connection Size		Product Grade		Body Material

Valve Model	Connection Type	Connection Size	Product Grade	Body Material
- **SSDV** : Low Pressure Diaphragm Valve - Square Body - Manual Handle	- **MG** : Male Metal Face Seal - **FG** : Female Metal Face Seal - **S** : S-LOK - **BW** : Tube Butt Weld	- **4** : 1/4” - **6** : 3/8” - **8** : 1/2” - **12** : 3/4”	- **BA** : BA - **EP** : EP	- **S6LS** : SS316L Single Melt - **S6LV** : SS316L Double Melt

Dimensions

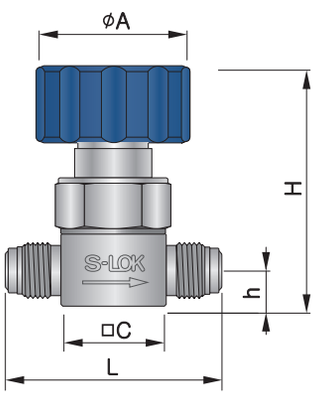

Male Metal Face Seal

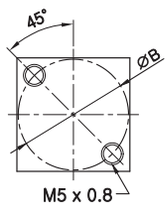

Bottom

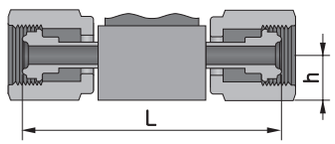

• Female Metal Face Seal

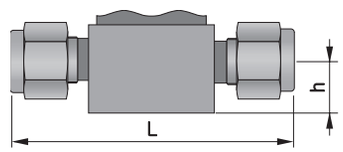

• S-LOK Tube Fititng

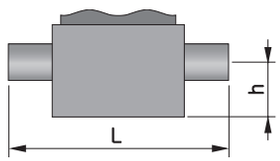

• Tube Butt Weld

Basic Ordering Number	End Connection	Demensions, mm					
		L	h	H	A	B	C
SSDV-MG-4	Male MFS 1/4"	57	11	64.1	40	25.4	26
SSDV-MG-8	Male MFS 1/2"	76.2	16	76.2	40	28	37
SSDV-MG-12	Male MFS 3/4"	122	22	82.2	40	28	37
SSDV-FG-4	Female MFS 1/4"	70.6	11	64.1	40	25.4	26
SSDV-FG-8	Female MFS 1/2"	83	16	76.2	40	28	37
SSDV-FG-12	Female MFS 3/4"	122	22	82.2	40	28	37
SSDV-S-4	S-LOK 1/4"	69.5	11	64.1	40	25.4	26
SSDV-S-6	S-LOK 3/8"	82.8	16	76.2	40	28	37
SSDV-S-8	S-LOK 1/2"	90.9	16	76.2	40	28	37
SSDV-S-12	S-LOK 3/4"	106	22	82.2	40	28	37
SSDV-BW-4	Tube Butt Weld 1/4"	54	11	64.1	40	25.4	26
SSDV-BW-6	Tube Butt Weld 3/8"	69	16	76.2	40	28	37
SSDV-BW-8	Tube Butt Weld 1/2"	69	16	76.2	40	28	37
SSDV-BW-12	Tube Butt Weld 3/4"	150	22	82.2	40	28	37

Low Pressure Diaphragm Vavle - Forged Body - Pneumatic Actuator

Actuator configuration

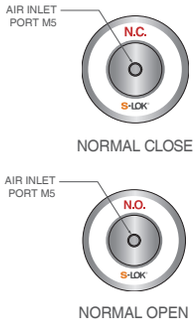

Ordering Information

SFPDV	-	MG	-	8	-	NC	-	EP	-	S6LS
Valve Model		Connection Type		Connection Size		Actuation		Product Grade		Body Material

Valve Model	Connection Type	Connection Size	Actuation	Product Grade	Body Material
- **SFPDV** : Low Pressure Diaphragm Valve - Forged Body - Pneumatic Actuator	- **MG** : Male Metal Face Seal - **FG** : Female Metal Face Seal - **S** : S-LOK - **BW** : Tube Butt Weld	- **4** : 1/4" - **6** : 3/8" - **8** : 1/2" - **12** : 3/4"	- **NC** : Normally Closed - **NO** : Normally Open	- **BA** : BA - **EP** : EP	- **S6LS** : SS316L Single Melt - **S6LV** : SS316L Double Melt

Dimensions

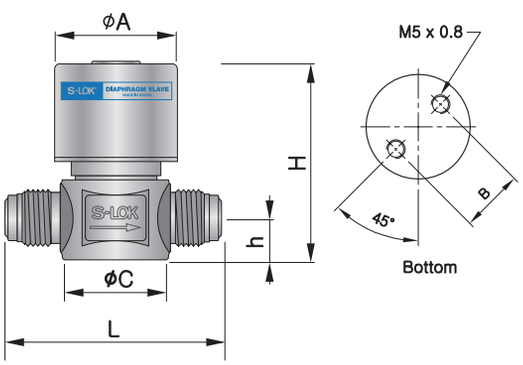

Male Metal Face Seal

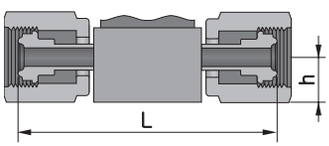

• Female Metal Face Seal

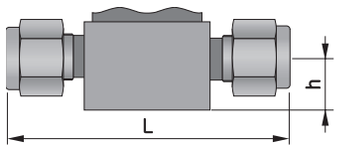

• S-LOK Tube Fititng

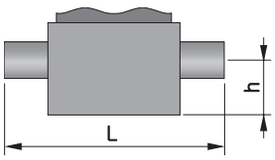

• Tube Butt Weld

Basic Ordering Number	End Connection	Demensions, mm					
		L	h	H	A	B	C
SFPDV-MG-4	Male MFS 1/4"	58	11	66.3	40	17	28
SFPDV-MG-8	Male MFS 1/2"	76	16	82.4	52	28	38
SFPDV-MG-12	Male MFS 3/4"	122	22	88.4	52	28	38
SFPDV-FG-4	Female MFS 1/4"	78	11	66.3	40	17	28
SFPDV-FG-8	Female MFS 1/2"	104.6	16	82.4	52	28	38
SFPDV-FG-12	Female MFS 3/4"	122	22	88.4	52	28	38
SFPDV-S-4	S-LOK 1/4"	69.5	11	66.3	40	17	28
SFPDV-S-6	S-LOK 3/8"	82.8	16	82.4	52	28	38
SFPDV-S-8	S-LOK 1/2"	90.9	16	82.4	52	28	38
SFPDV-S-12	S-LOK 3/4"	103.8	22	88.4	52	28	38
SFPDV-BW-4	Tube Butt Weld 1/4"	54	11	66.3	40	17	18
SFPDV-BW-6	Tube Butt Weld 3/8"	69	16	82.4	52	28	38
SFPDV-BW-8	Tube Butt Weld 1/2"	69	16	82.4	52	28	38
SFPDV-BW-12	Tube Butt Weld 3/4"	150	22	88.4	52	28	38

Low Pressure Diaphragm Vavle - Square Body - Pneumatic Actuator

Actuator configuration

NORMAL CLOSE

NORMAL OPEN

Ordering Information

SSPDV	-	MG	-	8	-	NC	-	EP	-	S6LS
Valve Model		Connection Type		Connection Size		Actuation		Product Grade		Body Material

Valve Model	Connection Type	Connection Size	Actuation	Product Grade	Body Material
- **SSPDV** : Low Pressure Diaphragm Valve - Square Body - Pneumatic Actuator	- **MG** : Male Metal Face Seal - **FG** : Female Metal Face Seal - **S** : S-LOK - **BW** : Tube Butt Weld	- **4** : 1/4” - **6** : 3/8” - **8** : 1/2” - **12** : 3/4”	- **NC** : Normally Closed - **NO** : Normally Open	- **BA** : BA - **EP** : EP	- **S6LS** : SS316L Single Melt - **S6LV** : SS316L Double Melt

Dimensions

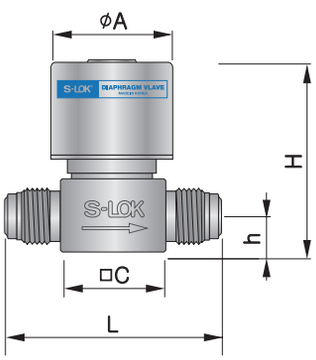

Male Metal Face Seal

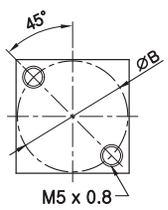

Bottom

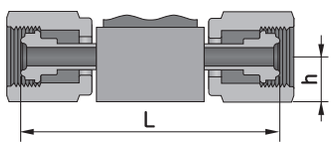

• Female Metal Face Seal

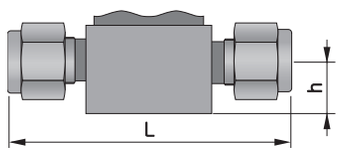

• S-LOK Tube Fititng

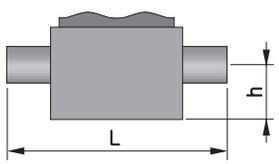

• Tube Butt Weld

Basic Ordering Number	End Connection	Demensions, mm					
		L	h	H	A	B	C
SSPDV-MG-4	Male MFS 1/4"	57	11	64.3	40	25.4	26
SSPDV-MG-8	Male MFS 1/2"	76.2	16	80.4	52	28	37
SSPDV-MG-12	Male MFS 3/4"	122	22	86.4	52	28	37
SSPDV-FG-4	Female MFS 1/4"	70.6	11	64.3	40	25.4	26
SSPDV-FG-8	Female MFS 1/2"	83	16	80.4	52	28	37
SSPDV-FG-12	Female MFS 3/4"	122	22	86.4	52	28	37
SSPDV-S-4	S-LOK 1/4"	69.5	11	64.3	40	25.4	26
SSPDV-S-6	S-LOK 3/8"	82.8	16	80.4	52	28	37
SSPDV-S-8	S-LOK 1/2"	90.9	16	80.4	52	28	37
SSPDV-S-12	S-LOK 3/4"	106	22	86.4	52	28	37
SSPDV-BW-4	Tube Butt Weld 1/4"	54	11	64.3	40	25.4	26
SSPDV-BW-6	Tube Butt Weld 3/8"	69	16	80.4	52	28	37
SSPDV-BW-8	Tube Butt Weld 1/2"	69	16	80.4	52	28	37
SSPDV-BW-12	Tube Butt Weld 3/4"	150	22	86.4	52	28	37

Low Pressure Diaphragm Vavle - Forged Body - Shutoff Type - Quarter-turn actuation

Handle Position

OPEN

CLOSE

Ordering Information

SFQDV	-	MG	-	8	-	LN	-	EP	-	S6LS
Valve Model		Connection Type		Connection Size		Option		Product Grade		Body Material

Valve Model	Connection Type	Connection Size	Option	Product Grade	Body Material
- **SFQDV** : Low Pressure Diaphragm Valve - Forged Body - Shutoff Type	- **MG** : Male Metal Face Seal - **FG** : Female Metal Face Seal - **S** : S-LOK - **BW** : Tube Butt Weld	- **4** : 1/4" - **6** : 3/8" - **8** : 1/2" - **12** : 3/4"	- **Blank** : No Option - **LN** : Lock Nut	- **BA** : BA - **EP** : EP	- **S6LS** : SS316L Single Melt - **S6LV** : SS316L Double Melt

Dimensions

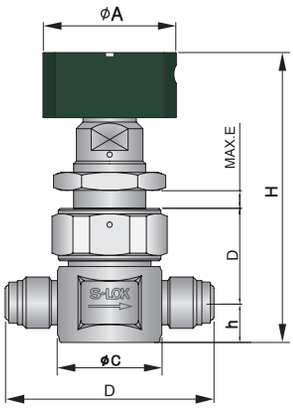

Male Metal Face Seal

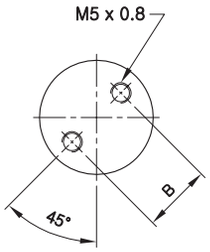

Bottom

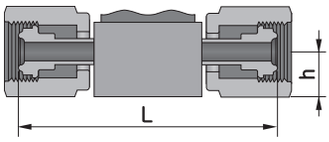

• Female Metal Face Seal

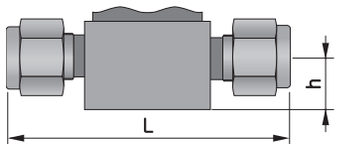

• S-LOK Tube Fititng

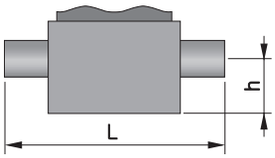

• Tube Butt Weld

Basic Ordering Number	End Connection	Demensions, mm							
		L	h	H	A	B	C	D	E
SFQDV-MG-4	Male MFS 1/4"	58	11	80.2	37	17	28	26	5
SFQDV-MG-8	Male MFS 1/2"	76	16	106.7	50	28	38	33.6	10
SFQDV-MG-12	Male MFS 3/4"	122	22	110.7	50	28	38	31.6	10
SFQDV-FG-4	Female MFS 1/4"	78	11	80.2	37	17	28	26	5
SFQDV-FG-8	Female MFS 1/2"	104.6	16	106.7	50	28	38	33.6	10
SFQDV-FG-12	Female MFS 3/4"	122	22	110.7	50	28	38	31.6	10
SFQDV-S-4	S-LOK 1/4"	69.5	11	80.2	37	17	28	26	5
SFQDV-S-6	S-LOK 3/8"	82.8	16	106.7	50	28	38	33.6	10
SFQDV-S-8	S-LOK 1/2"	90.9	16	106.7	50	28	38	33.6	10
SFQDV-S-12	S-LOK 3/4"	103.8	22	110.7	50	28	38	31.6	10
SFQDV-BW-4	Tube Butt Weld 1/4"	54	11	80.2	37	17	28	26	5
SFQDV-BW-6	Tube Butt Weld 3/8"	69	16	106.7	50	28	38	33.6	10
SFQDV-BW-8	Tube Butt Weld 1/2"	69	16	106.7	50	28	38	33.6	10
SFQDV-BW-12	Tube Butt Weld 3/4"	150	22	110.7	50	28	38	31.6	10

Low Pressure Diaphragm Vavle - Square Body - Shutoff Type

Handle Position

OPEN

CLOSE

Ordering Information

SSQDV	-	MG	-	8	-	LN	-	EP	-	S6LS
Valve Model		Connection Type		Connection Size		Option		Product Grade		Body Material

Valve Model	Connection Type	Connection Size	Option	Product Grade	Body Material
- **SSQDV** : Low Pressure Diaphragm Valve - Square Body - Shutoff Type	- **MG** : Male Metal Face Seal - **FG** : Female Metal Face Seal - **S** : S-LOK - **BW** : Tube Butt Weld	- **4** : 1/4” - **6** : 3/8” - **8** : 1/2” - **12** : 3/4”	- **Blank** : No Option - **LN** : Lock Nut	- **BA** : BA - **EP** : EP	- **S6LS** : SS316L Single Melt - **S6LV** : SS316L Double Melt

Dimensions

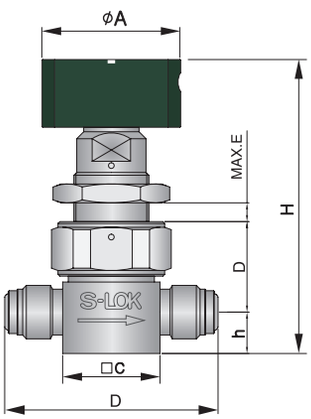

Male Metal Face Seal

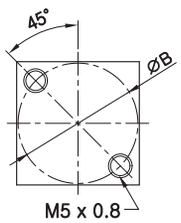

Bottom

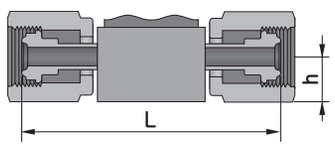

• Female Metal Face Seal

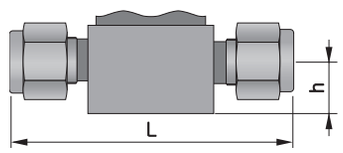

• S-LOK Tube Fititng

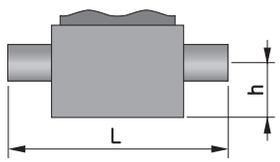

• Tube Butt Weld

Basic Ordering Number	End Connection	Demensions, mm							
		L	h	H	A	B	C	D	E
SSQDV-MG-4	Male MFS 1/4"	57	11	78.2	37	25.4	26	24	5
SSQDV-MG-8	Male MFS 1/2"	76.2	16	104.7	50	28	37	31.6	10
SSQDV-MG-12	Male MFS 3/4"	122	22	111.2	50	28	37	31.6	10
SSQDV-FG-4	Female MFS 1/4"	70.6	11	78.2	37	25.4	26	24	5
SSQDV-FG-8	Female MFS 1/2"	83	16	104.7	50	28	37	31.6	10
SSQDV-FG-12	Female MFS 3/4"	122	22	111.2	50	28	37	31.6	10
SSQDV-S-4	S-LOK 1/4"	69.5	11	78.2	37	25.4	26	24	5
SSQDV-S-6	S-LOK 3/8"	82.8	16	104.7	50	28	37	31.6	10
SSQDV-S-8	S-LOK 1/2"	90.9	16	104.7	50	28	37	31.6	10
SSQDV-S-12	S-LOK 3/4"	106	22	111.2	50	28	37	31.6	10
SSQDV-BW-4	Tube Butt Weld 1/4"	54	11	78.2	37	25.4	26	24	5
SSQDV-BW-6	Tube Butt Weld 3/8"	69	16	104.7	50	28	37	31.6	10
SSQDV-BW-8	Tube Butt Weld 1/2"	69	16	104.7	50	28	37	31.6	10
SSQDV-BW-12	Tube Butt Weld 3/4"	150	22	111.2	50	28	37	31.6	10

Low Pressure Diaphragm Vavle - Forged Body - Locking Type - Quarter-turn actuation

Handle Position

OPEN

CLOSE

Ordering Information

SFDVQ	-	MG	-	8	-	EP	-	S6LS
Valve Model		Connection Type		Connection Size		Product Grade		Body Material

Valve Model	Connection Type	Connection Size	Product Grade	Body Material
- **SFDVQ** : Low Pressure Diaphragm Valve - Forged Body - Locking	- **MG** : Male Metal Face Seal - **FG** : Female Metal Face Seal - **S** : S-LOK - **BW** : Tube Butt Weld	- **4** : 1/4" - **6** : 3/8" - **8** : 1/2" - **12** : 3/4"	- **BA** : BA - **EP** : EP	- **S6LS** : SS316L Single Melt - **S6LV** : SS316L Double Melt

Dimensions

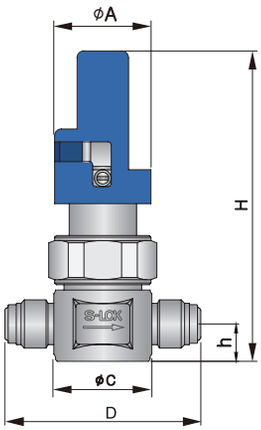

Male Metal Face Seal

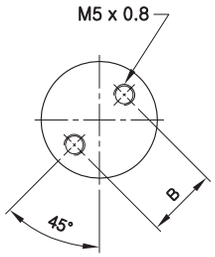

Bottom

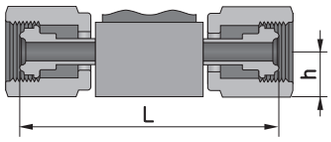

• Female Metal Face Seal

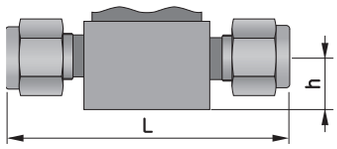

• S-LOK Tube Fititng

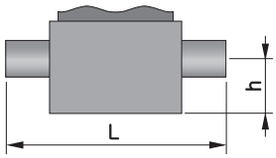

• Tube Butt Weld

Basic Ordering Number	End Connection	Demensions, mm					
		L	h	H	A	B	C
SFDVQ-MG-4	Male MFS 1/4"	58	11	91.5	28.5	17	28
SFDVQ-MG-8	Male MFS 1/2"	76	16	104.3	28.5	28	38
SFDVQ-MG-12	Male MFS 3/4"	122	22	110.3	28.5	28	38
SFDVQ-FG-4	Female MFS 1/4"	78	11	91.5	28.5	17	28
SFDVQ-FG-8	Female MFS 1/2"	104.6	16	104.3	28.5	28	38
SFDVQ-FG-12	Female MFS 3/4"	122	22	110.3	28.5	28	38
SFDVQ-S-4	S-LOK 1/4"	69.5	11	91.5	28.5	17	28
SFDVQ-S-6	S-LOK 3/8"	82.8	16	104.3	28.5	28	38
SFDVQ-S-8	S-LOK 1/2"	90.9	16	110.3	28.5	28	38
SFDVQ-S-12	S-LOK 3/4"	103.8	22	110.3	28.5	28	38
SFDVQ-BW-4	Tube Butt Weld 1/4"	54	11	91.5	28.5	17	28
SFDVQ-BW-6	Tube Butt Weld 3/8"	69	16	104.3	28.5	28	38
SFDVQ-BW-8	Tube Butt Weld 1/2"	69	16	110.3	28.5	28	38
SFDVQ-BW-12	Tube Butt Weld 3/4"	150	22	110.3	28.5	28	38

Low Pressure Diaphragm Vavle - Square Body - Locking Type - Quarter-turn actuation

Handle Position

OPEN

CLOSE

Ordering Information

SSDVQ	-	MG	-	8	-	EP	-	S6LS
Valve Model		Connection Type		Connection Size		Product Grade		Body Material

Valve Model	Connection Type	Connection Size	Product Grade	Body Material
- **SSDVQ** : Low Pressure Diaphragm Valve - Square Body - Locking	- **MG** : Male Metal Face Seal - **FG** : Female Metal Face Seal - **S** : S-LOK - **BW** : Tube Butt Weld	- **4** : 1/4" - **6** : 3/8" - **8** : 1/2" - **12** : 3/4"	- **BA** : BA - **EP** : EP	- **S6LS** : SS316L Single Melt - **S6LV** : SS316L Double Melt

Dimensions

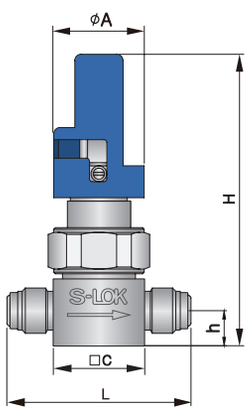

Male Metal Face Seal

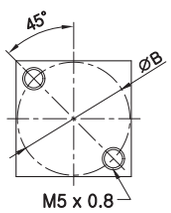

Bottom

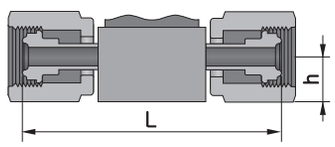

• Female Metal Face Seal

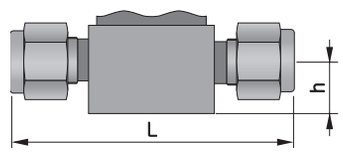

• S-LOK Tube Fititng

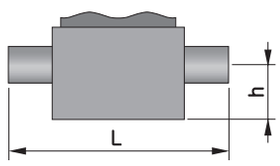

• Tube Butt Weld

Basic Ordering Number	End Connection	Demensions, mm					
		L	h	H	A	B	C
SSQDV-MG-4	Male MFS 1/4"	57	11	89.5	28.5	25.4	26
SSQDV-MG-8	Male MFS 1/2"	76.2	16	102.3	28.5	28	37
SSQDV-MG-12	Male MFS 3/4"	122	22	108.3	28.5	28	37
SSQDV-FG-4	Female MFS 1/4"	70.6	11	89.5	28.5	25.4	26
SSQDV-FG-8	Female MFS 1/2"	83	16	102.3	28.5	28	37
SSQDV-FG-12	Female MFS 3/4"	122	22	108.3	28.5	28	37
SSQDV-S-4	S-LOK 1/4"	69.5	11	89.5	28.5	25.4	26
SSQDV-S-6	S-LOK 3/8"	82.8	16	102.3	28.5	28	37
SSQDV-S-8	S-LOK 1/2"	90.9	16	102.3	28.5	28	37
SSQDV-S-12	S-LOK 3/4"	106	22	108.3	28.5	28	37
SSQDV-BW-4	Tube Butt Weld 1/4"	54	11	89.5	28.5	25.4	26
SSQDV-BW-6	Tube Butt Weld 3/8"	69	16	102.3	28.5	28	37
SSQDV-BW-8	Tube Butt Weld 1/2"	69	16	102.3	28.5	28	37
SSQDV-BW-12	Tube Butt Weld 3/4"	150	22	108.3	28.5	28	37

Bellows Valves

The best partner for value creation
We support the innovations of customers

08

Catalogue No. S-LOK Mar.2024

Features

- Compact Design, Manual bellows, Pneumatically actuated bellows
- Bellows Design for High Purity and long cycle life
- Handle with open/close indicator is standardized
- Panel and bottom mounting
- All Valves are factory tested with helium

Cleaning and Packaging

- All parts are free of emulsion composition and residuesinvolved in the machining process.
- Valves are assembled, inspected, tested and packaged in a CLASS 10-100 cleanroom.
- Double bag packaging is standard, and the inner bag contains ultra pure nitrogen.

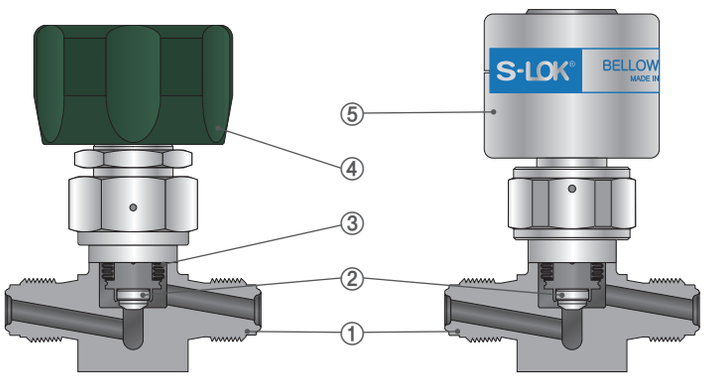

Meterials of Construction

No.	Component	Material
1	Body	316L Stainless Steel (Single / Double Melt)
2	Seat	PCTFE
3	Bellows	SS316
4	Handle	1/4" ~ 1/2" : HI100 3/4" : Aluminum
5	Actuator	Aluminum

Product Grade

Level	Inner Surface Roughness	
	Ra	Ry
EP	≤ 5 μ inch	≤ 0.7 μm
BA	≤ 10 μ inch	≤ 3.0 μm
AP	≤ 100 μ inch	≤ 25 μm

Chemical Composition

Element	Composition, Wt%									
	C	Si	Mn	P	S	Ni	Cr	Mo	Cu	Al
SS316L Singe Melt	≤ 0.03	≤ 0.75	≤ 0.8	≤ 0.04	≤ 0.005	12.0~16.0	16.0~18.0	2.0~3.0	≤ 0.5	-
SS316L Double Melt	≤ 0.01	≤ 0.3	≤ 0.4	≤ 0.03	≤ 0.003	14.5~15.0	16.5~17.0	2.2~2.5	≤ 0.25	≤ 0.01
SS316L VIM/VAR	≤ 0.01	≤ 0.2	≤ 0.05	≤ 0.02	≤ 0.003	14.5~15.0	16.5~17.0	2.2~2.5	≤ 0.2	≤ 0.01

Specifications

Size in.	Working Pressure Mpa (psig)	Temperature Rating ℃ (˚F)	Flow Coefficient (Cv)	Orifice mm (in.)	Across the Seat Helium Leak Rates	Inboard Helium Leak Rates	Particle Inspection (EP) (0.1 μm and Larger)
1/4			0.36	4.5(0.18)			
3/8, 1/2	1 (145)	-10 ~ 80	1.1	8(0.31)	≤ 4 x 10^{-9} atm cc/sec	≤ 4 x 10^{-9} atm cc/sec	No count Pressure: 60~80psi N2 Gas
3/4			2.6	12(0.47)			

Low Pressure Manual Bellows Valve - Square Body

Handle Position

OPEN

Ordering Information

SSBEV	-	MG	-	8	-	EP	-	S6LS
Valve Model		Connection Type		Connection Size		Product Grade		Body Material

Valve Model	Connection Type	Connection Size	Option	Product Grade	Body Material
- **SSBEV** : Low Pressure Manual Bellows Valve - Square Body	- **MG** : Male Metal Face Seal - **FG** : Female Metal Face Seal - **S** : S-LOK - **BW** : Tube Butt Weld	- **4** : 1/4" - **6** : 3/8" - **8** : 1/2" - **12** : 3/4"	- **LN** : Lock Nut	- **BA** : BA - **EP** : EP	- **S6LS** : SS316L Single Melt - **S6LV** : SS316L Double Melt

Dimensions

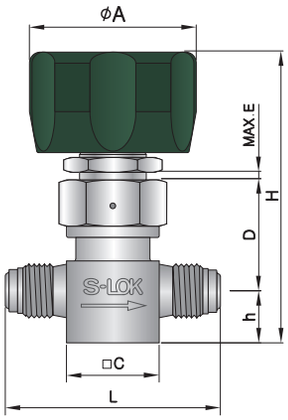

Male Metal Face Seal

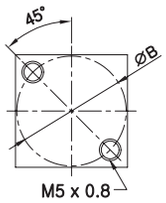

Bottom

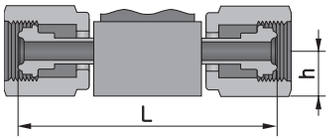

• Female Metal Face Seal

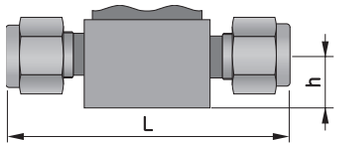

• S-LOK Tube Fititng

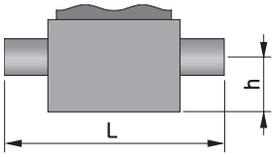

• Tube Butt Weld

Basic Ordering Number	End Connection	Demensions, mm							
		L	h	H	A	B	C	D	E
SSBEV-MG-4	Male MFS 1/4"	58	14	78.6	45	23	25	30.2	2
SSBEV-MG-8	Male MFS 1/2"	60	14	85.1	45	23	25	36.7	2
SSBEV-MG-12	Male MFS 3/4"	125	22	124	65	32	33	58	6
SSBEV-FG-4	Female MFS 1/4"	70.6	14	78.6	45	23	25	30.2	2
SSBEV-FG-8	Female MFS 1/2"	90	14	85.1	45	23	25	36.7	2
SSBEV-FG-12	Female MFS 3/4"	115	22	124	65	32	33	58	6
SSBEV-S-4	S-LOK 1/4"	64.6	14	78.6	45	23	25	30.2	2
SSBEV-S-6	S-LOK 3/8"	77.8	14	85.1	45	23	25	36.7	2
SSBEV-S-8	S-LOK 1/2"	83.3	14	85.1	45	23	25	36.7	2
SSBEV-S-12	S-LOK 3/4"	99.8	22	124	65	32	33	58	6
SSBEV-BW-4	Tube Butt Weld 1/4"	150	14	78.6	45	23	25	30.2	2
SSBEV-BW-6	Tube Butt Weld 3/8"	150	14	85.1	45	23	25	36.7	2
SSBEV-BW-8	Tube Butt Weld 1/2"	150	14	85.1	45	23	25	36.7	2
SSBEV-BW-12	Tube Butt Weld 3/4"	158	22	124	65	32	33	58	6

Low Pressure Pneumatic Bellows Valve - Square Body

Handle Position

NORMAL CLOSE

NORMAL OPEN

Ordering Information

SSPBEV	-	MG	-	8	-	EP	-	S6LS
Valve Model		Connection Type		Connection Size		Product Grade		Body Material

Valve Model	Connection Type	Connection Size	Actuation	Product Grade	Body Material
- **SSPBEV** : Low Pressure Pneumatic Bellows Valve	- **MG** : Male Metal Face Seal - **FG** : Female Metal Face Seal - **S** : S-LOK - **BW** : Tube Butt Weld	- **4** : 1/4" - **6** : 3/8" - **8** : 1/2" - **12** : 3/4"	- **NC** : Normally Closed - **NO** : Normally Open	- **BA** : BA - **EP** : EP	- **S6LS** : SS316L Single Melt - **S6LV** : SS316L Double Melt

Dimensions

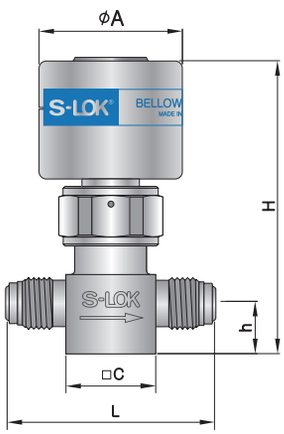

Male Metal Face Seal

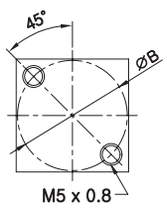

Bottom

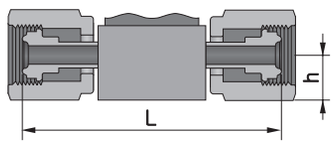

• Female Metal Face Seal

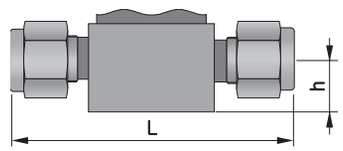

• S-LOK Tube Fititng

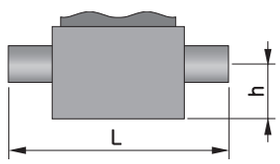

• Tube Butt Weld

Basic Ordering Number	End Connection	Demensions, mm					
		L	h	H	A	B	C
SSPBEV-MG-4	Male MFS 1/4"	58	14	82.3	40	23	25
SSPBEV-MG-8	Male MFS 1/2"	60	14	88.8	40	23	25
SSPBEV-FG-4	Female MFS 1/4"	70.6	14	82.3	40	23	25
SSPBEV-FG-8	Female MFS 1/2"	90	14	88.8	40	23	25
SSPBEV-S-4	S-LOK 1/4"	64.6	14	82.3	40	23	25
SSPBEV-S-6	S-LOK 3/8"	77.8	14	88.8	40	23	25
SSPBEV-S-8	S-LOK 1/2"	83.3	14	88.8	40	23	25
SSPBEV-BW-4	Tube Butt Weld 1/4"	150	14	82.3	40	23	25
SSPBEV-BW-6	Tube Butt Weld 3/8"	150	14	88.8	40	23	25
SSPBEV-BW-8	Tube Butt Weld 1/2"	150	14	88.8	40	23	25

Cryogenic Service Valves

The best partner for value creation
We support the innovations of customers

09

Catalogue No. S-LOK Mar.2024

Cryogenic Service Valves

S-LOK Cryogenic Valve is focused in high flow capacity, tight shutoff, energy efficiency and prolonged service-free life under extremely low temperatures and in the harshest environments. Due to the facts, a product, which is reliable, stable and safe to use, were developed for such necessary application.

Product Information

Design Standards

- ASME B 16.34 Valves-Flanged, Threaded, and Welding End.
- ASME B 16.5 Pipe Flanges and Flanged Fittings.
- ASME B 1.20.1 Pipe Threads, General Purpose.
- ASME B 16.25 Buttwelding Ends.
- BS 6364 Valves for Cryogenic Service.
- ISO 28921-1,2 Industrial valves - Isolating valves for low temperature applications.
- API 607 / BS 6755 part 2 Fire test for Quarter-turn Valves.

Construction & Features

- Bolted Extended Bonnet Design.
- Low Emission Design.
- Cavity Pressure Relief.
- Spring loaded packing Design.
- Fire Safe Design & Anti static Design.
- Flow direction & Position Indicate.
- Stainless Steel Lever or Hand Wheel.
- Available Double Block & Bleed Valves.
- Pressure rating up to Class 1500.
- Temperature rating Down to -196˚C (-327°F).
- Variety of End connections.

Applications

- Air Separation Plant
- Chemical Plant
- Petrochemical
- LNG Power Generation
- LNG Carrier / Transportation
- LNG Storage and Distribution

Cryogenic Test

Attach closed flange to both flanges of the valve, and connect thermocouple.
Fill the test valve up to the top of its bonnet joint flange with coolant medium.
Keep the valve in the liquefied nitrogen container at least 1 hour until the temperature of the valve body and bonnet are stabilized.
Perform the test of opening/closing a valve.
Completely close the valve and maintain it with test pressure by adjusting the gas regulator.
Maintain the pressurized state for 5 minutes and measure leakage with a measuring cylinder and record the result.

SCNV Series Cryogenic Needle Valves

Features

- Long extended bonnet, Low fugitive emission packing design
- Non rotating stem tip & Metal seat design.
- Pressure rating : ASME CLASS 150 to CLASS 600
- Temperature rating : Down to -327°F (-196°C).
- Variety of end connections include reliable S-LOK tube fittings, threaded ASME flange / butt weld / socket welds.
- Available size : 1/2" (DN-15) ~ 2″(DN-50).
- Dust cap with position indicator.

Materials of Construction

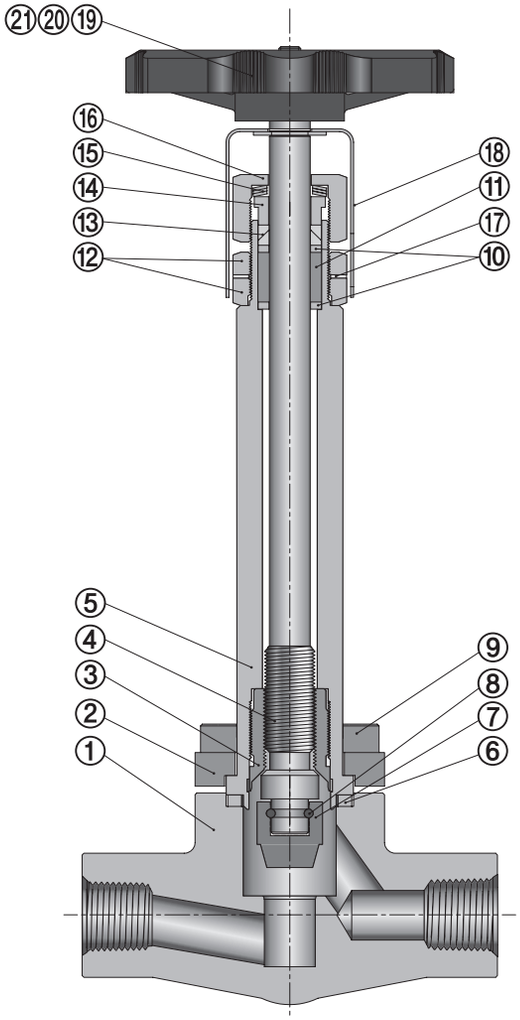

NO.	Description	Material Grade
1	Body	A182 F316L / A351 CF3M
2	Bonnet Cover	A351 CF3M
3	Insert	SS316L / A479 or A276
4	Stem	SS316L / A479 or A276
5	Bonnet	SS316L / A479 or A276
6	Spiral Wound Gasket	SS316L + GRAPHITE
7	Stem Tip	SS316L + STELLITE
8	Wire	Stainless Steel
9	Hex Socket Bolt	Stainless Steel
10	Packing Support Ring	SS316 / A479 or A276
11	VOC Packing	SS316L + GRAPHITE
12	Packing Gland	SS316 / A479 or A276
13	Lock Nut	SS316 / A479 or A276
14	Packing	PTFE
15	Disc Spring	Stainless Steel
16	Packing Nut	A193 B8M
17	Indicate Ring	NYLON
18	Indicate Cap	Stainless Steel
19	Hand Wheel	Stainless Steel
20	Name Plate	Stainless Steel
21	Hex Nut / Washer	Stainless Steel

Dimensions

Flange (Butt Weld) X Flange (Butt Weld)

Size (Inch)	Pressure Rating (Class)	Dimension (mm)		
		L	H	W
1/2	150	114	245	90
	300			
1	150	140	265	100
	300			

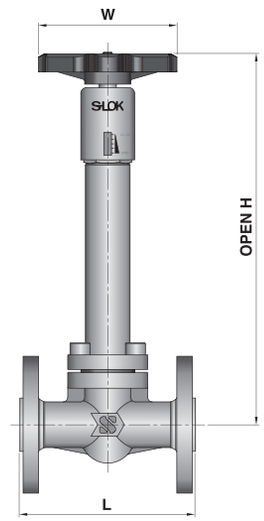

Flange X FNPT (Butt Weld)

Size (Inch)	Pressure Rating (Class)	Dimension (mm)		
		L	H	W
1/2	150	114	245	90
	300			
1	150	140	265	100
	300			

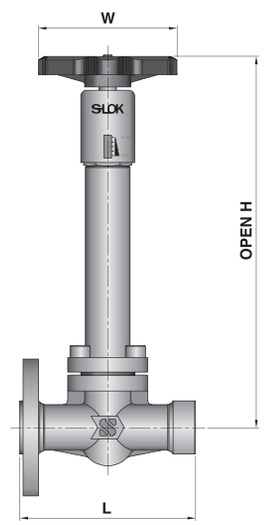

FNPT (Butt Weld) X FNPT (Butt Weld)

Size (Inch)	Pressure Rating (Class)	Dimension (mm)		
		L	H	W
1/2	150	114	245	90
	300			
	600			
1	150	140	265	100
	300			
	600			

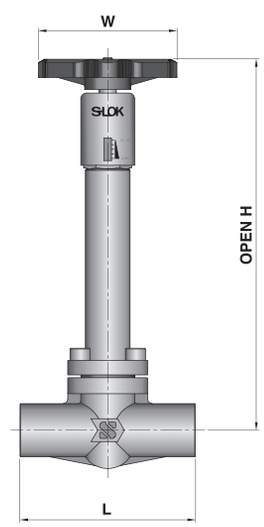

SCBV Series Cryogenic Ball Valves

Features

- Long extended bonnet, Low fugitive emission packing design.
- Anti-blowout stem & Anti static design.
- Super finished ball for low operating torque and long life.
- Pressure rating : ASME CLASS 150 to CLASS 2500
- Temperature rating : Down to -327°F (-196˚C).
- Variety of end connections include reliable S-LOK tube fittings, threaded ASME flange / butt weld / socket welds.
- Available size : 1/2” (DN-15) ~ 2″(DN-50).

Materials of Construction

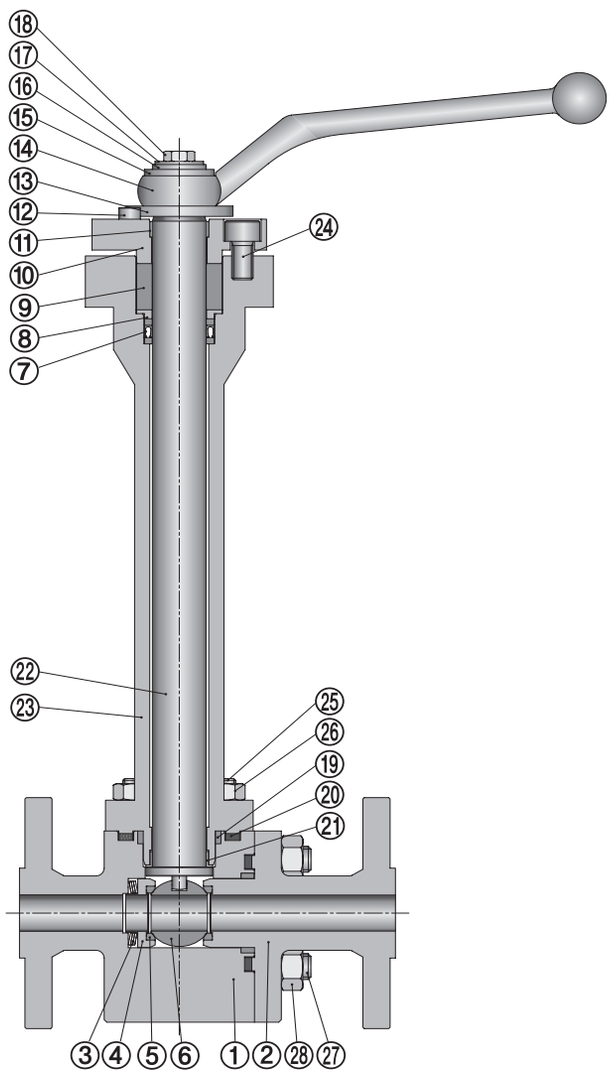

NO.	Description	Material Grade
1	Body	A182 F316/316L
2	Body Cap	A182 F316/316L
3	Disc Spring	Inconel X-750
4	Ball Seat Capsule	SS316 / A479 or A276
5	Ball Seat	PCTFE
6	Ball	SS316 / A479 or A276
7	Lip Seal	R.PTFE + ELGILOY
8	Support Ring	SS316 / A479 or A276
9	VOC Packing	Graphite + SS316
10	Packing Gland	A182 F316/316L
11	Stem Bearing	PEEK
12	Stop Pin	Stainless Steel
13	Lockng Device	Stainless Steel
14	Handle	Stainless Steel
15	Handle Idicate	Stainless Steel
16	Washer	Stainless Steel
17	Tooth Washer	Stainless Steel
18	Hex Bolt	Stainless Steel
19	Primary Seal	PTFE
20	Bonnet Seal	Graphite + SS316
21	Thrust Bearing	PEEK
22	Long Stem	SS316 / A479 or A276
23	Extended Bonnet	A182 F316/316L
24	Hex Socket Bolt	A193 B8M
25	Stud Bolt	A320 B8M CL.2
26	Hex Nut	A194 8MA
27	Stud Bolt	A320 B8M CL.2
28	Hex Nut	A194 8MA

Dimensions

Flange X Flange

Size (Inch)	Pressure Rating (Class)	Dimension (mm)		
		L	H	W
1/2	150	140	327	160
	300	140		
	600	165		
1	150	165	380	260
	300	165		
	600	216		

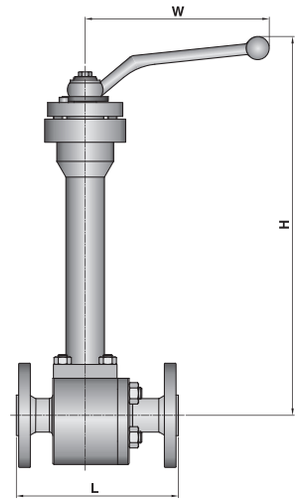

Flange X FNPT

Size (Inch)	Pressure Rating (Class)	Dimension (mm)		
		L	H	W
1/2	150	113	327	160
	300	130		
	600	152		
1	150	133	380	260
	300	152		
	600	196		

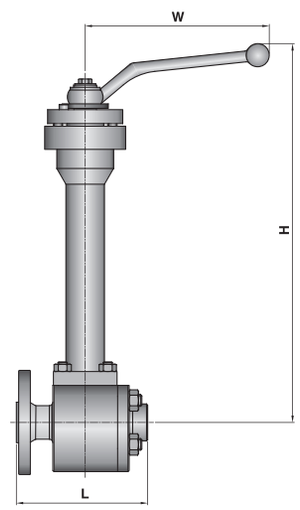

FNPT (Butt Weld) X FNPT (Butt Weld)

Size (Inch)	Pressure Rating (Class)	Dimension (mm)		
		L	H	W
1/2	150	108	327	160
	300	140		
	600	165		
1	150	127	380	260
	300	165		
	600	216		

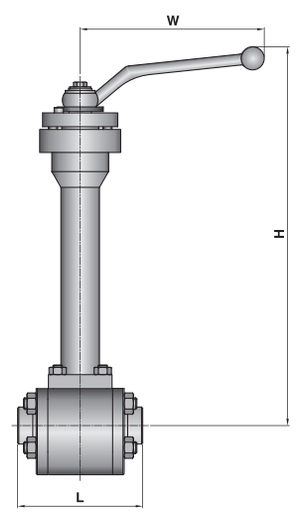

Ordering Information

SCB2F	14	R16	600	LT	S6L
(1)	(2)	(3)	(4)	(5)	(6)

SCNV1	F8N	150	LT	S6L
(1)	(3)	(4)	(5)	(6)

(1) Valve Series

SCB2F : 2-Piece Cryogenic Ball Valve
SCB3F : 3-Piece Cryogenic Ball Valve
SCNV1 : Cryogenic Needle Valve
SCNV2 : Cryogenic Needle Valve

(2) Bore Size (Ball Valve)

10 : 10mm
14 : 14mm
20 : 19mm
25 : 25mm

(3) Connection Detail (Type + Size)

R- : Raised Face
F- : Flat Face
J- : Ring Type Joint

BW- : Butt Weld
SW- : Socket Weld
PE- : Plain End
S- : S-LOK Tube Fitting

-P : Pipe
-T : Tube

M- : Male Thread
F- : Femal Thread

-N : NPT
-R : PT
-G : PF

8 : 1/2″ (DN-15)
12 : 3/4″ (DN-20)
16 : 1″ (DN-25)

(4) Class Rating

150 : CLASS 150
300 : CLASS 300
600 : CLASS 600
800 : CLASS 800
900 : CLASS 900
1500 : CLASS 1500
2500 : CLASS 2500

(5) Option

LT : Low Temperature Service (Down to -110˚C)
CY : Cryogenic Service (Down to -196˚C)
FS : Fire Safety
LD : Locking Device
SG : Sour Gas Service (NACE)

(6) Body Material

S6 : A182 F316/316L, A351 CF8M
S6L : A182 F316L, A351 CF3M
S4L : A182 F304L, A351 CF3
LF2 : A350 LF2 CL.1, A352 LCC

S-LOK®

Instrument Gate Valves

The best partner for value creation
We support the innovations of customers

10

Catalogue No. S-LOK Mar.2024

SGTV Series Gate Valves

Features

- Pressure rating up to 3600psig (248bar) at 21˚C (70˚F).
- Temperature rating from -54˚C (-65˚F) to 648˚C (1200˚F) with Graphite packing.
- Valve stem back seating against the bevelled edge of bonnet in fully open position prevents maximum leakage through bonnet when packing fails.
- Packing Bolt allows external packing adjustment.
- Packing under the stem threads is to isolate threads from system fluid and lubricant washout.
- Variety of end connections include reliable S-LOK tube fittings, male/female NPT & ISO threads.
- The hard faced seat ring and wedge enable longer life cycle & Low operating torques.
- Available Sour Gas service per NACE MR0175.

Materials of Construction

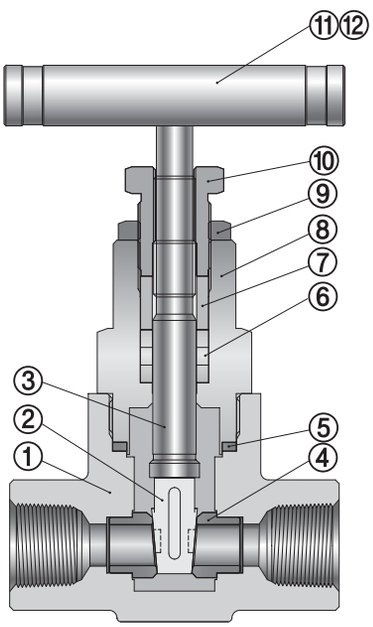

NO.	Description	Material Grade	
		Stainless Steel	Carbon Steel
1	Body	A182 F316	A105
2	Wedge	SS316 + STELLITE	
3	Stem	SS316 / A479 or A276	
4	Seat Ring	SS316 + STELLITE	
5	Bonnet Seal	GRAPHITE	
6	Packing	GRAPHITE	
7	Packing Gland	SS316 / A479 or A276	
8	Bonnet	SS316 / A479 or A276	A105
9	Lock Nut	SS316 / A479 or A276	
10	Packing Bolt	SS316 / A479 or A276	
11	Bar Handle	Stainless Steel	
12	Set Screw	Stainless Steel	

Technical Data

Temperature-Working Pressure

ASME Material Group	Table 2-2.2	Table 2-1.1
ASME Class Rating	1500	
Material Name	Stainless Steel 316	Carborn Steel A105
Temperature, ˚C (˚F)	Working Pressure, psig (bar)	
-54°C (-65°F) to 38˚C (100˚F)	3600 (248)	3705 (255)
93˚C (200˚F)	3095 (213)	3395 (234)
148˚C (300˚F)	2795 (192)	3270 (225)
204˚C (400˚F)	2570 (177)	3170 (218)
260˚C (500˚F)	2390 (164)	3015 (207)
315˚C (600˚F)	2255 (155)	2840 (195)

- Pressure ratings of valves with S-LOK end connections are determined by the tubing material and wall thickness.
- For more information about pressure ratings of valves with tube fitting end connections.
- Pressure rating of valve is sometimes limited to the working pressure of pipe ends and the tubing connected.

Ordering Information & Dimensions

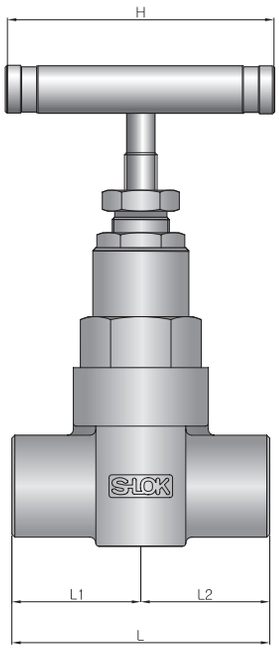

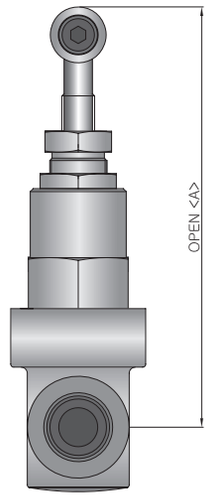

Ordering Number		Orifice (mm)	Cv	End Connections		Dimensions (mm)				
				Inlet	Outlet	L	L_1	L_2	A	H
SGTV1	F-6N	10	6.1	3/8″ Female NPT		86	43		140	88.9
	F-8N			1/2″ Female NPT		86	43			
	S-8T			1/2″ S-LOK		100	50			
	S-10T			3/4″ S-LOK		100	50			
	SF-8T8N			1/2″ S-LOK	1/2″ Female NPT	93	50	43		
	SW-6P			3/8″ Pipe Socket Weld		86	43			
	SW-8P			1/2″ Pipe Socket Weld		86	43			
SGTV2	F-8N	12.7	11.3	1/2″ Female NPT		100	50		170	114.3
	F-12N			3/4″ Female NPT		100	50			
	S-12T			3/4″ S-LOK		114	57			
	S-16T			1″ S-LOK		124	62			
	SF-12T12N			3/4″ S-LOK	3/4″ Female NPT	107	57	50		
	SW-8P			1/2″ Pipe Socket Weld		100	50			
	SW-12P			3/4″ Pipe Socket Weld		100	50			

* Dimensions are for reference only and are subject to change.

SGTV2	F	8N	SG	S6
Valve Series	Connection Type	Connection Sizev	Option	Body Material

- **Nil :** Standard
- **TE :** PTFE Packing
- **SG :** Sour Gas Service

- **S6 :** 316 Stainless Steel
- **CS :** A105

S-LOK®

Quick Connector

The best partner for value creation
We support the innovations of customer

01

Catalogue No. S-LOK Mar.2024

SQCT Series
Instrumentation Quick Connectors

Features

- Quick and easy operation
- Coupling and uncoupling without tools.
- The stems are connected to the body of the same series and size.
- When coupled, the valve opens automatically.
- When uncoupled, the valve automatically closes.
- Single-End Shut-off (SE) stems are open while separated from the body.
- Double-End Shut-off (DE) stems shut off while separated from the body.

Operation

- Coupling : After aligning the stem and body, push the stem into the body.
- Uncoupling : Pull the body sleeve toward stem and remove the stem from the body.
- Couple and uncouple the quick connectors at room temperature
- Relubricate stem seal O-rings periodically.

Single-End Shutoff (SE)

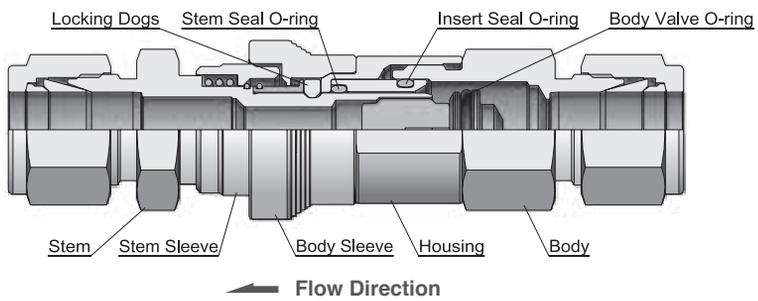

Double-End Shutoff (DE)

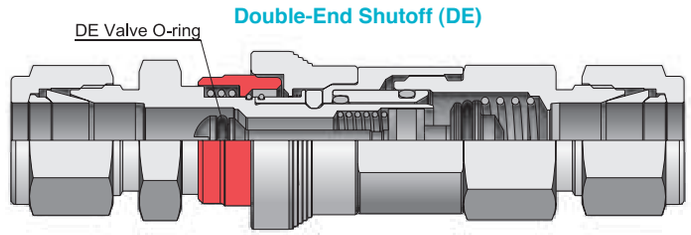

Materials of Construction

Component	Material	
	Stainless Steel 316	Brass
Body, Body insert, Housing, Body sleeve, Stem, Valve	SS 316	Brass
DE stem sleeve	Polyurethane Enamel coated SS 316	Polyurethane Enamel coated Brass
SE stem sleeve	SS 316	Brass
O-ring	FKM	NBR
Locking dogs	PTFE coated powered SS316	
Springs	Stainless steel	
Snap rings	Stainless steel	

Technical Data

Spillage, Air Inclusionand Maximum Flow Rate at 70°F (20°F)

- Spillage is the amount of system fluid that escapes when a quick connector is uncoupled (DE only).
- Air inclusion is the amount of air trapped between the body and stem that enters the system when a quick connector is coupled (DE only).

Series	Spillage, cm^3	Air Inclusion, cm^3	Water Flow, L/min
SQCT1	0.3	0.3	15
SQCT2	1.0	1.0	22
SQCT3	3.0	3.0	37

Pressure - Temperature Ratings

Ratings are limited depending on the material.
SS316 bodies and DE stems are standard with FKM O-ring.
Brass bodies and DE stems are standard with NBR O-ring.

Material	Stainless Steel 316			Brass		
Series	SQCT1	SQCT2	SQCT3	SQCT1	SQCT2	SQCT3
Temperature, °F (°C)	Pressure Rating, psig (bar)					
Coupled						
70 (20)	3000 (206)	1500 (103)	750 (51.6)	2000 (137)	1000 (68.9)	500 (34.4)
250 (121)	1850 (127)	970 (66.8)	520 (35.8)	300 (20.6)	300 (20.6)	300 (20.6)
300 (148)	1400 (96.4)	750 (51.6)	440 (30.3)	-	-	-
400 (204)	500 (34.4)	400 (27.5)	300 (20.6)	-	-	-
Uncoupled and When Coupling and Uncoupling						
70 (20)	250 (17.2)					

O-ring Material & Temperature Ratings

Material	Temperature Rating, °F (°C)
FKM	10 (-12) to 400 (204)
EPDM	-50 (-45) to 300 (148)
FFKM	60 (15) to 500 (260)
NBR	0 (-17) to 250 (121)

Maximum Flow Rate @ 70°F (20°C)

Series	Water Flow, U.S. gal/min (L/min)
SQCT1	4 (15)
SQCT2	6 (22)
SQCT3	10 (37)

Ordering Information and Dimension – SQCT Series

SQCT3S	-	S	-	8	-	DE	-	KA	-	S6
Stem Series		End Connection		Connection Size		Stem Type		O-ring Material		Body Material

- **Stem Type**
  - **SE** : Single-end shutoff
  - **DE** : Double-end shutoff
- **O-ring material & Designator**
  - **VT** : FKM (Standard for SS316 body)
  - **NBR** : NBR (Standard for brass body)
  - **EP** : EPDM
  - **KA** : FFKM
- **Body Material**
  - **S6** : 316 Stainless Steel
  - **BS** : Brass

Stems

S-LOK Tube Fitting

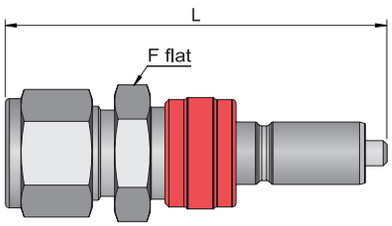

Single-End Shut-off (SE)

Ordering Numbers	Fitting Size	Cv		Dimensions	
		SE	Full Flow	L , in. (mm)	F , inch
SQCT1S-S-2T-SE	1/8"	0.08	0.08	2.32 (58.9)	5/8
SQCT1S-S-4T-SE	1/4"	0.3	0.4	2.36 (59.9)	5/8
SQCT2S-S-6T-SE	3/8"	1.0	1.5	2.52 (64.0)	3/4
SQCT3S-S-8T-SE	1/2"	2.4	3.3	2.96 (75.2)	15/16
SQCT1S-S-6M-SE	6mm	0.3	0.4	2.36 (59.9)	5/8
SQCT2S-S-10M-SE	10mm	1.0	1.5	2.65 (67.3)	3/4
SQCT3S-S-12M-SE	12mm	2.4	3.3	2.96 (75.2)	15/16

Double-End Shut-off (DE)

Ordering Numbers	Fitting Size	Cv	Dimensions	
			L , in. (mm)	F , inch
SQCT1S-S-2T-DE	1/8	0.08	2.77 (70.4)	5/8
SQCT1S-S-4T-DE	1/4	0.2	2.42 (61.5)	5/8
SQCT2S-S-6T-DE	3/8	0.5	2.64 (67.1)	3/4
SQCT3S-S-8T-DE	1/2	1.5	3.16 (80.3)	15/16
SQCT1S-S-6M-DE	6mm	0.2	2.42 (61.5)	5/8
SQCT2S-S-10M-DE	10mm	0.5	2.77 (70.4)	3/4
SQCT3S-S-12M-DE	12mm	1.5	3.16 (80.3)	15/16

Male Pipe Threads

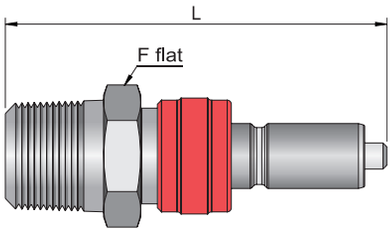

Single-End Shut-off (SE)

Ordering Numbers	Pipe Thread	Cv		Dimensions	
		SE	Full Flow	L , in. (mm)	F , inch
SQCT1S-M-2N-SE	1/8"NPT	0.3	0.4	2.07 (52.6)	5/8
SQCT1S-M-4N-SE	1/4"NPT	0.3	0.4	2.22 (56.4)	5/8
SQCT2S-M-4N-SE	1/4"NPT	0.9	1.5	2.32 (58.9)	3/4
SQCT2S-M-6N-SE	3/8"NPT	0.8	1.6	2.35 (59.7)	3/4
SQCT3S-M-8N-SE	1/2"NPT	2.0	3.1	2.84 (72.1)	15/16
SQCT1S-M-4R-SE	1/4"PT	0.3	0.4	2.22 (56.4)	5/8
SQCT2S-M-6R-SE	3/8"PT	0.8	1.6	2.35 (59.7)	3/4
SQCT3S-M-8R-SE	1/2"PT	2.0	3.1	2.84 (72.1)	15/16

Double-End Shut-off (DE)

Ordering Numbers	Pipe Thread	Cv	Dimensions	
			L , in. (mm)	F , inch
SQCT1S-M-2N-DE	1/8"NPT	0.2	2.13 (54.1)	5/8
SQCT1S-M-4N-DE	1/4"NPT	0.2	2.28 (57.9)	5/8
SQCT2S-M-4N-DE	1/4"NPT	0.5	2.44 (61.9)	3/4
SQCT2S-M-6N-DE	3/8"NPT	0.5	2.47 (62.7)	3/4
SQCT3S-M-8N-DE	1/2"NPT	1.3	3.04 (77.2)	15/16
SQCT1S-M-4R-DE	1/4"PT	0.2	2.28 (57.9)	5/8
SQCT2S-M-6R-DE	3/8"PT	0.5	2.47 (62.7)	3/4
SQCT3S-M-8R-DE	1/2"PT	1.3	3.04 (77.2)	15/16

Female Pipe Threads

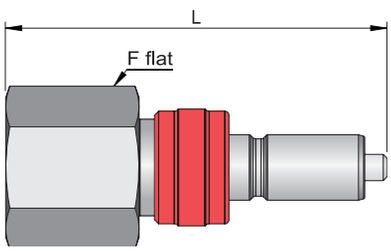

Single-End Shut-off (SE)

Ordering Numbers	Pipe Thread	Cv		Dimensions	
		SE	Full Flow	L , in. (mm)	F , inch
SQCT1S-F-2N-SE	1/8"NPT	0.3	0.4	2.01 (51.1)	5/8
SQCT1S-F-4N-SE	1/4"NPT	0.3	0.4	2.26 (57.4)	3/4
SQCT2S-F-4N-SE	1/4"NPT	0.9	1.5	2.35 (59.7)	3/4
SQCT2S-F-6N-SE	3/8"NPT	0.8	1.6	2.35 (59.7)	7/8
SQCT3S-F-8N-SE	1/2"NPT	2.0	3.1	2.82 (71.6)	1-1/16
SQCT1S-F-4R-SE	1/4"PT	0.3	0.4	2.26 (57.4)	3/4
SQCT2S-F-6R-SE	3/8"PT	0.8	1.6	2.35 (59.7)	7/8
SQCT3S-F-8R-SE	1/2"PT	2.0	3.1	2.82 (71.6)	1-1/16

Double-End Shut-off (DE)

Ordering Numbers	Pipe Thread	Cv	Dimensions	
			L , in. (mm)	F , inch
SQCT1S-F-2N-DE	1/8"NPT	0.2	2.07 (52.6)	5/8
SQCT1S-F-4N-DE	1/4"NPT	0.2	2.32 (58.9)	3/4
SQCT2S-F-4N-DE	1/4"NPT	0.5	2.47 (62.7)	3/4
SQCT2S-F-6N-DE	3/8"NPT	0.5	2.47 (62.7)	7/8
SQCT3S-F-8N-DE	1/2"NPT	1.3	3.02 (76.7)	1-1/16
SQCT1S-F-4R-DE	1/4"PT	0.2	2.32 (58.9)	3/4
SQCT2S-F-6R-DE	3/8"PT	0.5	2.47 (62.7)	7/8
SQCT3S-F-8R-DE	1/2"PT	1.3	3.02 (76.7)	1-1/16

Ordering Information and Dimension – SQCT Series

SQCT3B	-	S	-	8T	-	KA	-	S6
Body Series		End Connection		Connection Size		O-ring Material		Body Material

• **O-ring Material**
- **VT** : FKM (Standard for SS316 body)
- **NBR** : NBR (Standard for brass body)
- **EP** : EPDM
- **KA** : FFKM

• **Body Material**
- **S6** : 316 Stainless Steel
- **BS** : Brass

Bodies

S-LOK Tube Fitting

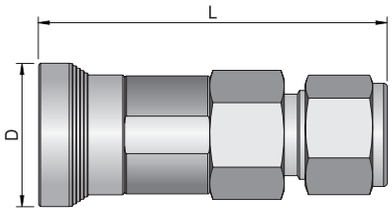

Ordering Numbers	Fitting Size	Dimensions, inch (mm)	
		L	D
SQCT1B-S-2T	1/8"	2.26 (57.4)	0.91 (23.1)
SQCT1B-S-4T	1/4"	2.30 (58.4)	0.91 (23.1)
SQCT2B-S-6T	3/8"	2.58 (65.5)	1.03 (26.2)
SQCT3B-S-8T	1/2"	3.09 (78.5)	1.21 (30.7)
SQCT1B-S-6M	6mm	2.30 (58.4)	0.91 (23.1)
SQCT2B-S-10M	10mm	2.68 (68.1)	1.03 (26.2)
SQCT3B-S-12M	12mm	3.09 (78.5)	1.21 (30.7)

Male Pipe Threads

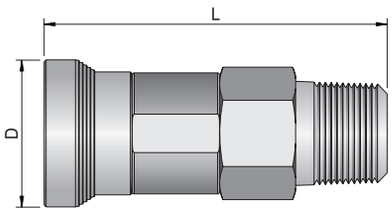

Ordering Numbers	Pipe Thread	Dimensions, inch (mm)	
		L	D
SQCT1B-M-2N	1/8" NPT	2.01 (51.1)	0.91 (23.1)
SQCT1B-M-4N	1/4" NPT	2.16 (54.9)	0.91 (23.1)
SQCT2B-M-4N	1/4" NPT	2.38 (60.5)	1.03 (26.2)
SQCT2B-M-6N	3/8" NPT	2.38 (60.5)	1.03 (26.2)
SQCT3B-M-8N	1/2" NPT	2.97 (75.4)	1.21 (30.7)
SQCT1B-M-4R	1/4" PT	2.16 (54.9)	0.91 (23.1)
SQCT2B-M-6R	3/8" PT	2.38 (60.5)	1.03 (26.2)
SQCT3B-M-8R	1/2" PT	2.97 (75.4)	1.21 (30.)

Female Pipe Threads

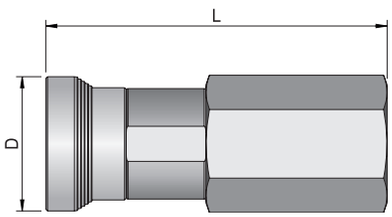

Ordering Numbers	Pipe Thread	Dimensions, inch (mm)	
		L	D
SQCT1B-F-2N	1/8" NPT	2.16 (54.9)	0.91 (23.1)
SQCT1B-F-4N	1/4" NPT	2.42 (61.5)	0.91 (23.1)
SQCT2B-F-4N	1/4" NPT	2.54 (64.5)	1.03 (26.2)
SQCT2B-F-6N	3/8" NPT	2.57 (65.3)	1.03 (26.2)
SQCT3B-F-8N	1/2" NPT	3.22 (81.8)	1.21 (30.7)
SQCT1B-F-4R	1/4" PT	2.42 (61.5)	0.91 (23.1)
SQCT2B-F-6R	3/8" PT	2.57 (65.3)	1.03 (26.2)
SQCT3B-F-8R	1/2" PT	3.22 (81.8)	1.21 (30.)

Ordering Information and Dimension – SQCT Series

Bulkhead Stems

S-LOK Tube Fitting

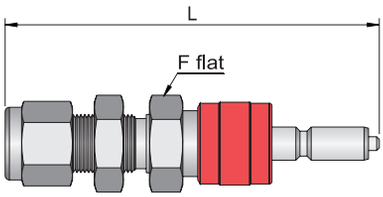

Single-End Shut-off (SE)

Ordering Numbers	Fitting Size	Dimensions, inch (mm)			
		L	F	Max. Panel Thickness	Min. Panel Hole Dia.
SQCT1S-BH-S-4T-SE	1/4"	2.74 (69.6)	5/8 (15.8)	0.25 (6.4)	15/32 (11.9)
SQCT2S-BH-S-6T-SE	3/8"	2.92 (74.2)	3/4 (19.0)	0.27 (6.9)	19/32 (15.1)
SQCT3S-BH-S-8T-SE	1/2"	3.43 (87.1)	15/16 (23.8)	0.26 (6.6)	25/32 (19.8)
SQCT1S-BH-S-6M-SE	6mm	2.74 (69.6)	5/8 (15.8)	0.25 (6.4)	15/32 (11.9)
SQCT2S-BH-S-10M-SE	10mm	3.06 (77.7)	3/4 (19.0)	0.27 (6.9)	21/32 (16.7)
SQCT3S-BH-S-12M-SE	12mm	3.43 (87.1)	15/16 (23.8)	0.26 (6.6)	49/64 (19.6)

Double-End Shut-off (DE)

Ordering Numbers	Fitting Size	Dimensions, inch (mm)			
		L	F	Max. Panel Thickness	Min. Panel Hole Dia.
SQCT1S-BH-S-4T-DE	1/4"	2.80 (71.1)	5/8 (15.8)	0.25 (6.4)	15/32 (11.9)
SQCT2S-BH-S-6T-DE	3/8"	3.07 (78.0)	3/4 (19.0)	0.27 (6.9)	19/32 (15.1)
SQCT3S-BH-S-8T-DE	1/2"	3.63 (92.2)	15/16 (23.8)	0.26 (6.6)	25/32 (19.8)
SQCT1S-BH-S-6M-DE	6mm	2.80 (71.1)	5/8 (15.8)	0.25 (6.4)	15/32 (11.9)
SQCT2S-BH-S-10M-DE	10mm	3.10 (78.7)	3/4 (19.0)	0.27 (6.9)	21/32 (16.7)
SQCT3S-BH-S-12M-DE	12mm	3.63 (92.2)	15/16 (23.8)	0.26 (6.6)	49/64 (19.6)

Bulkhead Bodies

S-LOK Tube Fitting

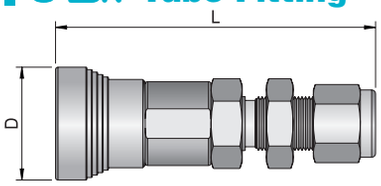

Ordering Numbers	Fitting Size	Dimensions, inch (mm)			
		L	D	Max. Panel Thickness	Min. Panel Hole Dia.
SQCT1B-BH-S-4T	1/4"	2.67 (67.8)	0.91 (23.1)	0.25 (6.4)	15/32 (11.9)
SQCT2B-BH-S-6T	3/8"	2.98 (75.7)	1.03 (26.2)	0.27 (6.9)	19/32 (15.1)
SQCT3B-BH-S-8T	1/2"	3.56 (90.4)	1.21 (30.7)	0.26 (6.6)	25/32 (19.8)
SQCT1B-BH-S-6M	6mm	2.67 (67.8)	0.91 (23.1)	0.25 (6.4)	15/32 (11.9)
SQCT2B-BH-S-10M	10mm	2.99 (75.9)	1.03 (26.2)	0.27 (6.9)	21/32 (16.7)
SQCT3B-BH-S-12M	12mm	3.56 (90.4)	1.21 (30.7)	0.26 (6.6)	49/64 (19.6)

Full-flow Quick Connectors

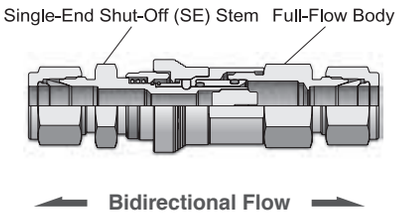

- SQCT Series full-flow quick connector consists of a single-end shut-off (SE) stem and full-flow body.
- Full-flow quick connectors are not automatically shutoff, must be depressurized prior to disconnection.
- To order a full-flow body, select ordering number and add F to the body series designator.
  EX) SQCT3BF-M-8N-S6

Options – SQCT Series

Keyed Quick Connector

- Keyed quick connectors prevent accidental mixing of other lines in a system using multiple liquids or pressures.
- When coupling unlike keyed quick connector, it is not coupled.
- Stem and bodies are categorized by color and number so that they can be easily identified.
- To order, add a key number to quick connector ordering number.
  EX) Stem : SQCT1S-S-4T-DE-K2-S6
  Body : SQCT3B-F-8N-K4-S6

Key Color	Key Number	Keyed Sleeve Outside Diameter, inch (mm)					
		SQCT1		SQCT2		SQCT3	
		Body	Stem	Body	Stem	Body	Stem
Black	K1	0.96 (24.4)	0.82 (20.8)	1.13 (28.7)	0.99 (25.1)	1.26 (32.0)	1.10 (27.9)
Orange	K2	0.99 (25.1)	0.85 (21.6)	1.16 (29.5)	1.02 (25.9)	1.29 (32.8)	1.14 (29.0)
Green	K3	1.02 (25.9)	0.88 (22.4)	1.19 (30.2)	1.05 (26.7)	1.32 (33.5)	1.17 (29.7)
Yellow	K4	1.05 (26.7)	0.91 (23.1)	1.22 (31.0)	1.08 (27.4)	1.35 (34.3)	1.20 (30.5)
Blue	K5	1.08 (27.4)	0.94 (23.9)	1.24 (31.5)	1.11 (28.2)	1.38 (35.1)	1.23 (31.2)
White	K6	1.11 (28.2)	0.97 (24.6)	1.28 (32.5)	1.14 (29.0)	1.41 (35.8)	1.26 (32.0)
Purple	K7	1.14 (29.0)	1.00 (25.4)	1.31 (33.3)	1.17 (29.7)	1.44 (36.6)	1.29 (32.8)
Brown	K8	1.17 (29.7)	1.03 (26.2)	1.34 (34.0)	1.20 (30.5)	1.47 (37.3)	1.32 (33.5)

Stem and Body Protector

- Stem and body protectors protect uncoupled bodies and stems from damage and contaminants.
- Protectors are not pressure containing devices.
- Protectors include stainless steel lanyard and lanyard clamp.
- To order, select ordering number and add body designator.
  EX) SQCT1S-P-S6
- Stem and body protectors material & Designator
  - SS316 : S6
  - Brass : BS
- To order a keyed protector, add a key number to protector ordering number.
  EX) SQCT2B-P-K2-S6

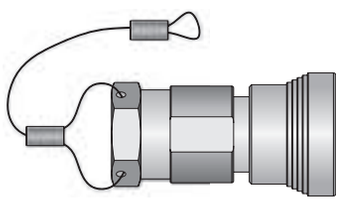

Stem Protector

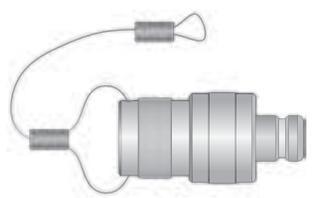

Body Protector

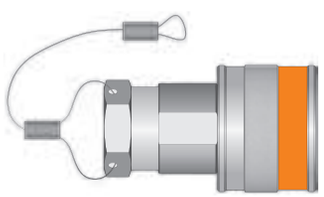

Keyed Stem Protector

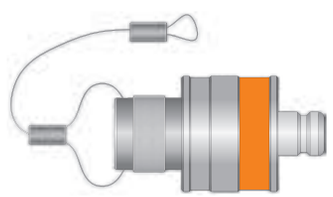

Keyed Body Protector

Series	Ordering Number	
	Stem Protector	Body Protector
SQCT1	SQCT1S-P	SQCT1B-P
SQCT2	SQCT2S-P	SQCT2B-P
SQCT3	SQCT3S-P	SQCT3B-P

Full Flow Quick Connectors - SQF Series

Features

- Quick and easy operation
- Coupling and uncoupling without tools.
- Provides full flow without orifice restrictions.
- O-ring is easily replaceable.

Operation

- Coupling
- After aligning the stem and body, pull back the body sleeve.
- Push the stem into the body.
- Slide the sleeve forward to return it to its original position.
- Uncoupling
- Pull back the body sleeve
- remove the stem from the body.
- Must be depressurized prior to uncoupling.
- Relubricate stem seal O-rings periodically.

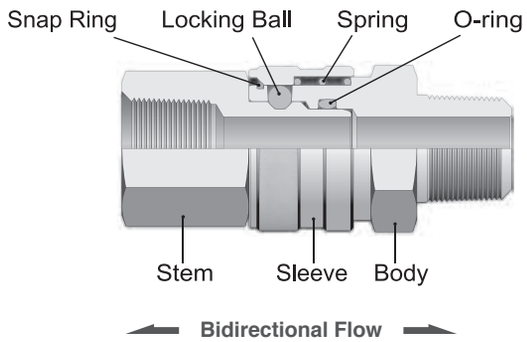

Materials of Construction

Component	Material	
	SS 316	Brass
Body	SS 316	Brass
Stem	SS 316	Brass
Sleeve	SS 316	Brass
O-ring	FKM	NBR
Spring	SS 304	
Snap ring	SS 304	
Locking ball	Stainless Steel	

Pressure – Temperature Ratings

Ratings are limited depending on the material and end connections.
SS316 bodies are standard with FKM O-ring.
Brass bodies are standard with NBR O-ring.

Material	SS 316		Brass		
Series	SQF1 & 2	SQF3 & 4	SQF1	SQF2	SQF3 & 4
Temperature °F (°C)	Pressure Rating, psig (bar)				
Coupled					
100 (37)	6000 (413)	4000 (275)	4000 (275)	3000 (206)	2000 (137)
150 (65)	5000 (344)	3500 (241)	2700 (186)	2000 (137)	1300 (89.5)
200 (93)	4000 (275)	2800 (192)	1400 (96.4)	1000 (68.9)	700 (48.2)
250 (121)	3000 (206)	2100 (144)	300 (20.6)	300 (20.6)	200 (13.7)
300 (148)	2000 (137)	1400 (96.4)	-	-	-
350 (176)	1200 (82.6)	800 (55.1)	-	-	-
400 (204)	400 (27.5)	200 (13.7)	-	-	-

Material	Temperature Rating , °F (°C)
FKM	10 (-12) to 400 (204)
EPDM	-50 (-45) to 300°F (148)
FFKM	40 (4) to 500 (260)
NBR	0 (-17) to 250°F (121)

Ordering Information and Dimension – SQF Series

• Brass body material, replace S6 with BS

SQF1S	-	S	-	4T	-	S6
Stem Series		End Connection		Connection Size		Body Material

Stems

S-LOK Tube Fitting

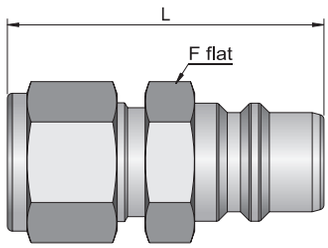

Ordering Numbers	Fitting Size	Cv	Dimensions		
			L, in. (mm)	F, inch	Min. Orifice in. (mm)
SQF1S-S-4T	1/4"	2.2	1.77 (45.0)	9/16	0.19 (4.8)
SQF1S-S-6T	3/8"	2.8	1.77 (45.0)	11/16	0.24 (6.1)
SQF2S-S-6T	3/8"	2.9	1.88 (47.8)	7/8	0.28 (7.1)
SQF2S-S-8T	1/2"	13	1.99 (50.5)	7/8	0.41 (10.4)
SQF3S-S-12T	3/4"	26	2.15 (54.6)	1-1/16	0.62 (15.7)
SQF4S-S-16T	1"	45	2.45 (62.2)	1-3/8	0.88 (22.4)
SQF1S-S-6M	6mm	2.2	1.77 (45.0)	9/16	0.19 (4.8)

Male Pipe Threads

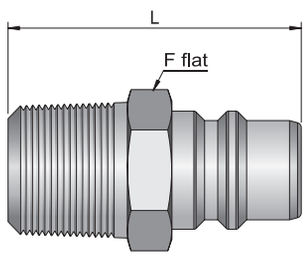

Ordering Numbers	Pipe Thread	Cv	Dimensions		
			L, in. (mm)	F, inch	Min. Orifice in. (mm)
SQF1S-M-4N	1/4"NPT	1.7	1.59 (40.4)	9/16	0.24 (6.1)
SQF1S-M-6N	3/8"NPT	1.7	1.59 (40.4)	11/16	0.24 (6.1)
SQF2S-M-6N	3/8"NPT	7.1	1.65 (41.9)	7/8	0.41 (10.4)
SQF2S-M-8N	1/2"NPT	11.5	1.84 (46.7)	7/8	0.50 (12.7)
SQF3S-M-12N	3/4"NPT	23.6	2.03 (51.6)	1-1/16	0.72 (18.3)
SQF4S-M-16N	1"NPT	39	2.35 (59.7)	1-3/8	0.88 (22.4)
SQF1S-M-4R	1/4"PT	1.7	1.59 (40.4)	9/16	0.24 (6.1)
SQF2S-M-8R	1/2"PT	11.5	1.84 (46.7)	7/8	0.50 (12.7)
SQF4S-M-16R	1"PT	39	2.35 (59.7)	1-3/8	0.88 (22.4)
SQF1S-M-4G	1/4"PF	1.7	1.60 (40.6)	3/4	0.24 (6.1)
SQF2S-M-8G	1/2"PF	11.5	1.82 (46.2)	1-1/16	0.50 (12.7)

Female Pipe Threads

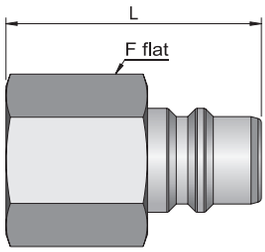

Ordering Numbers	Pipe Thread	Cv	Dimensions		
			L, in. (mm)	F, inch	Min. Orifice in. (mm)
SQF1S-F-4N	1/4"NPT	1.7	1.60 (40.6)	3/4	0.24 (6.1)
SQF1S-F-6N	3/8"NPT	1.7	1.67 (42.4)	7/8	0.24 (6.1)
SQF2S-F-6N	3/8"NPT	7.1	1.59 (40.4)	1-1/16	0.47 (11.9)
SQF2S-F-8N	1/2"NPT	11.5	1.82 (46.2)	1-1/16	0.50 (12.7)
SQF3S-F-12N	3/4"NPT	23.6	2.08 (52.8)	1-5/16	0.72 (18.3)
SQF4S-F-16N	1"NPT	39	2.49 (63.2)	1-5/8	0.88 (22.4)
SQF1S-F-4R	1/4"PT	1.7	1.60 (40.6)	3/4	0.24 (6.1)
SQF2S-F-8R	1/2"PT	11.5	1.82 (46.2)	1-1/16	0.50 (12.7)
SQF1S-F-4G	1/4"PF	1.7	1.60 (40.6)	3/4	0.24 (6.1)
SQF2S-F-8G	1/2"PF	11.5	1.82 (46.2)	1-1/16	0.50 (12.7)

Ordering Information and Dimension – SQF Series

SQF2B	-	M	-	8N	-	EP	-	S6
Body Series		End Connection		Connection Size		O-ring Material		Body Material

• **O-ring material & Designator**
- **VT** : FKM (Standard for SS316 body)
- **NBR** : NBR (Standard for brass body)
- **EP** : EPDM
- **KA** : FFKM

• **Body Material**
- **S6** : 316 Stainless Steel
- **BS** : Brass

Bodies

S-LOK Tube Fitting

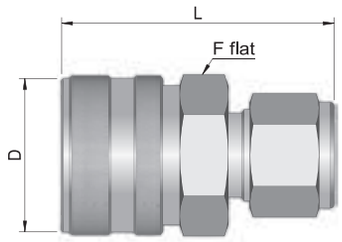

Ordering Numbers	Fitting Size	Dimensions			
		L, in. (mm)	F, inch	D, in. (mm)	Min. Orifice in. (mm)
SQF1B-S-4T	1/4"	1.80 (45.7)	11/ 16	0.87 (22.1)	0.19 (4.8)
SQF1B-S-6T	3/8"	1.81 (46.0)	11/16	0.87 (22.1)	0.28 (7.1)
SQF2B-S-6T	3/8"	2.17 (55.1)	1-1/16	1.30 (33.0)	0.28 (7.1)
SQF2B-S-8T	1/2"	2.23 (56.6)	1-1/16	1.30 (33.0)	0.41 (10.4)
SQF3B-S-12T	3/4"	2.45 (62.2)	1-1/2	1.66 (42.2)	0.62 (15.7)
SQF4B-S-16T	1"	2.75 (69.9)	1-11/16	1.88 (47.8)	0.88 (22.4)
SQF1B-S-6M	6mm	1.80 (45.7)	11/16	0.87 (22.1)	0.19 (4.8)

Male Pipe Threads

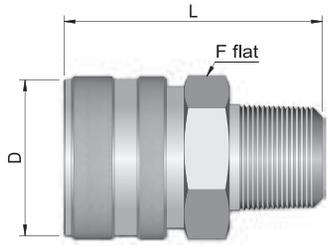

Ordering Numbers	Pipe Thread	Dimensions			
		L, in. (mm)	F, inch	D, in. (mm)	Min. Orifice in. (mm)
SQF1B-M-4N	1/4"NPT	1.57 (39.9)	11/16	0.87 (22.1)	0.25 (6.4)
SQF1B-M-6N	3/8"NPT	1.57 (39.9)	11/16	0.87 (22.1)	0.37 (9.4)
SQF2B-M-6N	3/8"NPT	1.83 (48.8)	1-1/16	1.30 (33.0)	0.41 (10.4)
SQF2B-M-8N	1/2"NPT	2.08 (52.8)	1-1/16	1.30 (33.0)	0.50 (12.7)
SQF3B-M-12N	3/4"NPT	2.33 (59.2)	1-1/2	1.66 (42.2)	0.72 (18.3)
SQF4B-M-16N	1"NPT	2.65 (67.3)	1-11/16	1.88 (47.8)	0.88 (22.4)
SQF1B-M-4R	1/4"PT	1.57 (39.9)	11/16	0.87 (22.1)	0.24 (6.1)
SQF2B-M-8R	1/2"PT	2.08 (52.8)	1-1/16	1.30 (33.0)	0.50 (12.7)
SQF4B-M-16R	1"PT	2.65 (67.3)	1-11/16	1.88 (47.8)	0.88 (22.4)
SQF1B-M-4G	1/4"PF	1.80 (45.7)	3/4	0.87 (22.1)	0.24 (6.1)
SQF2B-M-8G	1/2"PF	2.08 (52.8)	1-1/16	1.30 (33.0)	0.47 (11.9)

Female Pipe Threads

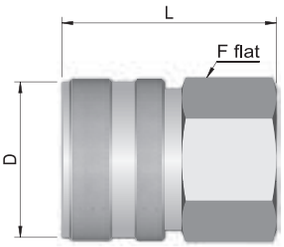

Ordering Numbers	Pipe Thread	Dimensions			
		L, in. (mm)	F, inch	D, in. (mm)	Min. Orifice in. (mm)
SQF1B-F-4N	1/4"NPT	1.50 (38.1)	3/4	0.87 (22.1)	0.38 (9.7)
SQF1B-F-6N	3/8"NPT	1.63 (41.4)	7/8	0.87 (22.1)	0.38 (9.7)
SQF2B-F-6N	3/8"NPT	1.73 (43.9)	1-1/16	1.30 (33.0)	0.59 (15.0)
SQF2B-F-8N	1/2"NPT	1.73 (43.9)	1-1/16	1.30 (33.0)	0.63 (16.0)
SQF3B-F-12N	3/4"NPT	1.89 (48.0)	1-1/2	1.66 (42.2)	0.88 (22.4)
SQF4B-F-16N	1"NPT	2.12 (53.8)	1-11/16	1.88 (47.8)	1.06 (26.9)
SQF1B-F-4R	1/4"PT	1.50 (38.1)	3/4	0.87 (22.1)	0.38 (9.7)
SQF2B-F-8R	1/2"PT	1.73 (43.9)	1-1/16	1.30 (33.0)	0.63 (16.0)
SQF1B-F-4G	1/4"PF	1.50 (38.1)	3/4	0.87 (22.1)	0.38 (9.7)
SQF2B-F-8G	1/2"PF	1.73 (43.9)	1-1/16	1.30 (33.0)	0.63 (16.0)

Options – SQF Series

Stem and Body Protector

• Stem and body protectors protect uncoupled bodies and stems from damage and contaminants.
• Protectors are not pressure containing devices.
• Protectors include stainless steel lanyard and lanyard clamp.
• To order, select ordering number and add body designator. EX) SQF2S-P-S6
• Stem and body protectors material & Designator
- SS316 : S6
- Brass : BS

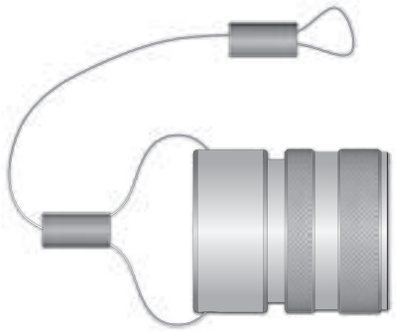

Stem Protector

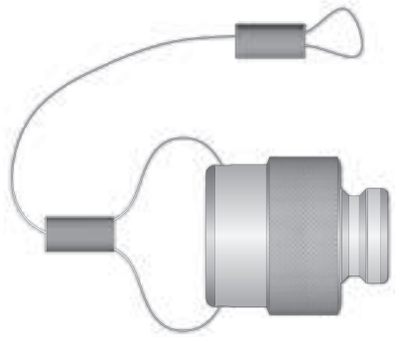

Body Protector

Series	Ordering Number	
	Stem Protector	Body Protector
SQF1	SQF1S-P	SQF1B-P
SQF2	SQF2S-P	SQF2B-P
SQF3	SQF3S-P	SQF3B-P
SQF4	SQF4S-P	SQF4B-P

Filters

The best partner for value creation
We support the innovations of customers

02

Catalogue No. S-LOK Mar.2024

SFI30 & SFT60 Filters

Features

- Trapping fine contamination to maintain system purity
- Gas and liquid filtration
- Standard micron filtering ranges : 0.5, 2, 7, 15, 60 and 90 microns
- Replaceable SS316 sintered elements
- SS316 and Brass body construction
- Choice of reliable S-Lok, NPT & ISO pipe end connections
- Heat Code Traceability

SFI30 IN-Line Filters	SFT60 Tee Filters
• In-line filters are applicable where space is limited and elements don't have to be replaced often. • Compact in-line design with large filtration area • Maximum working pressure 3,000 psig @100˚F (206 bar @ 38˚C)	• Filter Element replaceable with the valve in-line. • Safety union bonnet design for high pressure rating • Optional Bypass for sampling or purging of process fluid. • Maximum working pressure 6,000 psig@100˚F (413 bar @38˚C)

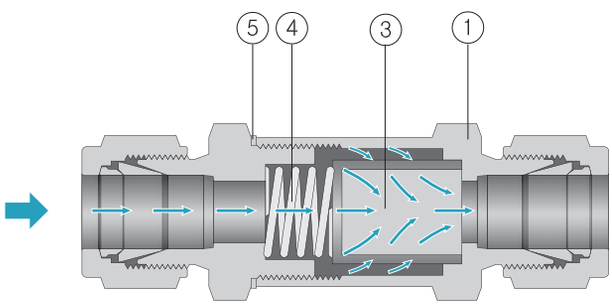

SFI30 In-Line Filters

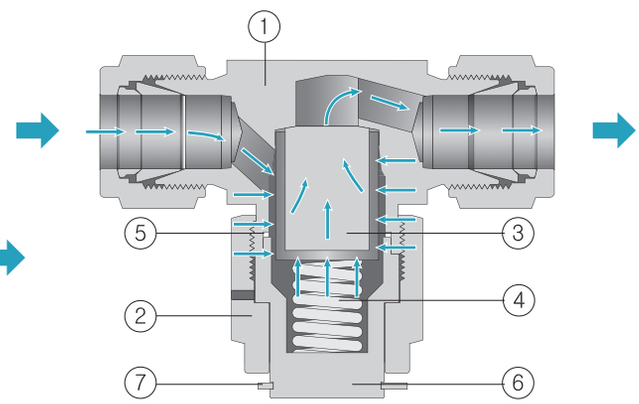

SFT60 Tee Filters

Materials of Construction

Component		SFI30		SFT60	
		Grade / ASTM / Specification			
1	Body	SS316/A276	Brass/B16	SS316/A276	Brass/B16
2	Nut	-	-	SS316/A276	Brass/B16
3	Sintered Element	SS316			
4	Spring	SS304			
5	Gasket	SS316/A240 silver plated			
6	Cap	-	-	SS316/A276	Brass/B16
7	Retainer Ring	-	-	Stainless Steel	

Filtration & Terminology

- **Filter Element** : The component within the Filter which traps media contamination.
- **Filtration Area** : The actual surface area of the filter element available to trap contamination.
- **Micron** : A unit of measure to describe the mean pore diameter of the filter element or the mean particle diameter of media contamination.
  ※ One micron = 0.001mm or 0.00004 inch

SFI30 Series In-Line Filters

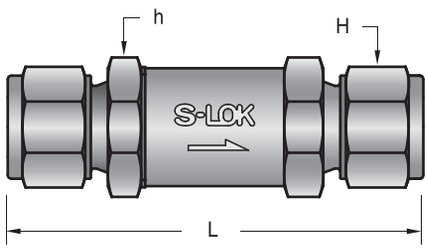

Basic Ordering Number		End Connections Inlet and Outlet	Orifice mm (in.)	Dimensions, mm (in.)		
				L	H	h
SFI 1	S-2T	1/8 in. S-LOK	2.4(0.09)	59.7(2.35)	11.1(7/16)	14.3(9/16)
	F-2N	1/8 in. Female NPT		54.9(2.16)	-	
	S-3M	3mm S-LOK		60.5(2.38)	12.0	
SFI 2	S-4T	1/4 in. S-LOK	4.7(0.19)	74.9(2.95)	14.3(9/16)	19.1(3/4)
	M-4N	1/4 in. Male NPT		68.3(2.69)	-	
	F-4N	1/4 in. Female NPT		72.9(2.87)	-	
	S-6M	6mm S-LOK		75.2(2.96)	14.0	
SFI 3	M-8N	1/2 in. Male NPT	7.1(0.28)	81.3(3.20)	27.0(1-1/16)	25.4(1)
	S-6T	3/8 in. S-LOK		81.5(3.21)		
SFI 4	S-8T	1/2 in. S-LOK	10.3(0.41)	88.6(3.49)	22.2(7/8)	25.4(1)

All dimensions shown are for reference only and are subject to change.
Dimensions with S-Lok nuts are in finger-tight position.

Flow Capacities

Filter Series	Element Nominal Pore Micron μm	Inlet Pressure,① psig (bar)			Pressure Drop, psi (bar)		
		5(0.34)	10(0.68)	15(1.0)	10(0.68)	50(3.4)	100(6.8)
		Air Flow, std ft³/min (std L/min)			Water Flow, U.S. gal/min (L/min)		
SFI 1 Series	0.5	0.04 (1.1)	0.06 (1.7)	0.12 (3.4)	0.01 (0.03)	0.04 (0.15)	0.12 (0.45)
	2	0.20 (5.6)	0.40 (11)	0.60 (17)	0.08 (0.30)	0.24 (0.91)	0.40 (1.5)
	7	0.50 (14)	0.90 (25)	1.2 (34)	0.10 (0.37)	0.30 (1.1)	0.48 (1.8)
	15	0.80 (22)	1.3 (36)	1.5 (42)	0.12 (0.45)	0.36 (1.3)	0.58 (2.1)
	60	1.7 (48)	2.2 (62)	2.4 (68)	0.15 (0.56)	0.50 (1.8)	0.70 (2.6)
	90	1.8 (51)	2.2 (62)	2.6 (73)	0.20 (0.75)	0.50 (1.8)	0.60 (2.2)
SFI 2 Series	0.5	0.12 (3.4)	0.26 (7.3)	0.48 (13)	0.04 (0.15)	0.17 (0.64)	0.29 (1.0)
	2	0.60 (17)	1.4 (39)	2.3 (65)	0.24 (0.90)	0.86 (3.2)	1.3 (4.9)
	7	1.4 (39)	2.9 (82)	4.7 (130)	0.40 (1.5)	1.3 (4.9)	2.0 (7.5)
	15	1.2 (34)	2.9 (82)	4.7 (130)	0.50 (1.8)	1.3 (4.9)	2.1 (7.9)
	60	3.1 (87)	5.9 (160)	8.5 (240)	0.90 (3.4)	3.3 (12)	4.6 (17)
	90	4.1 (110)	7.5 (210)	10 (280)	1.2 (4.5)	4.2 (15)	6.1 (23)
SFI 3 Series SFI 4 Series	0.5	0.36 (10)	0.86 (24)	1.6 (45)	0.09 (0.34)	0.40 (1.5)	0.76 (2.8)
	2	1.4 (39)	2.8 (79)	4.0 (110)	0.26 (0.98)	1.1 (4.1)	1.6 (6.0)
	7	1.8 (51)	4.2 (119)	6.8 (190)	0.64 (2.4)	2.2 (8.3)	3.5 (13)
	15	1.8 (51)	4.9 (130)	7.9 (220)	0.84 (3.1)	2.6 (9.8)	4.1 (15)
	60	5.1 (140)	10 (280)	15 (420)	2.0 (7.5)	6.7 (25)	10 (37)
	90	6.1 (170)	11 (310)	16 (450)	2.3 (8.7)	7.6 (28)	11 (41)

Element Replacement

- The sintered elements don't permit the contaminants in the gas and liquid to pass through the elements when they are bigger than the pore size of micron.
- Contaminants are trapped by element pores and it results in pressure buildup.
- Contamination comes earlier when flow volume is high and media is not clean.
- The filtering elements need to be replaced for the pressure drop as well as its system purity.

※Note : Clean filter valve components whenever the element is replaced.

Sintered Elements

- Stainless steel 316 sintered
- High heat resistance and thermal stability up to 1,500˚F (815˚C).
- High permeability with low-pressure drop.
- Shape-stability with self-supporting structural elements.
- Suitable for compression, vibration, and high impulse pressure.
- Precise filtration due to the exact and uniform pore size and distribution.
- Chemical resistance against acids and caustic solutions in various ranges of pH.

Element Designator	Nominal Pore Size, ㎛	Pore Size Range, ㎛	Element Porosity	Cv Factor	Max. Pressure Differential Across Clean Filters at 70˚F (21˚C)
05	0.5	0.5-2	17%	0.046	1160 psig (80 bar)
2	2	1-4	22%	0.056	
7	7	5-10	27%	0.12	
15	15	11-25	36%	0.13	
60	60	50-75	44%	0.38	
90	90	75-110	45%	0.50	

Pressure-Temperature Ratings

Filter Series	Pressure Rating @100˚F (38˚C) psig (bar)		Temperature Rating ˚F (˚C)		Filtration Area with Sintered Element inch² (mm²)
Body Material	SS316	Brass	SS316	Brass	
SFI 1	3000(206)	1000(68.9)	-20 to 900 (-28 to 482)	-20 to 300 (-28 to 148)	0.55(350)
SFI 2					1.30(830)
SFI 3, SFI 4	2500(172)				1.98(1280)

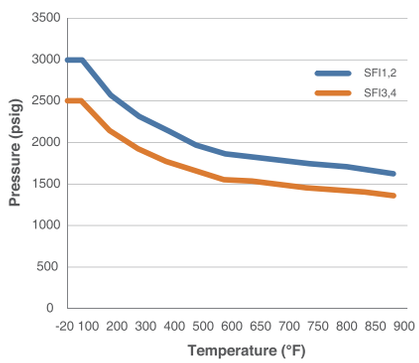

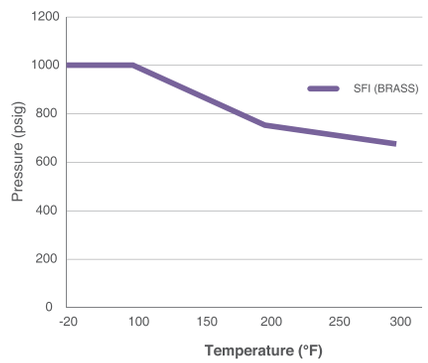

Ordering Information

Select desired basic ordering number, element designator, option and body material listed below.

SFI1-S-4T — **7** — **S6**

Series Designator	Sintered Element		Body Material
	Element Designator	Nominal Micron	
Basic Ordering Number	05	0.5	• S6 : SS316 • BS : Brass
	2	2	
	7	7	
	15	15	
	60	60	
	90	90	
	NE	Filter with no element	

SFT60 Series Tee Filters

Ordering Information and Dimensions

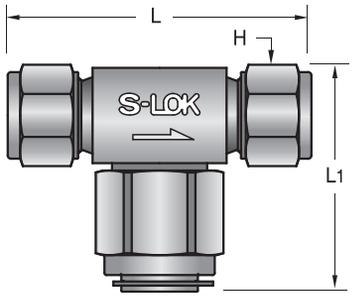

Basic Ordering Number		End Connections Inlet and Outlet	Orifice inch (mm)	Dimensions.mm (in.)		
				L	L_1	H
SFT 1	F-2N	1/8 in. Female NPT	0.17(4.4)	50.8(2.00)	47.5 (1.87)	-
	S-2T	1/8 in. S-LOK	0.09(2.3)	27.7(2.27)		7/16
	S-4T	1/4 S-LOK	0.17 (4.4)	62.7(2.47)		9/16
	M-4N	1/4 Male NPT		54.1(2.13)		-
	F-4N	1/4 Female NPT		54.1(2.13)		-
	S-6M	6mm S-LOK		62.5(2.46)		14mm
SFT 2	S-6T	3/8 S-LOK	0.21 (5.4)	72.1(2.84)	56 (2.20)	11/16
	S-8M	8mm S-LOK		72.1(2.84)		16mm
SFT 3	M-6N	3/8 Male NPT	0.25 (6.4)	60.5(2.38)	56 (2.20)	-
	S-10M	10mm S-LOK		72.6(2.86)		19mm
	S-12M	12mm s-lok		77.2(3.04)		22mm
	S-8T	1/2 S-LOK		77.2(3.04)		7/8
	M-8N	1/2in. Male NPT		68.9(2.75)		-

All dimensions shown are for reference only and are subject to change.
Dimensions with S-Lok nuts are in finger-tight position.

Flow Capacities

Filter Series	Element Nominal Pore Micron μm	Inlet Pressure,[1] psig (bar)			Pressure Drop, psi (bar)		
		5(0.34)	10(0.68)	15(1.0)	10(0.68)	50(3.4)	100(6.8)
		Air Flow, std ft³/min (std L/min)			Water Flow, U.S. gal/min (L/min)		
SFT 1 Series	0.5	0.04 (1.1)	0.06 (1.7)	0.12 (3.4)	0.04 (0.15)	0.17 (0.64)	0.29 (1.0)
	2	0.20 (5.6)	0.40 (11)	0.60 (17)	0.08 (0.30)	0.24 (0.91)	0.40 (1.5)
	7	0.50 (14)	0.90 (25)	1.2 (34)	0.10 (0.37)	0.30 (1.1)	0.48 (1.8)
	15	0.80 (22)	1.3 (36)	1.5 (42)	0.12 (0.45)	0.36 (1.3)	0.58 (2.1)
	60	1.7 (48)	2.2 (62)	2.4 (68)	0.15 (0.56)	0.50 (1.8)	0.70 (2.6)
	90	1.8 (51)	2.2 (62)	2.6 (73)	0.20 (0.75)	0.50 (1.8)	0.60 (2.2)
SFT 2 Series	0.5	0.12 (3.4)	0.26 (7.3)	0.48 (13)	0.04 (0.15)	0.17 (0.64)	0.29 (1.0)
	2	0.60 (17)	1.4 (39)	2.3 (65)	0.24 (0.90)	0.86 (3.2)	1.3 (4.9)
	7	1.4 (39)	2.9 (82)	4.7 (130)	0.40 (1.5)	1.3 (4.9)	2.0 (7.5)
	15	1.2 (34)	2.9 (82)	4.7 (130)	0.50 (1.8)	1.3 (4.9)	2.1 (7.9)
	60	3.1 (87)	5.9 (160)	8.5 (240)	0.80 (3.0)	2.7 (10)	3.9 (14)
	90	4.1 (110)	7.5 (210)	10 (280)	1.1 (4.1)	3.4 (12)	4.9 (18)
SFT 3 Series	0.5	0.36 (10)	0.86 (24)	1.6 (45)	0.09 (0.34)	0.40 (1.5)	0.76 (2.8)
	2	1.4 (39)	2.8 (79)	4.0 (110)	0.26 (0.98)	1.1 (4.1)	1.6 (6.0)
	7	1.8 (51)	4.2 (119)	6.8 (190)	0.64 (2.4)	2.2 (8.3)	3.5 (13)
	15	1.8 (51)	4.9 (130)	7.9 (220)	0.84 (3.1)	2.6 (9.8)	4.1 (15)
	60	5.1 (140)	10 (280)	15 (420)	1.5 (5.6)	4.8 (18)	6.7 (25)
	90	6.1 (170)	11 (310)	16 (450)	1.7 (6.4)	5.5 (20)	7.6 (28)

Pressure-Temperature Ratings

Filter Series	Pressure Rating @100˚F (38˚C) psig (bar)		Temperature Rating ˚F (˚C)		Filtration Area with Sintered Element inch² (mm²)
Valve Material	SS316	Brass	SS316	Brass	
SFT1, SFT2	6,000(413)	2,000(137)	-20 to 900 (-28 to 482)	-20 to 300 (-28 to 148)	1.3(830)
SFT3					1.98(1280)

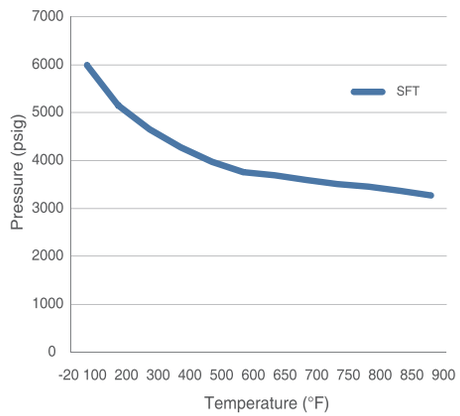

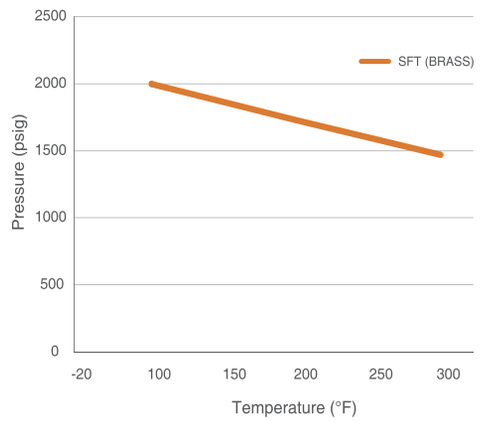

SFT Series Tee Filter CNG / NGV Certifications

Certificates	ECE R110	ANSI NGV 3.1 - 2012	ISO 15500
Certificate No.	110R-010334	126841AUT15	126841MECH104
Classification	Class 0	Manual valve	Manual valve
Temperature	-40 to 120˚C (-40 to 248˚F)	-40 to 120˚C (-40 to 248˚F)	-40 to 120˚C (-40 to 248˚F)
Working Pressure	260 bar @ 120˚C	248 bar @ 120˚C	260 bar @ 120˚C

Ordering Information

Select desired basic ordering number, element designator, option and body material listed below.

SFT1-S-6T — 7 — BF2N — S6

Series Designator	Sintered Element		By-pass	Body Material
	Element Designator	Nominal Micron		
Basic Ordering Number	05	0.5	• Nil : No By-pass option • BF2N : 1/8 in. Female NPT • BF4N : 1/4 in. Female NPT	• S6 : SS316 • BS : Brass
	2	2		
	7	7		
	15	15		
	60	60		
	90	90		
	NE	Filter with no element		

Flexible Hoses

The best partner for value creation
We support the innovations of customer

03

Catalogue No. S-LOK Mar.2024

Metal Flexible Hoses – SHFH Series

Features

- Stainless steel construction.
- All-metal flexible hoses increase corrosion resistance.
- Size range of 1/4 ~ 1/2 inch and various end connections.
- Working pressures from vacuum up to 3600 psig (248 bar).
- 304 stainless steel single braid layer increases hose pressure containment.
- Custom assemblies and length available.

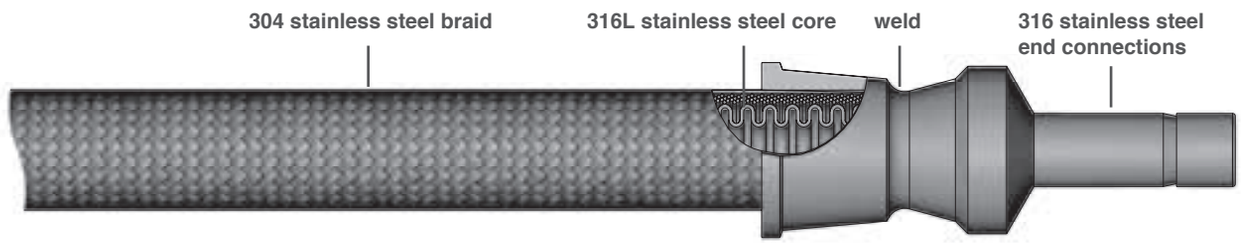

Technical Data

Hose Series & Nominal Hose Size Designator	Nominal Hose Size , inch	Minimum Bending Radius mm (inch)		Working Pressure @ -200~37℃ (-325~100°F) psig (bar)	Minimum Burst Pressure @ 20℃ (70°F) psig (bar)	Temperature Rating ℃ (°F)
		Static	Dynamic			
SHFH4	1/4	57.2 (2.25)	254 (10)	3600 (248)	14400 (992)	-200 ~ 454 (-325 ~ 850)
SHFH6	3/8	76.2 (3.00)	305 (12)	2500 (172)	10000 (689)	
SHFH8	1/2	114.3 (4.50)	406 (16)	2200 (151)	8800 (606)	

Pressure – Temperature Ratings

Nominal Hose Size, in	1/4	3/8	1/2
Temperature, ℃ (°F)	Working Pressure, psig (bar)		
-200 (-325) ~ 37 (100)	3600 (248)	2500 (172)	2200 (151)
93 (200)	3024 (208)	2100 (144)	1848 (126)
148 (300)	2736 (188)	1900 (130)	1672 (114)
204 (400)	2520 (173)	1750 (120)	1540 (105)
260 (500)	2340 (161)	1625 (111)	1430 (98)
315 (600)	2232 (153)	1550 (106)	1364 (93)
371 (700)	2124 (146)	1475 (101)	1298 (89)
426 (800)	2052 (141)	1425 (98)	1254 (86)
454 (850)	2016 (138)	1400 (96)	1232 (84)

Minimum Bend Radius

- Follow the minimum bend radius of the hose.
- If the hose is installed with a small bend radius, the hose may kink and reduce hose life.
- If the hose is bent too close to the hose connection, the hose may rupture or leakage.
- Minimum straight length is twice the outer diameter of the hose.

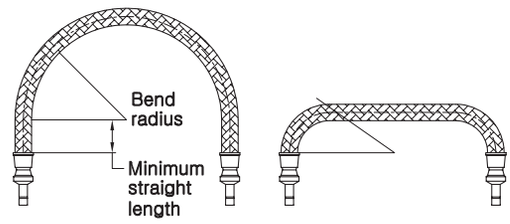

Standard Length Hose Assemblies

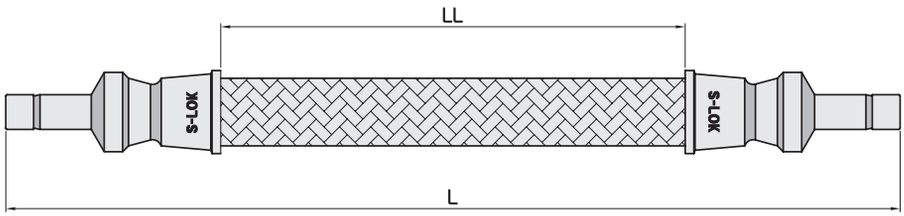

S-LOK Tube Adapter End Connections

Ordering Number	Nominal Hose Size	Tube Adapter Size	Dimensions, mm (inch)			
			Overall Length L	Live Length LL	Min. Inside Diameter	Max. Outside Dimension
SHFH4-TA4-300L-S6	1/4"	1/4"	300 (11.81)	210.6 (8.29)	4.1 (0.16)	19.0 (0.75)
SHFH4-TA4-500L-S6			500 (19.68)	410.6 (16.16)		
SHFH4-TA4-700L-S6			700 (27.56)	610.6 (24.04)		
SHFH4-TA4-1000L-S6			1000 (39.37)	910.6 (35.85)		
SHFH6-TA6-300L-S6	3/8"	3/8"	300 (11.81)	207.6 (8.17)	6.9 (0.27)	23.6 (0.93)
SHFH6-TA6-500L-S6			500 (19.68)	407.6 (16.04)		
SHFH6-TA6-700L-S6			700 (27.56)	607.6 (23.92)		
SHFH6-TA6-1000L-S6			1000 (39.37)	907.6 (35.73)		
SHFH8-TA8-300L-S6	1/2"	1/2"	300 (11.81)	187.2 (7.37)	9.4 (0.37)	26.7 (1.05)
SHFH8-TA8-500L-S6			500 (19.68)	387.2 (15.24)		
SHFH8-TA8-700L-S6			700 (27.56)	587.2 (23.12)		
SHFH8-TA8-1000L-S6			1000 (39.37)	887.2 (34.93)		
SHFH4-TA6M-300L-S6	1/4"	6mm	300 (11.81)	211.2 (8.31)	4.1 (0.16)	19.0 (0.75)
SHFH4-TA6M-500L-S6			500 (19.68)	411.2 (16.19)		
SHFH4-TA6M-700L-S6			700 (27.56)	611.2 (24.06)		
SHFH4-TA6M-1000L-S6			1000 (39.37)	911.2 (35.87)		
SHFH6-TA10M-300L-S6	3/8"	10mm	300 (11.81)	206 (8.11)	7.1 (0.28)	23.5 (0.93)
SHFH6-TA10M-500L-S6			500 (19.68)	406 (15.98)		
SHFH6-TA10M-700L-S6			700 (27.56)	606 (23.86)		
SHFH6-TA10M-1000L-S6			1000 (39.37)	906 (35.67)		
SHFH8-TA12M-300L-S6	1/2"	12mm	300 (11.81)	185.6 (7.31)	8.9 (0.35)	26.7 (1.05)
SHFH8-TA12M-500L-S6			500 (19.68)	385.6 (15.18)		
SHFH8-TA12M-700L-S6			700 (27.56)	585.6 (23.05)		
SHFH8-TA12M-1000L-S6			1000 (39.37)	885.6 (34.86)		

Ordering Information and End Connection Dimensions

SHFH4	-	S4	-	M4N	-	12	-	S6
Hose		End Connection 1		End Connection 2		Overall Length		Material

- **Overall Length**
  - Millimeters or inches, in whole numbers. See Example.
  Example – Millimeter : SHFH4-TA4-800L-S6
  Example – Inch : SHFH4-M4N-F4N-12-S6
- **Material – End Connections**
  - S6 : Stainless Steel 316

S-LOK Tube Fittings

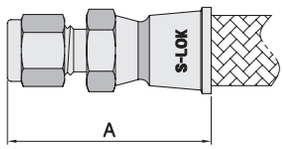

Nominal Hose Size Designator	End Connection Designator	End Connection Size	Dimensions, mm (inch)		
			A	Min. Inside Diameter	Max. Outside Dimension
SHFH4	S4	1/4"	49.3 (1.94)	4.8 (0.19)	24.1 (0.95)
SHFH6	S6	3/8"	51.3 (2.02)	7.1 (0.28)	27.7 (1.09)
SHFH8	S8	1/2"	56.9 (2.24)	10.4 (0.41)	31.2 (1.23)
SHFH4	S6M	6mm	49.3 (1.94)	4.8 (0.19)	20.6 (0.81)
SHFH4	S8M	8mm	50.3 (1.98)	6.4 (0.25)	20.6 (0.81)
SHFH6	S10M	10mm	51.6 (2.03)	7.9 (0.31)	27.9 (1.10)
SHFH8	S12M	12mm	59.7 (2.35)	9.7 (0.38)	31.3 (1.23)

S-LOK Tube Adapters

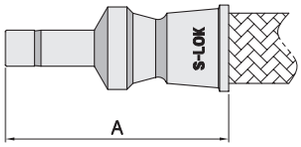

Nominal Hose Size Designator	End Connection Designator	End Connection Size	Dimensions, mm (inch)		
			A	Min. Inside Diameter	Max. Outside Dimension
SHFH4	TA4	1/4"	44.7 (1.76)	4.1 (0.16)	19.0 (0.75)
SHFH6	TA6	3/8"	46.2 (1.82)	6.9 (0.27)	23.6 (0.93)
SHFH8	TA8	1/2"	56.4 (2.22)	9.4 (0.37)	26.7 (1.05)
SHFH4	TA6M	6mm	44.4 (1.75)	4.1 (0.16)	19.0 (0.75)
SHFH6	TA10M	10mm	47.0 (1.85)	7.1 (0.28)	23.5 (0.93)
SHFH8	TA12M	12mm	57.2 (2.25)	8.9 (0.35)	26.7 (1.05)

Male Pipe Threads

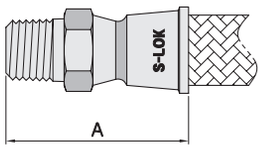

Nominal Hose Size Designator	End Connection Designator	End Connection Size	Dimensions, mm (inch)		
			A	Min. Inside Diameter	Max. Outside Dimension
SHFH4	M4N	1/4"	45.7 (1.80)	7.1 (0.28)	23.9 (0.94)
SHFH6	M4N	1/4"	46.0 (1.81)	7.1 (0.28)	27.7 (1.09)
SHFH6	M6N	3/8"	46.0 (1.81)	9.7 (0.38)	27.7 (1.09)
SHFH8	M8N	1/2"	54.6 (2.15)	11.9 (0.47)	31.2 (1.23)

Female Pipe Threads

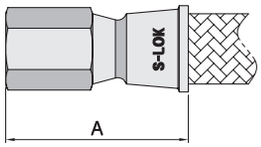

Nominal Hose Size Designator	End Connection Designator	End Connection Size	Dimensions, mm (inch)		
			A	Min. Inside Diameter	Max. Outside Dimension
SHFH4	F4N	1/4"	46.0 (1.81)	7.1 (0.28)	23.9 (0.94)
SHFH6	F6N	3/8"	47.5 (1.87)	9.7 (0.38)	27.7 (1.09)
SHFH8	F8N	1/2"	55.4 (2.18)	11.9 (0.47)	31.2 (1.23)

Metal Flexible Hoses – SFH Series

Features

- Vacuum or general purpose all-metal hose.
- Stainless steel construction.
- Size range of 1/4 ~ 2 inch and various end connections.
- Working pressure up to 1600 psig (110 bar).
- 304 stainless steel single braid layer increases hose pressure containment.
- Custom assemblies and length available.

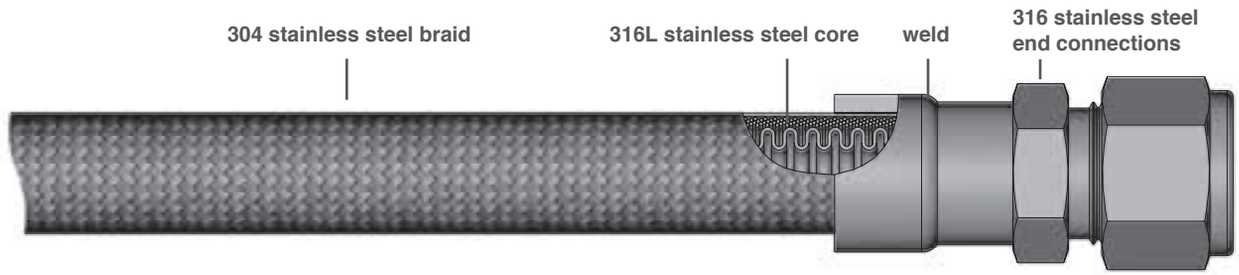

Technical Data

Hose Series & Nominal Hose Size Designator	Nominal Hose Size , inch	Minimum Bending Radius mm (inch)		Working Pressure @ -200~37℃ (-325~100°F) psig (bar)	Minimum Burst Pressure @ 20℃ (70°F) psig (bar)	Temperature Rating ℃ (°F)
		Static	Dynamic			
SFH4	1/4	19.0 (0.75)	110 (4.33)	1600 (110)	6400 (440)	-200 ~ 426 (-325 ~ 800)
SFH6	3/8	22.1 (0.87)	150 (5.91)	1470 (101)	6000 (413)	
SFH8	1/2	26.4 (1.04)	165 (6.50)	1110 (76.4)	4500 (310)	
SFH12	3/4	40.9 (1.61)	225 (8.86)	860 (59.2)	3500 (241)	
SFH16	1	48.0 (1.89)	259 (10.20)	680 (46.8)	2680 (184)	
SFH20	1-1/4	54.9 (2.16)	300 (11.80)	680 (46.8)	2600 (179)	
SFH24	1-1/2	59.2 (2.33)	340 (13.40)	520 (35.8)	2200 (151)	
SFH32	2	78.7 (3.10)	391 (15.40)	450 (31.0)	1800 (124)	

Pressure – Temperature Ratings

Nominal Hose Size, in	1/4	3/8	1/2	3/4	1	1-1/4	1-1/2	2
Temperature, ℃ (°F)	Working Pressure, psig (bar)							
-200 (-325) ~ 148 (300)	1600 (110)	1470 (101)	1110 (76.4)	860 (59.2)	680 (46.8)	680 (46.8)	520 (35.8)	450 (31.0)
204 (400)	1488 (102)	1367 (94.1)	1032 (71.1)	800 (55.1)	632 (43.5)	632 (43.5)	484 (33.3)	419 (28.8)
260 (500)	1376 (94.8)	1264 (87.1)	955 (65.7)	740 (50.9)	585 (40.2)	585 (40.2)	447 (30.8)	387 (26.6)
315 (600)	1296 (89.2)	1191 (82.0)	899 (61.9)	697 (47.9)	551 (37.9)	551 (37.9)	421 (29.0)	365 (25.1)
371 (700)	1232 (84.8)	1132 (77.9)	855 (58.8)	662 (45.6)	524 (36.0)	524 (36.0)	400 (27.5)	347 (23.8)
398 (750)	1200 (82.6)	1103 (75.9)	833 (57.3)	645 (44.4)	510 (35.1)	510 (35.1)	390 (26.8)	338 (23.2)
426 (800)	1184 (81.5)	1088 (74.9)	821 (56.5)	636 (43.8)	503 (34.6)	503 (34.6)	385 (26.5)	333 (22.9)

Ordering Information and End Connection Dimensions

SFH4	-	M4N	-	F4N	-	12	-	S6
Hose		End Connec-tion 1		End Connec-tion 2		Overall Length		Material

- **Overall Length**
  - Inches or centimeters, in whole numbers. See Example.
  Example – Millimeter : SFH4-TA4-800L-S6
  Example – Inch : SFH4-M4N-F4N-12-S6
- **Material** – End Connections
  - S6 : Stainless Steel 316

S-LOK Tube Fittings

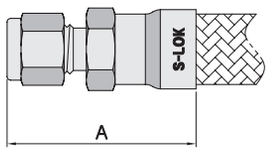

Nominal Hose Size Designator	End Connection Designator	End Connection Size	Dimensions, mm (inch)		
			A	Min. Inside Diameter	Max. Outside Dimension
SFH4	S4	1/4	48.2 (1.90)	4.8 (0.19)	14.7 (0.58)
SFH6	S6	3/8	54.8 (2.16)	7.1 (0.28)	19.0 (0.75)
SFH8	S8	1/2	59.4 (2.34)	10.4 (0.41)	23.8 (0.94)
SFH12	S12	3/4	66.3 (2.61)	16.0 (0.63)	31.2 (1.23)
SFH16	S16	1	76.2 (3.00)	22.4 (0.88)	40.3 (1.59)
SFH20	S20	1-1/4	93.2 (3.67)	27.7 (1.09)	51.3 (2.02)
SFH24	S24	1-1/2	102.9 (4.05)	34.3 (1.35)	62.3 (2.45)
SFH32	S32	2	126.5 (4.98)	46.2 (1.82)	80.7 (3.18)

S-LOK Tube Adapters

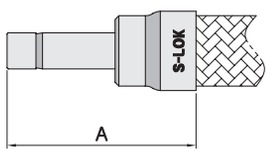

Nominal Hose Size Designator	End Connection Designator	End Connection Size	Dimensions, mm (inch)		
			A	Min. Inside Diameter	Max. Outside Dimension
SFH4	TA4	1/4	41.8 (1.65)	4.6 (0.18)	13.5 (0.53)
SFH6	TA6	3/8	48.5 (1.91)	6.9 (0.27)	19.0 (0.75)
SFH8	TA8	1/2	56.2 (2.21)	9.4 (0.37)	21.2 (0.83)
SFH12	TA12	3/4	60.7 (2.39)	14.7 (0.58)	26.8 (1.06)
SFH16	TA16	1	71.7 (2.82)	20.3 (0.80)	32.0 (1.26)
SFH20	TA20	1-1/4	84.0 (3.31)	25.9 (1.02)	38.0 (1.50)
SFH24	TA24	1-1/2	93.5 (3.68)	31.8 (1.25)	46.0 (1.81)
SFH32	TA32	2	110.4 (4.35)	43.7 (1.72)	59.0 (2.32)

Male Pipe Threads

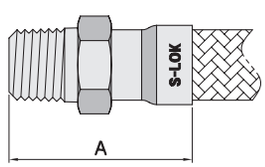

Nominal Hose Size Designator	End Connection Designator	End Connection Size	Dimensions, mm (inch)		
			A	Min. Inside Diameter	Max. Outside Dimension
SFH4	M4N	1/4	43.2 (1.70)	7.1 (0.28)	16.2 (0.64)
SFH6	M6N	3/8	48.5 (1.90)	9.7 (0.38)	20.8 (0.82)
SFH8	M8N	1/2	58.9 (2.32)	11.9 (0.47)	25.4 (1.00)
SFH12	M12N	3/4	62.2 (2.45)	16.0 (0.63)	32.3 (1.27)
SFH16	M16N	1	77.5 (3.05)	22.4 (0.88)	40.4 (1.59)
SFH20	M20N	1-1/4	79.8 (3.14)	27.7 (1.09)	50.8 (2.00)
SFH24	M24N	1-1/2	85.9 (3.38)	34.0 (1.34)	57.7 (2.27)
SFH32	M32N	2	92.2 (3.63)	46.0 (1.81)	71.6 (2.82)

Female Pipe Threads

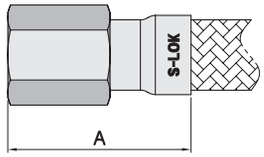

Nominal Hose Size Designator	End Connection Designator	End Connection Size	Dimensions, mm (inch)		
			A	Min. Inside Diameter	Max. Outside Dimension
SFH4	F4N	1/4	45 (1.77)	7.6 (0.30)	21.9 (0.86)
SFH6	F6N	3/8	49 (1.93)	10.7 (0.42)	26.6 (1.05)
SFH8	F8N	1/2	55 (2.17)	14.7 (0.58)	31.2 (1.23)
SFH12	F12N	3/4	63 (2.48)	18.5 (0.73)	38.1 (1.50)
SFH16	F16N	1	70 (2.76)	24.1 (0.95)	46.2 (1.82)
SFH20	F20N	1-1/4	75 (2.95)	31.8 (1.25)	55.4 (2.18)
SFH24	F24N	1-1/2	75 (2.95)	38.1 (1.50)	63.5 (2.50)
SFH32	F32N	2	80 (3.15)	50.8 (2.00)	78.5 (3.09)

PTFE Flexible Hoses – SPFH Series

Features

- PTFE hose with improved permeation-resistance.
- Size range of 1/4, 3/8 inch and various end connections.
- Working pressure up to 3000 psig (206 bar).
- 304 stainless steel single braid layer increases hose pressure containment.
- Custom assemblies and length available.

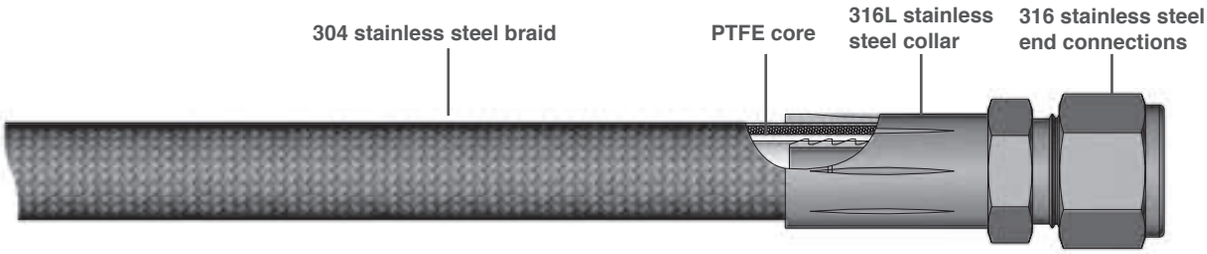

Technical Data

Hose Series & Nominal Hose Size Designator	Nominal Hose Size , inch	Minimum Bending Radius mm (inch)		Working Pressure @-17 ~37℃ (0 ~ 100°F) psig (bar)	Minimum Burst Pressure @ 20℃ (70°F) psig (bar)	Temperature Rating ℃ (°F)
		Static	Dynamic			
SPFH4	1/4	38.1 (1.5)	50.8 (2.0)	3000 (206)	12000 (826)	-53 ~ 230 (-65 ~ 450)
SPFH6	3/8	88.9 (3.5)	127.0 (5.0)	2500 (172)	10000 (689)	

Pressure Temperature Ratings

Nominal Hose Size, in	1/4	3/8
Temperature , ℃ (°F)	Working Pressure , psig (bar)	
-53 (-65)	2250 (155)	1875 (129)
-17 (0) ~ 37 (100)	3000 (206)	2500 (172)
93 (200)	1740 (119)	1450 (99.9)
148 (300)	1560 (107)	1300 (89.5)
204 (400)	1440 (99.2)	1200 (82.6)
230 (450)	1380 (95.0)	1150 (79.2)

Ordering Information and End Connection Dimensions

SPFH4	-	M4N	-	F4N	-	12	-	S6
Hose		End Connec-tion 1		End Connec-tion 2		Overall Length		Material

- **Overall Length** - Inches or centimeters. See Example.
  Example – Millimeter : SPFH4-TA4-800L-S6
  Example – Inch : SPFH4-M4N-F4N-12-S6
- **Material** – S6 : Stainless Steel 316

S-LOK Tube Fittings

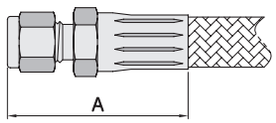

Nominal Hose Size Designator	End Connection Designator	End Connection Size	Dimensions, mm (inch)		
			A	Min. Inside Diameter	Max. Outside Dimension
SPFH4	S4	1/4	25.4 (1.0)	4.1 (0.16)	16.6 (0.65)
SPFH6	S6	3/8	28.0 (1.1)	6.9 (0.27)	22.1 (0.87)

S-LOK Tube Adapters

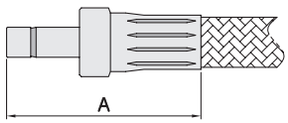

Nominal Hose Size Designator	End Connection Designator	End Connection Size	Dimensions, mm (inch)		
			A	Min. Inside Diameter	Max. Outside Dimension
SPFH4	TA4	1/4	41.7 (1.64)	4.1 (0.16)	13.7 (0.54)
SPFH6	TA6	3/8	46.0 (1.81)	6.9 (0.27)	18.5 (0.73)

Male Pipe Threads

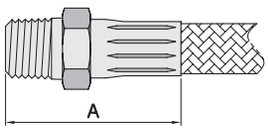

Nominal Hose Size Designator	End Connection Designator	End Connection Size	Dimensions, mm (inch)		
			A	Min. Inside Diameter	Max. Outside Dimension
SPFH4	M4N	1/4	47.8 (1.88)	4.1 (0.16)	20.3 (0.80)
SPFH6	M6N	3/8	50.3 (1.98)	6.9 (0.27)	20.3 (0.80)

Female Pipe Threads

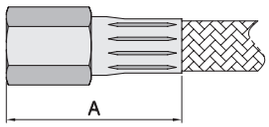

Nominal Hose Size Designator	End Connection Designator	End Connection Size	Dimensions, mm (inch)		
			A	Min. Inside Diameter	Max. Outside Dimension
SPFH4	F4N	1/4	47.8 (1.88)	4.1 (0.16)	22.1 (0.87)
SPFH6	F6N	3/8	51.3 (2.02)	6.9 (0.27)	25.8 (1.02)

Condensate Pot & Air Distribution Manifolds

The best partner for value creation
We support the innovations of customer

04

Catalogue No. S-LOK Mar.2024

Condensate Pot (CDP Series)

Features

- Variety material and shapes available.
- Working pressure up to Class 2500.
- Variety of end connections.
- 100% factory pressure tested. (PT test standard, optional RT test)

Material of Construction & Dimension

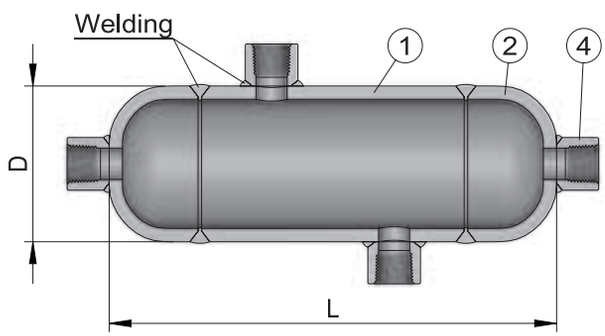

Pipe Size	D	L
3"	88.9	214
4"	114.3	360

- L length is adjustable according to client request to fit the system design.

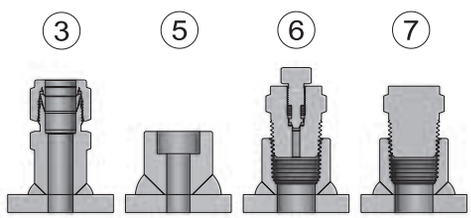

Item	Component	Material	
		Stainless Steel	Carbon Steel
1	Pipe	A312 TP316	A106 Gr B
2	Cap	A403 WP316	A234 WPB
3	S-LOK Fitting (Pipe Weld)	Stainless Steel	Carbon Steel
4	Half Coupling (Thread)		
5	Half Coupling (Socket Weld)		
6	Half Coupling With Vent Plug		
7	Half Coupling With Hex Plug		

Ordering Information

CDP3	FA300L	FEAA	S6
Series Designator	Shapes & Class Designator	Connection Designator	Material Designator

Series

CDP3	3” Seamless Pipe
CDP4	4” Seamless Pipe

Shapes & Class Designator

Shapes		Schedule		Length & Volume	
A		A	Sch40	300L	300mm
B		B	Sch80	11	11 inch
C		C	Sch160	2V	2 Liter
D		D	SchXXS		
E					
F					

Connection

A	1/2” NPT	E	Vent Plug
B	1/2” PT	F	Hex. Plug
C	1/2” SW	G	1/4” NPT
D	1/2” LOK	H	1/4” PT

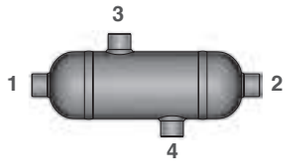

Material

S6	A312 TP316
S6L	A312 TP316L
S4	A312 TP304
S4L	A312 TP304L
P11	A335 P11
P22	A335 P22
106	A106 Gr B

Air Distribution Manifolds (SADM Series)

Features

- Variety material and wall thickness available.
- Welded body construction.
- Variety of end connections. (Optional flanged and thread inlet)
- 100% factory pressure tested. (PT test standard, optional RT test)

Material of Construction & Dimension

Double Side

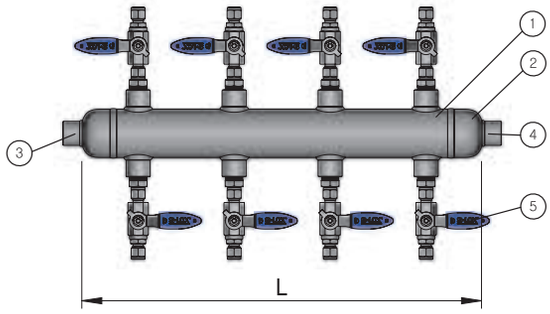

- L length is adjustable according to client request to fit the system design.

Single Side

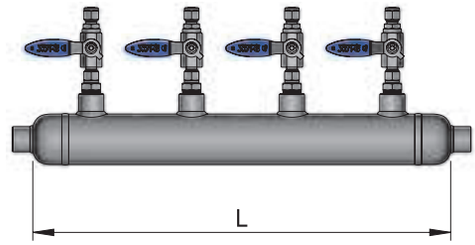

Item	Component		Material	
			Stainless Steel	Carbon Steel
1	Pipe		A312 TP316	A106 Gr B
2	Cap		A403 WP316	A234 WPB
3	Inlet (Half Coupling)		Stainless Steel	Carbon Steel
4	Outlet or Vent	Half Coupling		
5		S-LOK Ball Valve		
6		S-LOK Needle Valve		

Ordering Information

SADM3	DBF8N	BS8T20-F12N BS8T20-1*	S6
Series Designator	Class & Inlet Designator	Outlet & Vent Designator	Material Designator

Series	
SADM1	1" Seamless Pipe
SADM2	2" Seamless Pipe
SADM3	3" Seamless Pipe
SADM4	4" Seamless Pipe

Shapes		Schedule		Inlet	
D	Double	A	Sch40	4	1/4"
S	Single	B	Sch80	6	3/8"
		C	Sch160	8	1/2"
		D	SchXXS	12	3/4"
				16	1"

- Thread shape (M : Male, F : Female)
- Thread designator (N : NPT, R : PT)
ex) F8N : Female 1/2"NPT
- S-LOK end type (S*T : Inch, S*M : Metric)
ex) S8T : S-LOK 1/2", S25M : S-LOK 25mm

Connection		Outlet & Vent	
B	Ball Valve	4	1/4"
N	Needle Valve	6	3/8"
		8	1/2"
Port Q'ty		12	3/4"
2 ~ 20		16	1"

*** When the Vent's specification is same as Outlet specification, add -1. (1 means the Vent port quantity.)**

Material	
S6	A312 TP316
S6L	A312 TP316L
S4	A312 TP304
S4L	A312 TP304L
P11	A335 P11
P22	A335 P22
106	A106 Gr B

Sample Cylinders

The best partner for value creation
We support the innovations of customers

05

Catalogue No. S-LOK Mar.2024

Sample Cylinders

Features

- Double-ended sample cylinder
- 304L, 316L stainless steel and alloy 400 available
- Working pressures up to 5000 psig (344 bar)
- Volume from 300 to 2250 cm^3
- 1/8", 1/4" and 1/2" female NPT connections
- The body made of seamless tubing & pipe
- Cold formed female NPT thread provide greater strength
- Smooth internal surface without foreign particles

Testing

- All double-ended cylinders are hydrostatically tested to at least 5/3 times the working pressure.
- CD18 cylinders are hydrostatically tested at 3050 psig (210bar)
- CD50 cylinders are hydrostatically tested at 8500 psig (586bar)

Pressure - Temperature Ratings

Material	CD50 SS316L	CD18 SS316L, SS304L	CD18 Alloy 400
Temperature, ℃ (°F)	Working Pressure, psig (bar)		
-200 (-325) ~ 37 (100)	5000 (344)	1800 (124)	1800 (124)
93 (200)	3960 (272)	1360 (93.7)	1580 (108)
148 (300)	3570 (245)	1230 (84.7)	1490 (102)
204 (400)	3290 (226)	1130 (77.8)	1430 (98.5)
260 (500)	3060 (210)	1050 (72.3)	1420 (97.8)
315 (600)	2920 (201)	1000 (68.9)	1420 (97.8)
343 (650)	2870 (197)	980 (67.5)	1420 (97.8)
371 (700)	2810 (193)	970 (66.8)	1420 (97.8)
398 (750)	2750 (189)	950 (65.4)	1410 (97.1)
426 (800)	2700 (186)	930 (64.0)	-
454 (850)	2640 (181)	-	-

Ordering Information

CD	18	-	4N	-	300	-	S6L

- **Sample Cylinder**
  - CD : Double-Ended
- **Pressure Rating**
  - 18 : 1800psi
  - 50 : 5000psi
- **Connection Size**
  - 2N : 1/8"NPT Female
  - 4N : 1/4"NPT Female
  - 8N : 1/2"NPT Female
- **Internal Volume**
  - 300 : 300 cm^3
  - 400 : 400 cm^3
  - 500 : 500 cm^3
  - 1000 : 1000 cm^3
  - 2250 : 2250 cm^3
- **Material**
  - S4L : Stainless Steel 304L
  - S6L : Stainless Steel 316L
  - A400 : Alloy 400

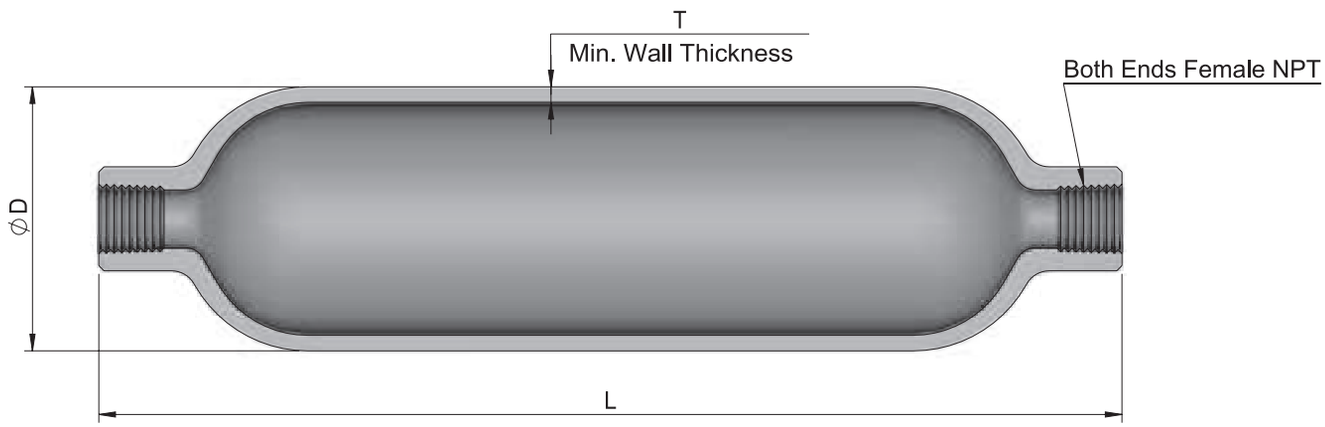

Pressure – Temperature Ratings

Ordering Number	Pressure Rating psig (bar)	Connection Size, in. NPT	Internal Volume cm3 ±10%	Dimensions, mm (inch)			Weight kg (lb)
				D	L	T	
CD18-4N-300-S6L	1800 (124)	1/4	300	50.8 (2.00)	227 (8.94)	2.4 (0.093)	0.73 (1.6)
CD18-4N-400-S6L	1800 (124)	1/4	400	50.8 (2.00)	290 (11.4)	2.4 (0.093)	0.95 (2.1)
CD18-4N-500-S6L	1800 (124)	1/4	500	50.8 (2.00)	351 (13.8)	2.4 (0.093)	1.2 (2.6)
CD18-4N-1000-S6L	1800 (124)	1/4	1000	88.9 (3.50)	277 (10.9)	4.6 (0.180)	2.9 (6.5)
CD18-8N-1000-S6L	1800 (124)	1/2	1000	88.9 (3.50)	277 (10.9)	4.6 (0.180)	2.9 (6.5)
CD18-4N-2250-S6L	1800 (124)	1/4	2250	102 (4.00)	437 (17.2)	5.2 (0.206)	6.4 (14)
CD18-8N-2250-S6L	1800 (124)	1/2	2250	102 (4.00)	437 (17.2)	5.2 (0.206)	6.4 (14)
CD50-4N-300-S6L	5000 (344)	1/4	300	48.2 (1.90)	368 (14.5)	6.1 (0.240)	2.5 (5.6)
CD50-4N-500-S6L	5000 (344)	1/4	500	48.2 (1.90)	597 (23.5)	6.1 (0.240)	4.1 (9.1)
CD18-4N-300-A400	1800 (124)	1/4	300	50.8 (2.00)	227 (8.94)	2.4 (0.093)	0.82 (1.8)
CD18-4N-500-A400	1800 (124)	1/4	500	50.8 (2.00)	351 (13.8)	2.4 (0.093)	1.3 (2.9)

S-LOK®

S-LOK
Stainless steel Seamless Tubing

The best partner for value creation
We support the innovations of customer

06

Catalogue No. S-LOK Mar.2024

S-LOK Stainless Steel Seamless Tubing

Feature

- 316/316L stainless steel
- 1/8 to 1 inch sizes
- 4 to 20mm sizes
- Tubing is marked with size material, specification, heat no and lot no.

Manufacturing Process

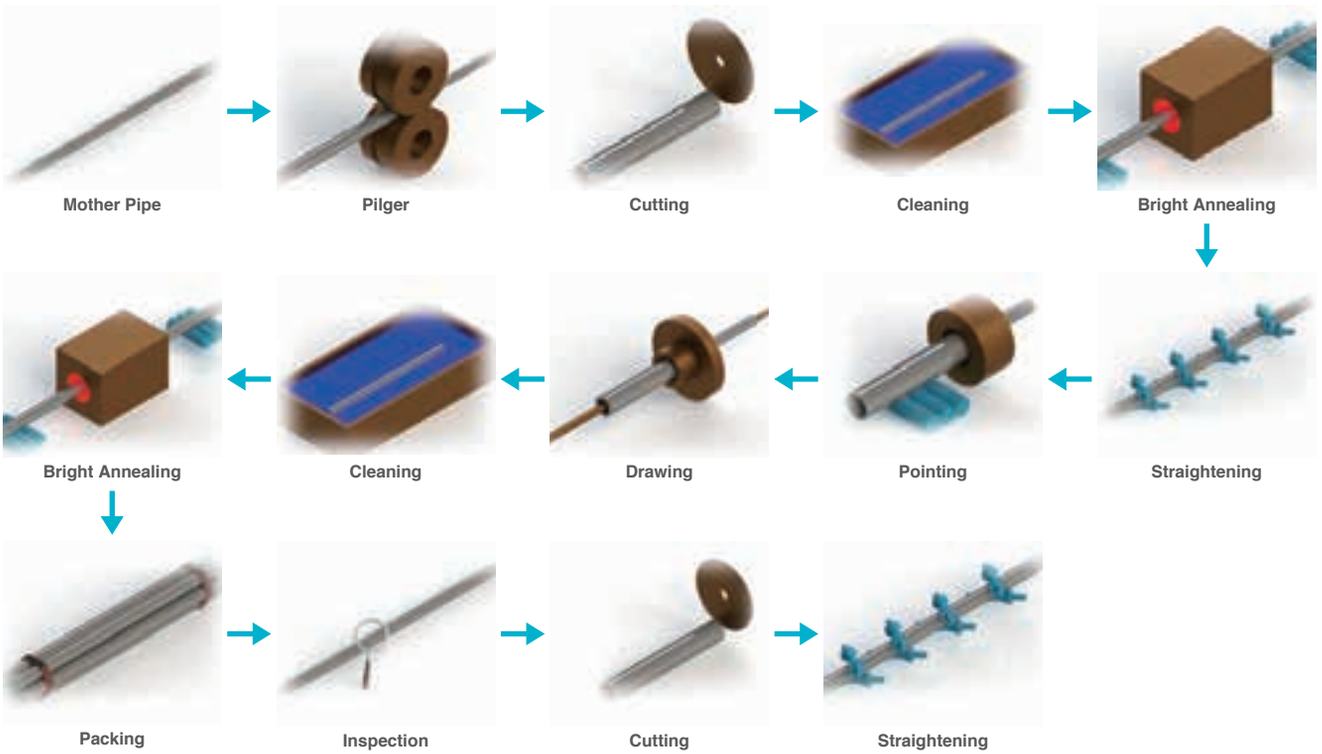

Material Standard

Seamless Tube				Welded Tube			
ASTM / ASME	DIN	EN	JIS	ASTM / ASME	DIN	EN	JIS
A213 / SA213	17458	10216-5	G3463	A249 / SA249	17457	10216-7	G3463
A312 / SA312				A312 / SA312			
A269 / SA269			G3459	A269 / SA269			G3459
A632			G3459 (Special)	A632			G3459 (Special)
A270			G3447	A270			G3447

Technical Data

Inspection item

Items	AP	BA	EP
Chemical Composition	Mill Sheet	Mill Sheet	Mill Sheet
Mechanical Properties	Mill Sheet	Mill Sheet	Mill Sheet
Measure Tolerance	O	O	O
Roughness	O	O	O
Welding Test	*	*	*
Surface Microscope	*	*	*
Particle Test		*	*
Oil Content		*	*
Eluant Ion check			*
SEM Test			*
Moisture Test			*

* marked are optional tests - Optional tests are available upon request.

Chemical Composition

Element	Composition, wt. %	
	316 / 316L	304 / 304L
C	≤ 0.035	≤ 0.035
Si	≤ 1.0	≤ 1.0
Mn	≤ 2.00	≤ 2.00
P	≤ 0.045	≤ 0.045
S	≤ 0.03	≤ 0.03
Ni	10 ~ 15	8 ~ 12
Cr	16 ~ 18	18 ~ 20
Mo	2 ~ 3	-

Inner Surface Roughness

Level	Ry
AP	≤ 2.0 μm
BA	≤ 0.38 μm
EP	≤ 0.25 μm

Ordering Information

M	—	T	S	S	—	08	—	049	—	06	—	BA	—	S6
1			2	3		4		5		6		7		8

1 - Product

M-T : Tube

2- Manufacturing method

S : Seamless
W : Welding

3 - Type of Product

S : Straight Type
C : Coil Type

4 - Tube O.D

01 : 1/16”
02 : 1/8”
03 : 3/16”
04 : 1/4”
05 : 5/16”
06 : 3/8”
08 : 1/2”
10 : 5/8”
12 : 3/4”
14 : 7/8”
16 : 1”
20 : 1-1/4”
24 : 1-1/2”
32 : 2”
2M : 2mm
3M : 3mm
4M : 4mm
6M : 6mm
8M : 8mm
10M : 10mm
12M : 12mm
16M : 16mm
20M : 20mm
22M : 22mm
25M : 25mm
28M : 28mm
32M : 32mm
38M : 38mm

5 - Wall Thickness

028 : 0.028”
035 : 0.035”
049 : 0.049”
065 : 0.065”
083 : 0.083”
095 : 0.095”
109 : 0.109”
120 : 0.120”
134 : 0.134”
156 : 0.156”
080 : 0.8mm
100 : 1.0mm
1.2T : 1.2mm
150 : 1.5mm
180 : 1.8mm
200 : 2.0mm
220 : 2.2mm
250 : 2.5mm
280 : 2.8mm
300 : 3.0mm

6 - Length

03 : 3m
04 : 4m
06 : 6m
50 : 50m
60 : 60m

7 - Product Grade

AP : AP Grade
BA : BA Grade
EP : EP Grade

8 - Material

S6 : 316/316L Stainless Steel
S4 : 304/304L Stainless Steel
CU : Copper

Ordering Information and Dimensions

Fractional Stainless Steel Seamless Tubing

Tube O.D inch	Tube Wall Thickness inch (mm)	Ordering Number	Length, m	Grade
1/16	0.012 (0.30)	M-TSS-01-012-04-BA-S6	4	BA
1/8	0.028 (0.71)	M-TSS-02-028-06-BA-S6	6	BA
3/16	0.035 (0.89)	M-TSS-03-035-06-BA-S6	6	BA
1/4	0.035 (0.89)	M-TSS-04-035-06-BA-S6	6	BA
	0.039 (1.00)	M-TSS-04-100-04-BA-S6	4	BA
	0.039 (1.00)	M-TSS-04-100-04-EP-S6	4	EP
	0.049 (1.24)	M-TSS-04-049-06-BA-S6	6	BA
	0.065 (1.65)	M-TSS-04-065-06-BA-S6	6	BA
3/8	0.035 (0.89)	M-TSS-06-035-06-BA-S6	6	BA
	0.039 (1.00)	M-TSS-06-100-04-BA-S6	4	BA
	0.039 (1.00)	M-TSS-06-100-04-EP-S6	4	EP
	0.049 (1.24)	M-TSS-06-049-06-BA-S6	6	BA
	0.065 (1.65)	M-TSS-06-065-06-BA-S6	6	BA
1/2	0.035 (0.89)	M-TSS-08-035-06-BA-S6	6	BA
	0.039 (1.00)	M-TSS-08-100-04-BA-S6	4	BA
	0.039 (1.00)	M-TSS-08-100-04-EP-S6	4	EP
	0.049 (1.24)	M-TSS-08-049-06-BA-S6	6	BA
	0.065 (1.65)	M-TSS-08-065-06-BA-S6	6	BA
5/8	0.035 (0.89)	M-TSS-10-035-06-BA-S6	6	BA
	0.049 (1.24)	M-TSS-10-049-06-BA-S6	6	BA
3/4	0.035 (0.89)	M-TSS-12-035-06-BA-S6	6	BA
	0.049 (1.24)	M-TSS-12-049-04-BA-S6	4	BA
	0.049 (1.24)	M-TSS-12-049-04-EP-S6	4	EP
	0.049 (1.24)	M-TSS-12-049-06-BA-S6	6	BA
	0.065 (1.65)	M-TSS-12-065-06-BA-S6	6	BA
7/8	0.065 (1.65)	M-TSS-14-150-06-BA-S6	6	BA
1	0.049 (1.24)	M-TSS-16-049-06-BA-S6	6	BA
	0.065 (1.65)	M-TSS-16-065-04-BA-S6	4	BA
	0.065 (1.65)	M-TSS-16-065-04-EP-S6	4	EP
	0.065 (1.65)	M-TSS-16-065-06-BA-S6	6	BA
	0.083 (2.11)	M-TSS-16-083-06-BA-S6	6	BA
1-1/4	0.049 (1.24)	M-TSS-20-049-06-BA-S6	6	BA
	0.065 (1.65)	M-TSS-20-065-06-BA-S6	6	BA
	0.083 (2.11)	M-TSS-20-083-06-BA-S6	6	BA
1-1/2	0.065 (1.65)	M-TSS-24-065-06-BA-S6	6	BA
	0.083 (2.11)	M-TSS-24-083-06-BA-S6	6	BA
2	0.083 (2.11)	M-TSS-32-083-06-BA-S6	6	BA

Metric Stainless Steel Seamless Tubing

Tube O.D mm	Thickness mm Tube Wall	Ordering Number	Length, m	Grade
4	1.0	M-TSS-04M-100-06-BA-S6	6	BA
6	1.0	M-TSS-06M-100-06-BA-S6	6	BA
8	1.0	M-TSS-08M-100-06-BA-S6	6	BA
	1.5	M-TSS-08M-150-06-BA-S6	6	BA
10	1.0	M-TSS-10M-100-06-BA-S6	6	BA
	1.5	M-TSS-10M-150-06-BA-S6	6	BA
12	1.0	M-TSS-12M-100-06-BA-S6	6	BA
	1.5	M-TSS-12M-150-06-BA-S6	6	BA
15	1.5	M-TSS-15M-150-06-BA-S6	6	BA
16	1.5	M-TSS-16M-150-06-BA-S6	6	BA
20	1.5	M-TSS-20M-150-06-BA-S6	6	BA

Suggested Allowable Working Pressure for Stainless Steel Tubing

Fully annealed 304 or 316 high quality seamless steel tube to ASTM A269 or equivalent.
Hardness : HRB80 or less

Tube O.D (inch)	Tube Wall Thickness (inch)															
	0.010	0.012	0.014	0.016	0.020	0.028	0.035	0.049	0.065	0.083	0.095	0.109	0.120	0.134	0.156	0.188
1/16	5,600	6,800	8,100	9,400	12,000											
1/8						8,500	10,900					Working pressure (psig)				
3/16						5,400	7,000	10,200								
1/4						4,000	5,100	7,500	10,200							
5/16							4,000	5,800	8,000							
3/8							3,300	4,800	6,500	7500						
1/2							2,600	3,700	5,100	6,700						
5/8		For gas service, applying tube wall thickness should only be selected from the outside of the shaded boundary.						2,900	4,000	5,200	6,000					
3/4								2,400	3,300	4,200	4,900	5,800				
7/8								2,000	2,800	3,600	4,200	4,800				
1									2,400	3,100	3600	4,200	4,700			
1-1/4										2,400	2,800	3,300	3,600	4,100	4,900	
1-1/2											2,300	2,700	3,000	3,400	4,000	4,900
2												2,000	2,200	2,500	2,900	3,600

Tube O.D (mm)	Tube Wall Thickness (mm)														
	0.3	0.8	1.0	1.2	1.5	1.8	2.0	2.2	2.5	2.8	3.0	3.5	4.0	4.5	5.0
2	210	660													
3		670									Working pressure (bar)				
4		500	660												
6		310	420	540	710										
8			310	390	520										
10			240	300	400	510	580								
12			200	250	330	410	470								
14			160	200	270	340	380	430							
15			150	190	250	210	360	400							
16				170	230	290	330	370	400						
18				150	200	260	290	320	370						
20				140	180	230	260	290	330	380					
22				140	180	200	230	260	300	340					
25						180	200	230	260	290	320				
28							180	200	230	260	280	330			
30		For gas service, applying tube wall thickness should only be selected from the outside of the shaded boundary.					170	180	210	240	260	310			
32							160	170	200	220	240	290	330		
38								140	160	190	200	240	270	310	
50											150	180	210	240	270

- Allowable working pressures are calculated from as S value of 20,000 psi (137.8 MPa) for ASTM A269 tubing at -20 to 100°C (-28 to 37°C), as listed in ASME B 31.3 and ASME B31.1.
- Pressure calculations are based on maximum O.D and minimum wall thickness without allowance for corrosion and erosion.
- To determine bar, multiply psig by 0.0689 / To determine psig, multiply bar by 14.51. / To determine kPa, multiply psig by 6.89.
- For welded tubing, the following derating rate to be applied to weld integrity.
  - for single seam welded tubing, multiply by 0.80
  - for double seam welded tubing, multiply by 0.85

S-LOK®

KEYSUNG METAL Manual Valves

The best partner for value creation
We support the innovations of customers

07

Catalogue No. S-LOK Mar.2024

Certification

ISO 45001, ISO 9001, ISO 14001, API 6D, API 600

F.E(Fugitive Emission)

Gate, Globe Valves

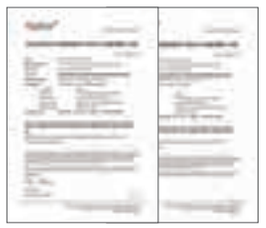

UL

Gate, Globe, Swing / Dual Check
Floating / Trunnion Mounted Ball
Double Offset / Concentric Butterfly
Post Indicator Gate Valves

Fire Safety Test

Gate, Globe, Cryogenic Gate
Floating / Trunnion Mounted Ball Valves

T.A.T (Type Acceptance Test)

Gate, Globe, Swing Check
Floating / Trunnion Mounted Ball Valves

CE PED

Gate, Globe, Swing / Dual / Lift Check, Angle
Floating / Trunnion Mounted Ball Valves

SIL(Safety Integrity Level 2)

Gate, Gate+Actuator
Floating / Trunnion Mounted Ball Valves

KOGAS (KOREA Gas Safety Corporation)

Customers

End User Company

Foreign EPC & Shipbuilding

Korean EPC

Cryogenic Valves

Production Range

Available Products : Gate, Globe, Check, Ball valves
Pressure Rating : ASME CLASS 150 to CLASS 2500
Service Temperature : Down to -196℃
Available Size : NPS 2" to 30" (DN50 to DN750)

Material

Stainless Steel	ASTM A351 - CF8, CF8M, CF3 or Equivalent
Duplex Stainless Steel	ASTM A995 - 1A, 2A, 4A, 5A or Equivalent

Standard Features

Long extended bonnet
Low fugitive emission packing
Fire safe design

Optional Features

Locking device
Special packing option

Design Standards

Design Code : BS 6364/MSS SP-134
Face to Face : ASME B16.10
End Flange : ASME B16.5 & ASME B16.47
BW End : ASME B16.25
Test : API 598/ISO 5208

Cryogenic Valves

Cryogenic Valves are used in storage and transport of liquefied gases such as LNG, LN2 and Oxygen in the piping systems.

Cryogenic Test

Attach blind flange to both flanges of the valve, and connect thermocouple.
Fill the test valve up to the top of its bonnet joint flange with coolant medium.
Keep the valve in the liquefied nitrogen container at least 1 hour until the temperature of the valve body and bonnet are stabilized.
Perform the test of opening/closing a valve.
Completely close the valve and maintain it with test pressure by adjusting the gas regulator.
Maintain the pressurized state for 5 minutes and measure leakage with a measuring cylinder and record the result.

Ambient Temperature Restoration Test

Valve leakage shall be checked by the same method of the initial proving test.
The maximum allowable leakage for each valve size shall conform to API 598, Table 6.

- Cryogenic test(-196℃)

- Ambient temperature restoration test

- Helium Leak detector test

- Gasket leakage test

Bronze Valves

Gate Valves

Design Standard : MSS SP-80/BS 5154/BS EN 12288/API 600
Service Temperature : -29℃ to +200℃
Pressure Rating : ASME CLASS 150 to CLASS 300
Available Size : NPS 1/2" to 30" (DN15 to DN750)
Design : UB-ISRS-NPT/FLG, UB-OS&Y-NPT/FLG, BB-OS&Y-FLG

Check Valves

Design Standard : MSS SP-80/BS 5154/BS 1868/API 6D/API 594
Service Temperature : -29℃ to +200℃
Pressure Rating : ASME CLASS 150 to CLASS 300
Available Size : NPS 1/2" to 30" (DN15 to DN750)
Design : SC (Y pattern)-NPT, UC-NPT/FLG, BC-FLG
Wafer/Lug/Double flanged

Globe Valves

Design Standard : MSS SP-80/BS 5154/BS 1873/API 623
Service Temperature : -29℃ to +200℃
Pressure Rating : ASME CLASS 150 to CLASS 300
Available Size : NPS 1/2" to 24" (DN15 to DN600)
Design : UB-ISRS-NPT/FLG, BB-OS&Y-FLG

Bronze Valves

Ball Valves

Design Standard : API 6D/ISO 14313/ISO 17292 etc.
Service Temperature : -29℃ to +200℃
Pressure Rating : ASME CLASS 150 to CLASS 300
Available Size : NPS 1/2" to 24" (DN15 to DN600)
Design : Floating-NPT/FLG, Trunnion Mounted-FLG

Butterfly Valves

Design Standard : ASME B16.34/API 609
Service Temperature : -29℃ to +200℃
Pressure Rating : ASME CLASS 150 to CLASS 300
Available Size : NPS 2" to 30" (DN50 to DN750)
Design : Concentric (Wafer/Semi-lug/Lug/Flange)
Double offset (High performance)

Material

Bronze	ASTM B148 - C95800
	ASTM B62 , B61 or Equivalent

UL Listed Valves

Gate Valves

UL Standard : UL 262
UL Rated Pressure : Up to 300psig
Pressure Rating : ASME CLASS 150 to CLASS 300
Available Size : NPS 1/2" to 30" (DN15 to DN750)
Design : UB-OS&Y-NPT/FLG
BB-OS&Y-FLG

Ball Valves

UL Standard : UL 1091B
UL Rated Pressure : Up to 300psig
Pressure Rating : ASME CLASS 150 to CLASS 300
Available Size : NPS 2" to 24" (DN50 to DN600)
Design : Floating-NPT/FLG
Trunnion Mounted-FLG

Globe Valves

UL Standard : UL 258
UL Rated Pressure : Up to 300psig
Pressure Rating : ASME CLASS 150 to CLASS 300
Available Size : NPS 2" (DN50)
Design : BB-OS&Y-FLG

Butterfly Valves

UL Standard : UL 1091
UL Rated Pressure : Up to 300psig
Pressure Rating : ASME CLASS 150 to CLASS 300
Available Size : NPS 2" to 30" (DN50 to DN750)
Design : Concentric (Wafer/Semi-lug/Lug/Flange)
Double offset (High performance)

Check Valves

UL Standard : UL 312
UL Rated Pressure : Up to 300psig
Pressure Rating : ASME CLASS 150 to CLASS 300
Available Size : NPS 2" to 24" (DN50 to DN600)
Design : BC-FLG
Lug Double flanged




UL Listed Valves

Post Indicator Valves

UL Standard : UL 262/UL 789/AWWA
UL Rated Pressure : Up to 300psig
Pressure Rating : ASME CLASS 150 to CLASS 300
Available Size : NPS 2" to 30" (DN50 to DN750)
Design : BB-IS-NRS-FLG
Metal seat/Resilient seat
Adjustable indicator post

Material

Ductile iron	ASTM A395 65-45-15 ASTM A395 60-40-18
Bronze	ASTM B148 - C95800 ASTM B62 , B61 or Equivalent

Floating Ball Valves

Production Range

Pressure Rating : ASME CLASS 150 to CLASS 1500
Service Temperature : Up to +500℃
Available Size : NPS 1/2" to 10" (DN15 to DN250)

Standard Features

Full port or Reduce port design
Two piece split body
Seat : PTFE, RPTFE, PEEK, DEVLON V
Self-Relief seat
Anti blow-out proof stem
Anti-satic device
ISO 5211 Mounting flange
Fire safe design

Optional Features

MESC-T.A.T
UL/FM
CE 2014/68/EU(PED)
Locking device
Special packing option
Low emission control
Bonnet extension stem
High temperature service (Metal seat)

Design Standards

Design Code : ASME B16.34/BS 5351/API 6D/
ISO 14313/ISO 17292/MSS-SP-110
Face to Face : ASME B16.10
End Flange : ASME B16.5
BW End : ASME B16.25
NPT : ASME B1.20.1
Test : API 598/BS EN 12266/API 6D/ISO 5208
Fire Safety Test : API 607/ API 6FA

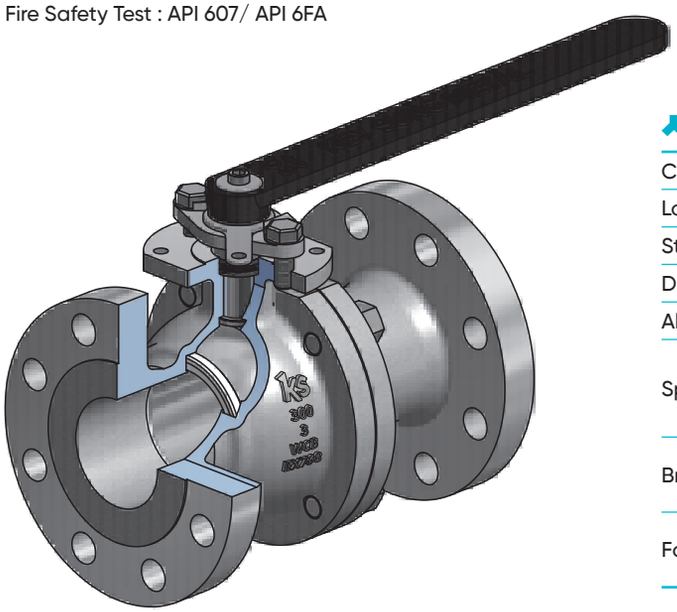

Material

Carbon steel	ASTM A216 - WCB or Equivalent
Low temp. Carbon steel	ASTM A352 - LCC, LCB or Equivalent
Stainless steel	ASTM A351 - CF8, CF8M, CF3 orEquivalent
Duplex stainless steel	ASTM A995 - 1A, 2A, 4A, 5A or Equivalent
Alloy steel	ASTM A217 - WC9, C5, C12 or Equivalent
Special alloy steel	Inconel 625, 825 or Equivalent Hastelloy C Monel or Equivalent
Bronze	ASTM B148 - C95800 ASTM B62 , B61 or Equivalent
Forged Steel	ASTM A105N or Equivalent ASTM A182 Grade Etc or Equivalent

Trunnion Mounted Ball Valves

Production Range

Pressure Rating : ASME CLASS 150 to CLASS 2500
Service Temperature : Up to +500℃
Available Size : NPS 1-1/2" to 48" (DN40 to DN1200)

Standard Features

Full port or Reduce port design
Two piece or Three piece body
Seat : PTFE, RPTFE, PEEK, DEVLON V
Secondary fire safe metal to metal seat
DBB(Double Block and Bleed)
Single/Double piston seat
Leakage rate Class V
Anti blow-out proof stem
Anti-static device
ISO 5211 Mounting flange
Fire safe design

Optional Features

MESC-T.A.T
UL/FM
CE 2014/68/EU(PED)
Locking device
Special packing option
Low emission control
Bonnet extension stem
High temperature service (Metal seat)
Emergency sealant injection

Design Standards

Design Code : ASME B16.34/API 6D/ISO 14313
Face to Face : ASME B16.10
End Flange : ASME B16.5 & ASME B16.47
BW End : ASME B16.25
Test : API 598/BS EN 12266/API 6D/ISO 5208
Fire Safety Test : API 607/ API 6FA

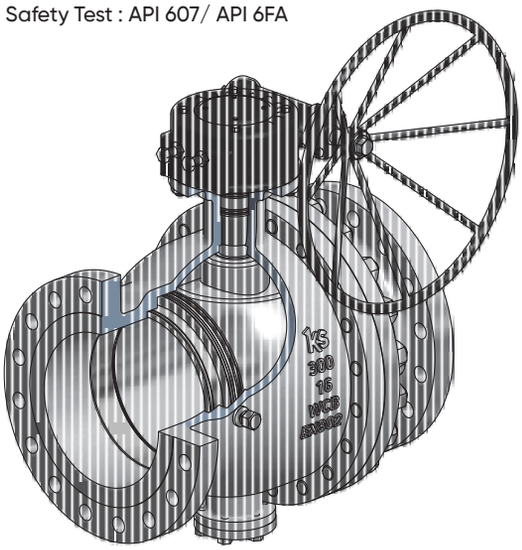

Material

Carbon steel	ASTM A216 - WCB or Equivalent
Low temp. Carbon steel	ASTM A352 - LCC, LCB or Equivalent
Stainless steel	ASTM A351 - CF8, CF8M, CF3 or Equivalent
Duplex stainless steel	ASTM A995 - 1A, 2A, 4A, 5A or Equivalent
Alloy steel	ASTM A217 - WC9, C5, C12 or Equivalent
Special alloy steel	Inconel 625, 825 or Equivalent Hastelloy C Monel or Equivalent
Bronze	ASTM B148 - C95800 ASTM B62 , B61 or Equivalent
Forged Steel	ASTM A105N or Equivalent ASTM A182 Grade Etc or Equivalent

Top Entry Ball Valves

Production Range

Pressure Rating : ASME CLASS 150 to CLASS 2500
Service Temperature : Up to +500℃
Available Size : NPS 1/2" to 10" (DN15 to DN250)

Standard Features

Full port or Reduce port design
Floating or Trunnion Mounted Ball
Seat : PTFE, RPTFE, PEEK, DEVLON V
DBB(Double Block and Bleed)
Cavity pressure self-relief
Single/Double Piston seat
Anti blow-out proof stem
Anti-static device
ISO 5211 Mounting flange
Fire safe design

Optional Features

Locking device
Special packing option
Low emission control
Bonnet extension stem
High temperature service (Metal seat)
Emergency sealant injection

Design Standards

Design Code : ASME B16.34/API 6D/ISO 14313/ISO 17292
Face to Face : Manufacture Standard
End Flange : ASME B16.5
BW End : ASME B16.25
NPT : ASME B1.20.1
Test : API 598/BS EN 12266/API 6D
Fire Safety Test : API 607/ API 6FA

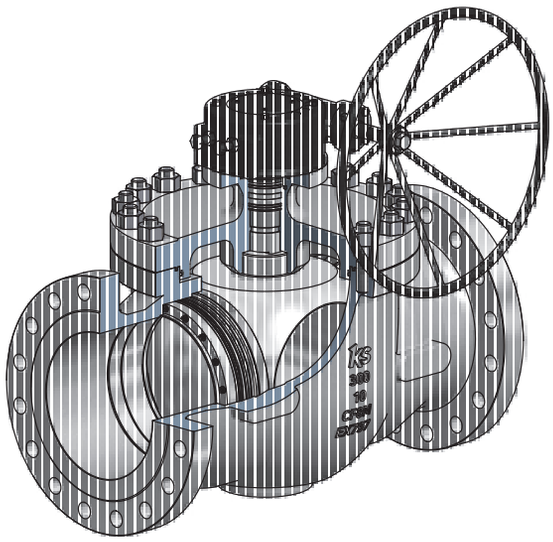

Material

Carbon steel	ASTM A216 - WCB or Equivalent
Low temp. Carbon steel	ASTM A352 - LCC, LCB or Equivalent
Stainless steel	ASTM A351 - CF8, CF8M, CF3 or Equivalent
Duplex stainless steel	ASTM A995 - 1A, 2A, 4A, 5A or Equivalent
Alloy steel	ASTM A217 - WC9, C5, C12 or Equivalent
Special alloy steel	Inconel 625, 825 or Equivalent Hastelloy C Monel or Equivalent
Bronze	ASTM B148 - C95800 ASTM B62 , B61 or Equivalent

Double Block & Bleed Ball Valves

Production Range

Pressure Rating : ASME CLASS 150 to CLASS 2500
Service Temperature : Up to +500℃
Available Size : NPS 1/2" to 12" (DN15 to DN300)

Standard Features

Full port or Reduce port design
Three piece split body
Trunnion Mounted Ball
Seat : PTFE, RPTFE, PEEK, DEVLON V
Anti blow-out proof stem
Anti-static device
ISO 5211 Mounting flange
Fire safe design

Optional Features

Locking device
Special packing option
Low emission control
Bonnet extension stem
High temperature service (Metal seat)
Emergency sealant injection

Design Standards

Design Code : ASME B16.34/API 6D/ISO 14313/ISO 17292
Face to Face : Manufacture Standard
End Flange : ASME B16.5
BW End : ASME B16.25
Test : API 598/BS EN 12266/API 6D
Fire Safety Test : API 607/ API 6FA

Material

Carbon steel	ASTM A216 - WCB or Equivalent
Low temp. Carbon steel	ASTM A352 - LCC, LCB or Equivalent
Stainless steel	ASTM A351 - CF8, CF8M, CF3 or Equivalent
Duplex stainless steel	ASTM A995 - 1A, 2A, 4A, 5A or Equivalent
Bronze	ASTM B148 - C95800
Forged Steel	ASTM A105N or Equivalent ASTM A182 Grade Etc or Equivalent

Three-Way Ball Valves

Production Range

Pressure Rating : ASME CLASS 150 to CLASS 600
Service Temperature : Up to +500℃
Available Size : NPS 1/2" to 8" (DN15 to DN200)

Standard Features

Full port or Reduce port design
Two piece split body
Floating or Trunnion Mounted Ball
Seat: PTFE, RPTFE, PEEK, DEVLON V
L-Port or T-Port
Anti blow-out proof stem
Anti-static device
ISO 5211 Mounting flange
Fire safe design

Optional Features

Locking device
Special packing option
Low emission control
Bonnet extension stem
High temperature service (Metal seat)
Emergency sealant injection

Design Standards

Design Code : ASME B16.34/API 6D/ISO 14313/ISO 17292
Face to Face : Manufacture Standard
End Flange : ASME B16.5
BW End : ASME B16.25
Test : API 598/BS EN 12266/API 6D
Fire Safety Test : API 607/ API 6FA

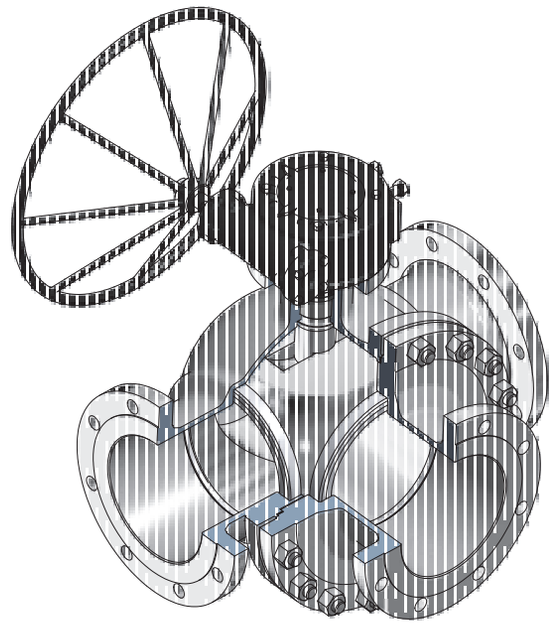

Material

Carbon steel	ASTM A216 - WCB or Equivalent
Low temp. Carbon steel	ASTM A352 - LCC, LCB or Equivalent
Stainless steel	ASTM A351 - CF8, CF8M, CF3 or Equivalent
Duplex stainless steel	ASTM A995 - 1A, 2A, 4A, 5A or Equivalent
Bronze	ASTM B148 - C95800
Forged Steel	ASTM A105N or Equivalent ASTM A182 Grade Etc or Equivalent

Service Conditions of Three-Way Ball Valves

- **L-PORT**

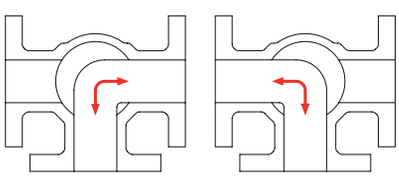

L-01 L-02

- **T-PORT**

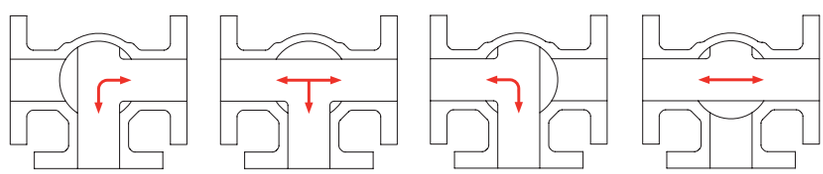

T-01 T-02 T-03 T-04

Gate Valves

Production Range

Pressure Rating : ASME CLASS 150 to CLASS 2500
Service Temperature : Up to +500℃
Available Size : NPS 2" to 64" (DN50 to DN1600)

Standard Features

Full port design
OS & Y (Outside Screw and Yoke)
BB (Bolted Bonnet)
PSB (Pressure Seal Bonnet)
Rising stem and non-rising handwheel
Flexible/Solid wedge
Parallel slide disc type
Flanged or Butt-Welding ends
Fire safe design

Optional Features

MESC-T.A.T
UL/FM
CE 2014/68/EU(PED)
Locking device
Special packing option
Low emission control
Bonnet extension stem

Design Standards

Design Code : ASME B16.34/API 603/API 600/ISO 10434
Face to Face : ASME B16.10
End Flange : ASME B16.5 & ASME B16.47
BW End : ASME B16.25
Test : API 598/ISO 5208

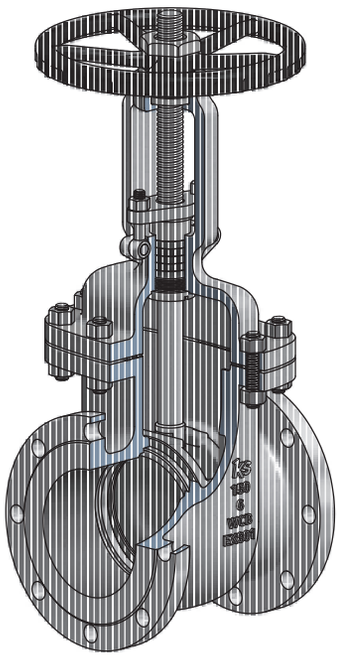

Material

Carbon steel	ASTM A216 - WCB or Equivalent
Low temp. Carbon steel	ASTM A352 - LCC, LCB or Equivalent
Stainless steel	ASTM A351 - CF8, CF8M, CF3 or Equivalent
Duplex stainless steel	ASTM A995 - 1A, 2A, 4A, 5A or Equivalent
Alloy steel	ASTM A217 - WC9, C5, C12 or Equivalent
Special alloy steel	Inconel 625, 825 or Equivalent Hastelloy C Monel or Equivalent
Bronze	ASTM B148 - C95800 ASTM B62 , B61 or Equivalent
Ductile iron	ASTM A395 65-45-15 ASTM A395 60-40-18

Globe Valves

Production Range

Pressure Rating : ASME CLASS 150 to CLASS 2500
Service Temperature : Up to +500℃
Available Size : NPS 2" to 24" (DN50 to DN600)

Standard Features

Full port design
Straight pattern body
OS & Y (Outside Screw and Yoke)
BB (Bolted Bonnet)
PSB (Pressure Seal Bonnet)
Rising stem and handwheel
Plug or Needle disc
Flanged or Butt-Welding ends
Fire safe design

Optional Features

MESC-T.A.T
UL/FM
CE 2014/68/EU(PED)
Locking device
Special packing option
Low emission control
Bonnet extension stem

Design Standards

Design Code : ASME B16.34/API 623/BS 1873
Face to Face : ASME B16.10
End Flange : ASME B16.5
BW End : ASME B16.25
Test : API 598/ISO 5208

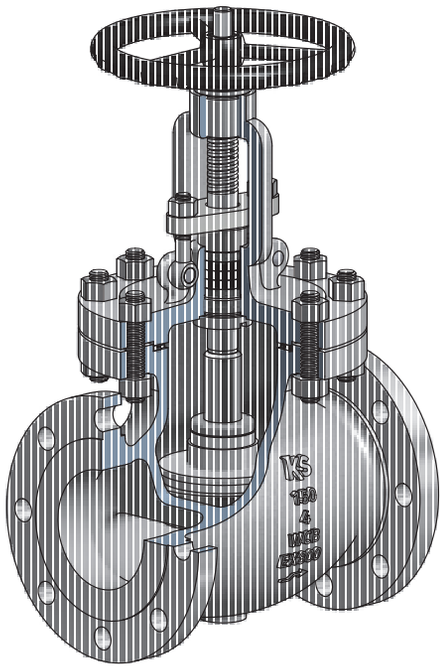

Material

Carbon steel	ASTM A216 - WCB or Equivalent
Low temp. Carbon steel	ASTM A352 - LCC, LCB or Equivalent
Stainless steel	ASTM A351 - CF8, CF8M, CF3 or Equivalent
Duplex stainless steel	ASTM A995 - 1A, 2A, 4A, 5A or Equivalent
Alloy steel	ASTM A2 17 - WC9, C5, C12 or Equivalent
Special alloy steel	Inconel 625, 825 or Equivalent Hastelloy C Monel or Equivalent
Bronze	ASTM B148 - C95800 ASTM B62 , B61 or Equivalent
Ductile iron	ASTM A395 65-45-15 ASTM A395 60-40-18

Check Valves

Production Range

Pressure Rating : ASME CLASS 150 to CLASS 2500
Service Temperature : Up to +500℃
Available Size : NPS 2" to 64" (DN50 to DN1600)

Standard Features

Full port design
BC (Bolted Cover)
PSC (Pressure Seal Cover)
Swing, Tilting, Piston type
Horizontal or Vertical(upward flow) installation
Flanged or Butt-Welding ends
Fire safe design

Optional Features

MESC-T.A.T
UL/FM
CE 2014/68/EU(PED)

Design Standards

Design Code : ASME B16.34/API 594/API 6D/BS 1868
Face to Face : ASME B16.10
End Flange : ASME B16.5 & ASME B16.47
BW End : ASME B16.25
NPT : ASME B1.20.1
Test : API 598/ISO 5208

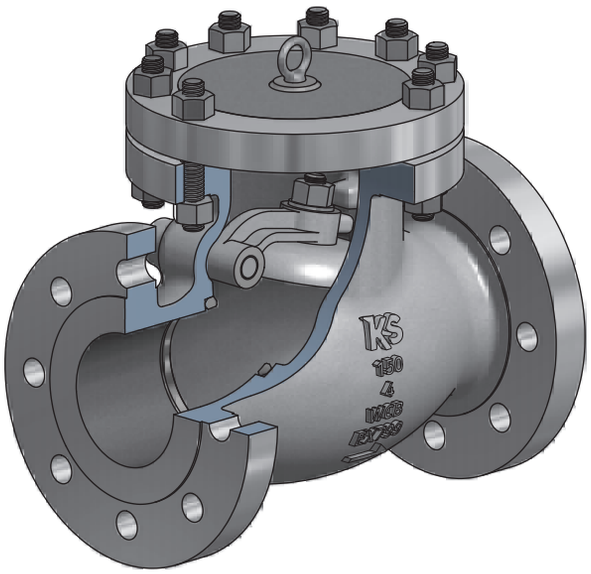

Material

Carbon steel	ASTM A216 - WCB or Equivalent
Low temp. Carbon steel	ASTM A352 - LCC, LCB or Equivalent
Stainless steel	ASTM A351 - CF8, CF8M, CF3 or Equivalent
Duplex stainless steel	ASTM A995 - 1A, 2A, 4A, 5A or Equivalent
Alloy steel	ASTM A995 - 1A, 2A, 4A, 5A or Equivalent
Special alloy steel	Inconel 625, 825 or Equivalent Hastelloy C Monel or Equivalent
Bronze	ASTM B148 - C95800 ASTM B62 , B61 or Equivalent
Ductile iron	ASTM A395 65-45-15 ASTM A395 60-40-18

Dual Plate Check Valves

Production Range

Pressure Rating : ASME CLASS 150 to CLASS 2500
Service Temperature : Up to +500℃
Available Size : NPS 2" to 64" (DN50 to DN1600)

Standard Features

Wafer, Lug, Double flanged, Butt-Welded, Hub end type
Metal or Soft seat
Retainerless design
Quick acting spring
Horizontal or Vertical(upward flow) installation
Fire safe design

Optional Features

MESC-T.A.T
UL/FM
CE 2014/68/EU(PED)

Design Standards

Design Code : ASME B16.34/API 594/API 6D
Face to Face : API 594/API 6D
End Flange : ASME B16.5 & ASME B16.47
BW End : ASME B16.25
Test : API 598/ISO 5208

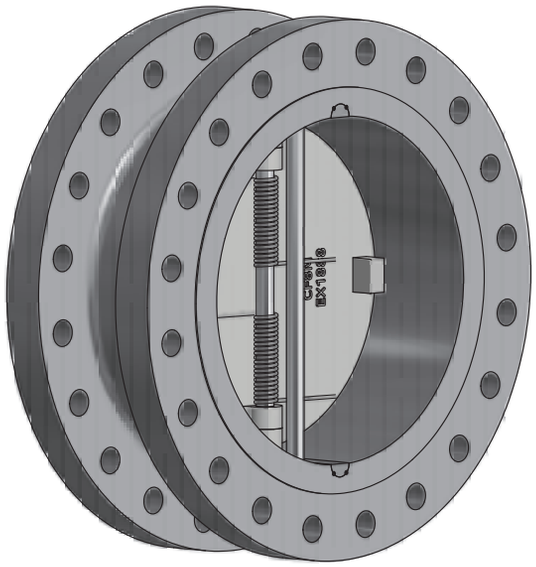

Material

Carbon steel	ASTM A216 - WCB or Equivalent
Low temp. Carbon steel	ASTM A352 - LCC, LCB or Equivalent
Stainless steel	ASTM A351 - CF8, CF8M, CF3 or Equivalent
Duplex stainless steel	ASTM A995 - 1A, 2A, 4A, 5A or Equivalent
Alloy steel	ASTM A217 - WC9, C5, C12 or Equivalent
Special alloy steel	Inconel 625, 825 or Equivalent Hastelloy C Monel or Equivalent
Bronze	ASTM B148 - C95800 ASTM B62 , B61 or Equivalent
Ductile iron	ASTM A395 65-45-15 ASTM A395 60-40-18

Butterfly Valves

Production Range

Pressure Rating : ASME CLASS 150 to CLASS 600
Service Temperature : Up to +500℃
Available Size : NPS 2" to 100" (DN50 to DN2500)

Standard Features

Concentric
Double eccentric
Triple eccentirc
Zero leakage
Wafer, Semi-lug, Lug and Double flanged
Fire safe design

Optional Features

MESC-TAT
UL/FM
Locking device
Special packing option
Low emission control
Stem extension
High performance selection

Design Standards

Design Code : ASME B16.34/API 609
Face to Face : API 609
End Flange : ASME B16.5 & ASME B16.47
BW End : ASME B16.25
Test : API 598/ISO 5208

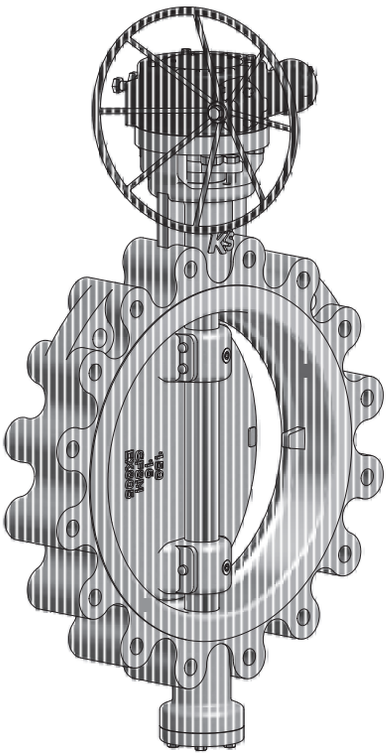

Material

Carbon steel	ASTM A216 - WCB or Equivalent
Low temp. Carbon steel	ASTM A352 - LCC, LCB or Equivalent
Stainless steel	ASTM A351 - CF8, CF8M, CF3 or Equivalent
Duplex stainless steel	ASTM A995 - 1A, 2A, 4A, 5A or Equivalent
Alloy steel	ASTM A217 - WC9, C5, C12 or Equivalent
Special alloy steel	Inconel 625, 825 or Equivalent Hastelloy C Monel or Equivalent
Bronze	ASTM B148 - C95800 ASTM B62 , B61 or Equivalent

Expanding Gate Valves

This type of valve is suitable for on shore and off shore applications where suspended and abrasive solids are present in the fluid or for oil and gas transportation and isolation service.
Expanding Gate Valve are full opening valves with rising stem and Parallel Expanding Gate and segment for tight mechanical seal and positive shut-off, both upstream and downstream and under both low and high differential pressure.
The Double Block and Bleed design offers a proper seal in between both seats and the gate in high and low pressure, for this reason, line pressure is not needed to seal the valve.

Production Range

Pressure Rating : ASME CLASS 150 to CLASS 1500
Service Temperature : Up to +500℃
Available Size : NPS 2" to 36" (DN50 to DN900)

Standard Features

Full port design
OS & Y (Outside Screw and Yoke)
BB (Bolted Bonnet)
Rising stem and non-rising handwheel
Expanding gate design
Secondary sealant injection at seats and stem
DBB(Double Block and Bleed)
Cavity relief system
Flanged or Butt-Welding ends
Fire safe design

Optional Features

MESC-TAT
Locking device
Special packing option
Low emission control
Bonnet extension stem

Design Standards

Design Code : API 6D
Face to Face : ASME B16.10
End Flange : ASME B16.5 & ASME B16.47
BW End : ASME B16.25
Test : API 6D

Material

Carbon steel	ASTM A216 - WCB or Equivalent
Low temp. Carbon steel	ASTM A352 - LCC, LCB or Equivalent
Stainless steel	ASTM A351 - CF8, CF8M, CF3 or Equivalent
Duplex stainless steel	ASTM A995 - 1A, 2A, 4A, 5A or Equivalent
Alloy steel	ASTM B148 - C95800
Special alloy steel	Inconel 625, 825 or Equivalent Hastelloy C Monel or Equivalent

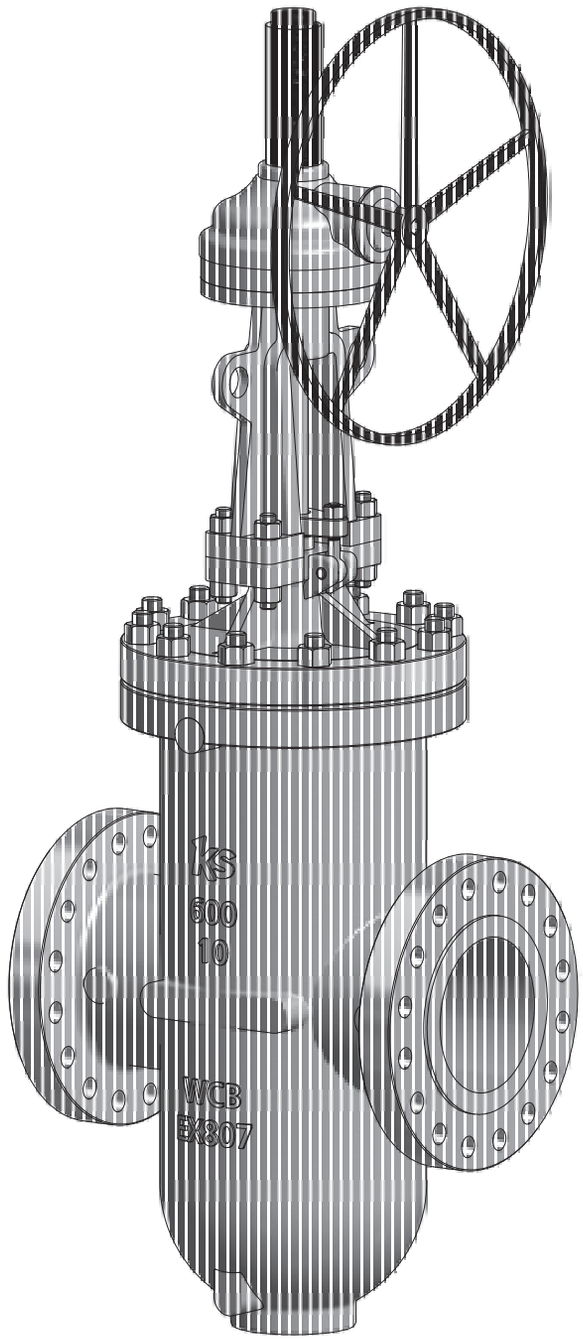

Bellows Seal Valves

Bellows Seal Valves provide the highest fugitive emission protection for use of non-chemical processing.
This design features a full safety sealing system enabled by multiple bellows.

Production Range

Pressure Rating : ASME CLASS 150 to CLASS 600
Service Temperature : Up to +500℃
Available Size : NPS 2" to 24" (DN50 to DN600)

Standard Features

Long life cycle multi-ply bellows
Bellows are available in Stainless steel, Inconel, Hastelloy-C and Monel.
Two secondary stem seals
Superior seat surfaces

Optional Features

Locking device
Special packing option
Low emission control
Bonnet extension stem

Design Standards

Design Code : ASME B16.34/MSS SP-117
Face to Face : ASME B16.10
End Flange : ASME B16.5 & ASME B16.47
BW End : ASME B16.25
Test : API 598/ISO 5208

Material

Carbon steel	ASTM A216 - WCB or Equivalent
Low temp. Carbon steel	ASTM A352 - LCC, LCB or Equivalent
Stainless steel	ASTM A351 - CF8, CF8M, CF3 or Equivalent
Duplex stainless steel	ASTM A995 - 1A, 2A, 4A, 5A or Equivalent
Alloy steel	ASTM A217 - WC9, C5, C12 or Equivalent
Special alloy steel	Inconel 625, 825 or Equivalent Hastelloy C Monel or Equivalent

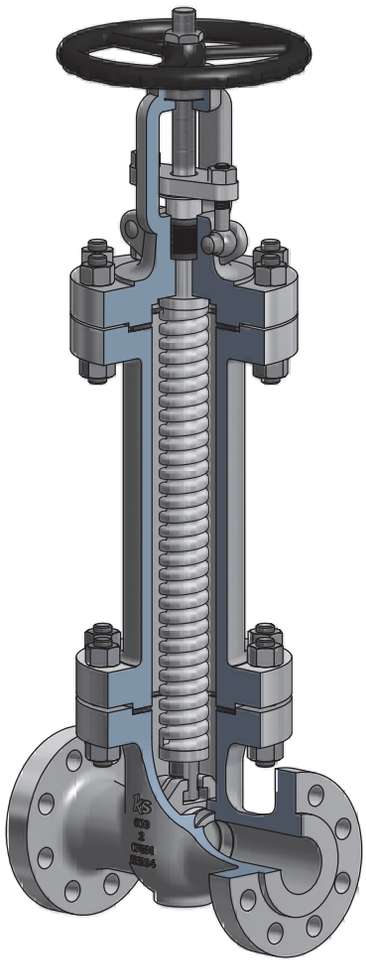

S-LOK® Global Network

EUROPE

Sweden, Norway, Denmark, Netherlands, Germany, Switzerland, Hungary, Italy, Russia, Spain, Czech Republic, Ukraine, France, Greece

MIDDLE EAST

Turkey, Israel, Egypt, Kuwait, UAE, Saudi Arabia, Iran, Oman

ASIA

China, India, Singapore, Malaysia, Vietnam, Indonesia, Thailand, Taiwan, Japan, Korea

OCEANIA

Australia, New Zealand

AMERICA

United States, Canada, Mexico, Chile, Brazil

Africa

South Africa

Certificate List

DNV | BV | Lloyd's | CCS | RMRS

KR | NK | ABS | TR-CU (EAC) | ECE R110

Certification

ISO 9001:2015, ISO 14001:2015 ISO 45001:2018

ABS

S-LOK Tube, JIS B2351, DIN 2353 Fittings

BUREAU VERITAS

S-LOK Tube, JIS B2351, DIN 2353 Fittings

KR

S-LOK Tube, JIS B2351, DIN 2353 Fittings

Class NK

S-LOK Tube, JIS B2351, DIN 2353 Fittings

CCS

S-LOK Tube, JIS B2351, DIN 2353 Fittings

Lloyd's Register

S-LOK Tube, JIS B2351, DIN 2353 Fittings

DNV

S-LOK Tube, JIS B2351, DIN 2353 Fittings,
37° Flare fittings

RMRS

S-LOK Tube, JIS B2351, DIN 2353 Fittings

TR-CU

SFI30, SFT60 SERIES

HSB

Valves (Including Safety Valves), Condensate Pots,
Air Distribution Manifolds

EAC TR TC 032/2013

S-LOK Tube, JIS B2351, DIN 2353 Fittings,
37° Flare fittings

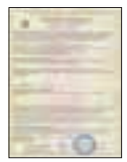

ASTM F1387 TEST

S-LOK Tube Fittings

EC79

SBV(Valve),TFP,TMP(Pipe),IPF(Pipe fittings),
STC(Connector),TTU(Union)

CRN

S-LOK Tube, Instrument Pipe Fittings /
SBV30, SCV30, SNV50, SRV60 Series Valve

ISO 15500_CNG/NGV

S-LOK Tube Fittings / SBLV, SPUV, SFT60, SBVC, SFBVC,
STBVC SERIES(CNG Application)

ECE R110_CNG/NGV

S-LOK Tub Fittings / SBLV, SPUV, SFT60,
SCH, SBVC, SFBVC, STBVC SERIES

NGV3.1_CNG/NGV

S-LOK Tube Fittings / SBLV, SPUV, SBVC,
SFBVC, STBVC, SCH, SFT60 SERIES

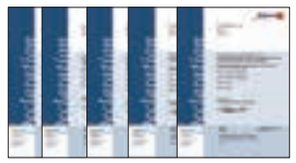

Tubing O.D Size, mm

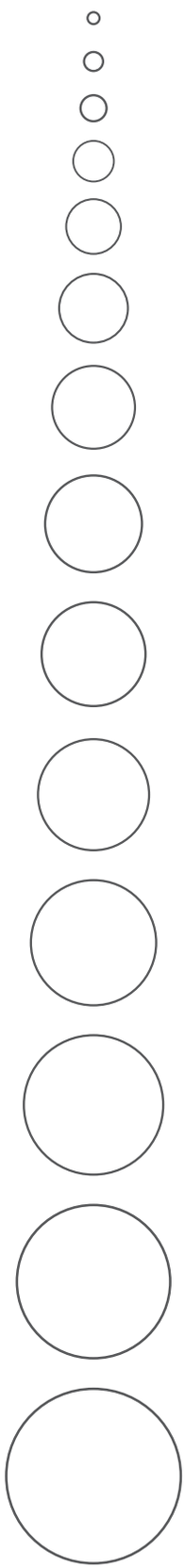

Tubing O.D Size, inch

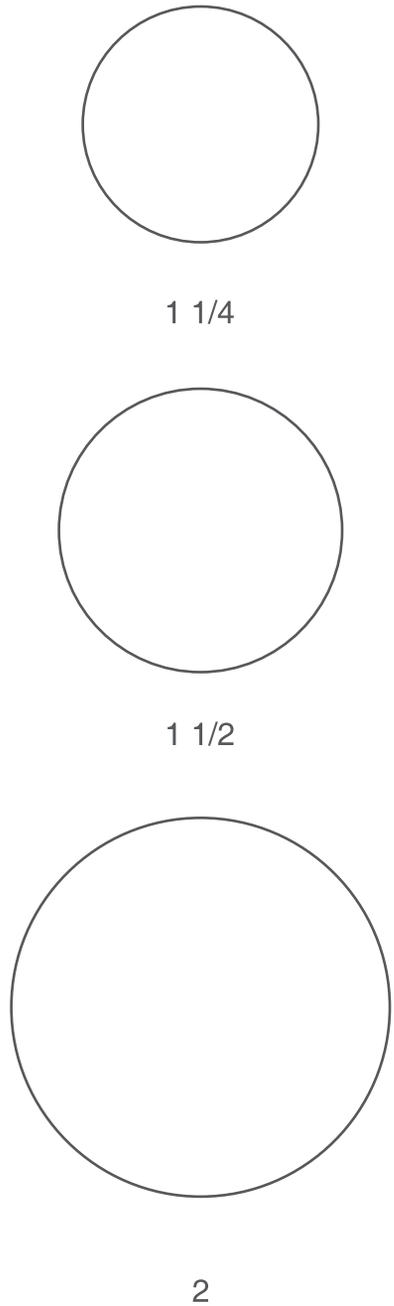

Tubing O.D Size, inch

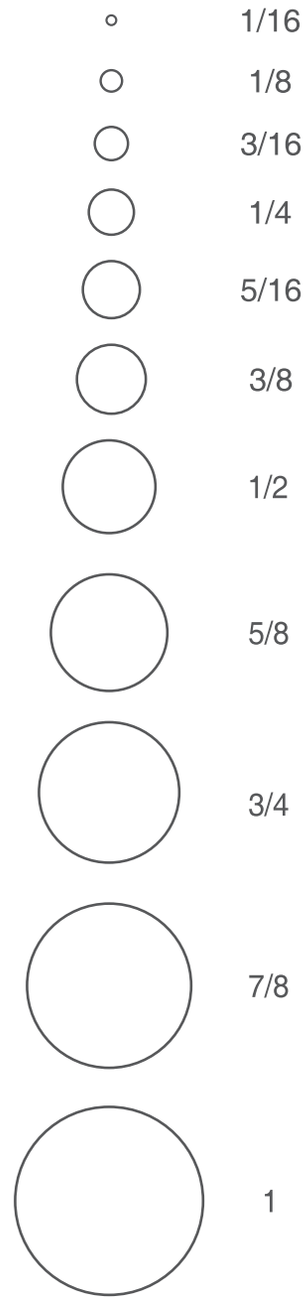

NPT Thread

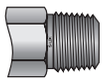

1/16”-27

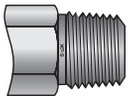

1/18”-27

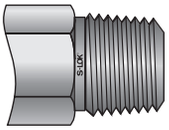

1/4”-18

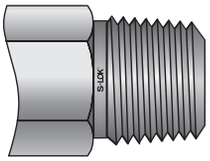

3/8”-18

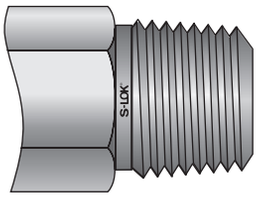

1/2”-14

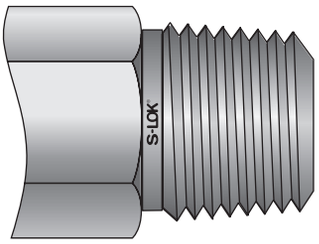

3/4”-14

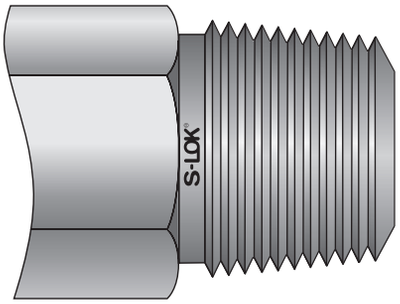

1”-11.5

SAE/MS Straight Thread

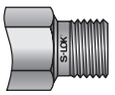

5/16”-24

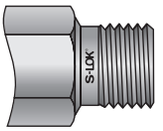

7/16”-20

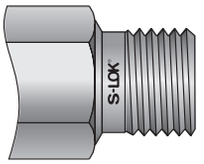

9/16”-18

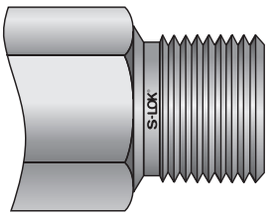

3/4”-16

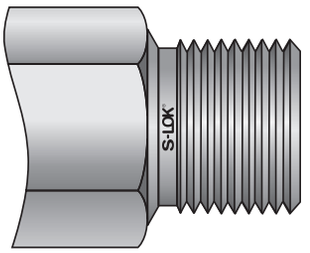

7/8”-14

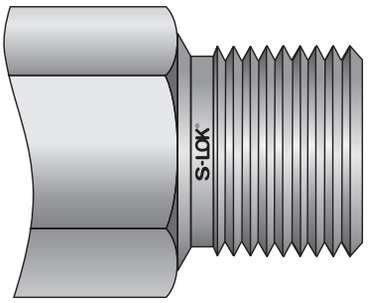

1-1/16”-12

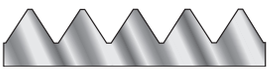

ASME B1.20.1

Taper angle : 1˚ 47’
Thread angle : 60˚
Truncation of root and crest are flat

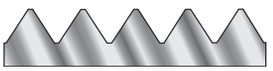

ASME B1.1

Thread angle : 60˚
Truncation of root and crest are flat

NPT Thread

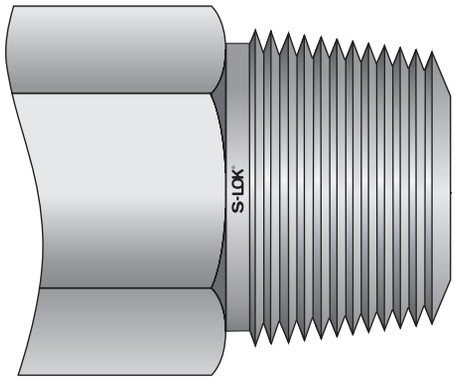

1 1/4”-11.5

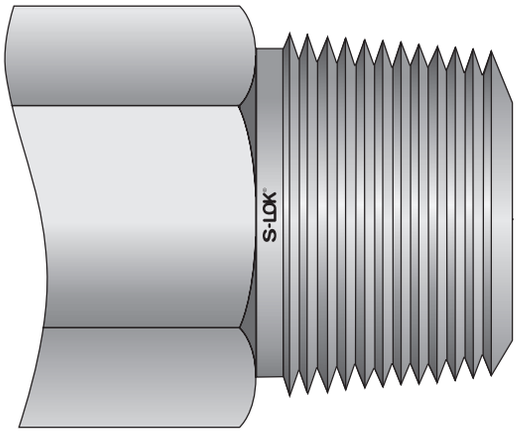

1 1/2”-11.5

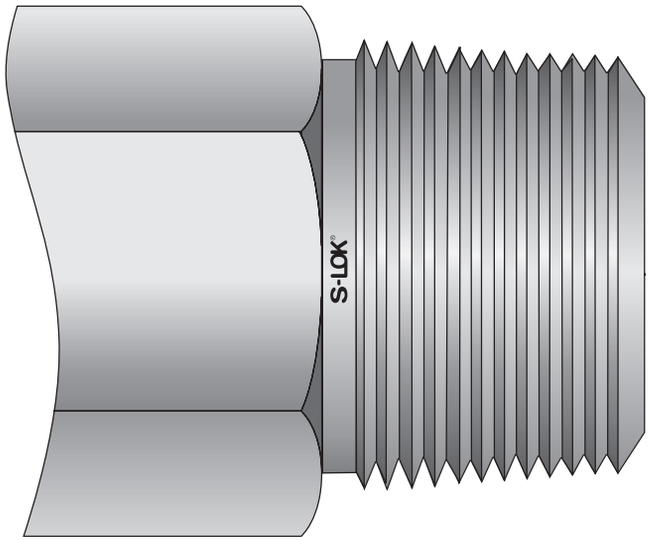

2”-11.5

ISO Tapered Thread (PT)

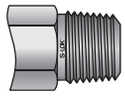
1/8”-28

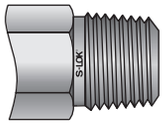
1/4”-19

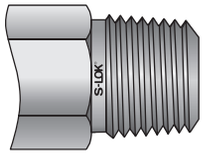
3/8”-19

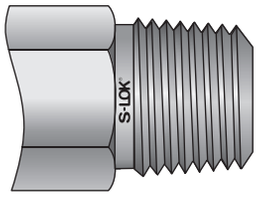
1/2”-14

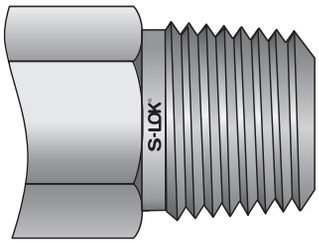
3/4”-14

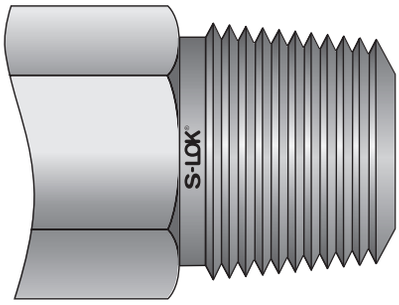
1”-11

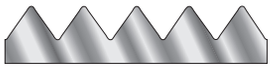

ISO 7/1

Taper angle : 1° 47’
Thread angle : 55°
Truncation of root and crest are round

ISO Parallel Thread (PF)

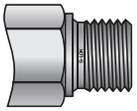
1/8”-28

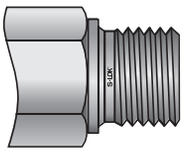
1/4”-19

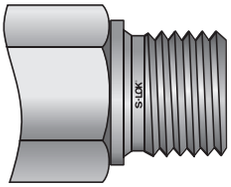
3/8”-19

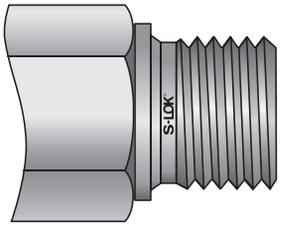
1/2”-14

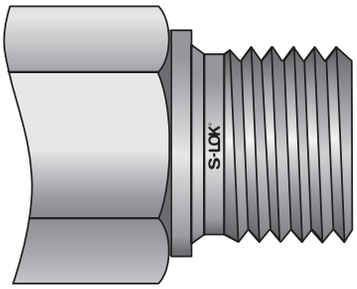
3/4”-14

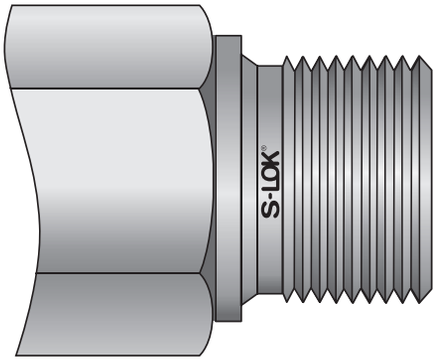
1”-11

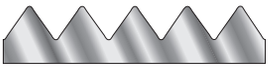

ISO 228/1

Thread angle : 60°
Truncation of root and crest are round


B-LOK
B-LOK

We Support the Customer's innovation.